# CITY OF GRANITE FALLS

**SNOHOMISH COUNTY** **WASHINGTON**

GRANITE FALLS

# DEVELOPER STANDARDS

**ADOPTED: DECEMBER 21, 2016**
**ORDINANCE NO.: 920-2016**

**REVISED OCTOBER 2017**
**REVISED APRIL 2018**

**NOVEMBER 2016**

Gray & Osborne, Inc.
CONSULTING ENGINEERS

# TABLE OF CONTENTS


## CHAPTER 1 – INTRODUCTION

## CHAPTER 2 – PERMITS
2.1 PERMIT PROCESS ..... 2-1
2.2 DEVIATIONS ..... 2-2

## CHAPTER 3 – PUBLIC WORKS CONSIDERATIONS
3.1 BONDING ..... 3-1
3.2 HOLD HARMLESS CLAUSE ..... 3-1
3.3 DEVELOPER'S PUBLIC LIABILITY AND PROPERTY DAMAGE INSURANCE ..... 3-2
3.4 COMPENSATION AND EMPLOYER'S LIABILITY INSURANCE ..... 3-5
3.5 NON-INTERFERENCE ..... 3-6
3.6 WORK STANDARDS ..... 3-6

## CHAPTER 4 – GENERAL REQUIREMENTS
4.1 SURVEY STAKING ..... 4-1
4.2 EASEMENTS ..... 4-2
4.3 UTILITY TRENCH EXCAVATION ..... 4-2
4.4 PIPE BEDDING ..... 4-3
4.5 BACKFILLING ..... 4-3
4.6 INSPECTION ..... 4-3
4.7 RECORD DRAWINGS ..... 4-5
4.8 DEVELOPER AGREEMENT REQUIREMENTS ..... 4-6
4.9 ACCEPTANCE OF IMPROVEMENTS ..... 4-6
4.10 FINISHING AND CLEANUP ..... 4-7
4.11 FINAL ACCEPTANCE ..... 4-8

## CHAPTER 5 – STREET AND ASPHALT CONCRETE PATHS AND/OR BIKEWAYS STANDARDS
5.1 GENERAL CONSIDERATIONS ..... 5-1
5.2 STREETS ..... 5-1
5.3 DESIGN STANDARDS ..... 5-4
5.4 STREET NAMES ..... 5-7
5.5 SIGNING ..... 5-7
5.6 STREET FRONTAGE IMPROVEMENTS ..... 5-7
5.7 OFFSITE IMPROVEMENTS ..... 5-8
5.8 DEAD ENDS ..... 5-8
5.9 INTERSECTIONS ..... 5-8
5.10 HALF STREETS ..... 5-9
5.11 DRIVEWAYS ..... 5-9
5.12 SIGHT OBSTRUCTION ..... 5-13
5.13 SUBGRADE PREPARATION ..... 5-14
5.14 CRUSHED SURFACING (BASE AND TOP COURSE) ..... 5-14

5.15 SURFACING REQUIREMENTS ..... 5-15
5.16 TEMPORARY STREET PATCHING ..... 5-16
5.17 TRENCH BACKFILL AND RESTORATION ..... 5-16
5.18 MATERIAL AND CONSTRUCTION TESTING ..... 5-18
5.19 SIDEWALKS, CURBS AND GUTTERS ..... 5-21
5.20 ILLUMINATION ..... 5-24
5.21 SIGNALS ..... 5-25
5.22 ROADSIDE FEATURES ..... 5-25
5.23 PARKING LOTS ..... 5-31
5.24 UTILITIES ..... 5-31
5.25 ASPHALT CONCRETE PEDESTRIAN PATHS AND/OR BIKEWAYS ..... 5-32

## CHAPTER 6 – STORM DRAINAGE STANDARDS

6.1 GENERAL ..... 6-1
6.2 DESIGN STANDARDS ..... 6-1
6.3 CONVEYANCE ..... 6-3
6.4 CONNECTIONS ..... 6-4
6.5 STREET PATCHING AND RESTORATION ..... 6-4
6.6 CLEANING AND TESTING ..... 6-4
6.7 INSPECTION ..... 6-4

## CHAPTER 7 – SANITARY SEWER STANDARDS

7.1 GENERAL ..... 7-1
7.2 DESIGN STANDARDS ..... 7-1
7.3 GENERAL REQUIREMENTS ..... 7-2
7.4 MATERIALS ..... 7-5
7.5 TESTING GRAVITY SEWERS FOR ACCEPTANCE ..... 7-12
7.6 VIDEOTAPING ..... 7-18
7.7 STATE HIGHWAY CROSSINGS ..... 7-19
7.8 STREET PATCHING AND RESTORATION ..... 7-19
7.9 ADJUSTMENT OF NEW AND EXISTING UTILITY STRUCTURES TO GRADE ..... 7-19
7.10 SANITARY SEWER LIFT STATIONS – SUPPLEMENTAL STANDARDS ..... 7-21

## CHAPTER 8 – WATER SYSTEM STANDARDS

8.1 GENERAL ..... 8-1
8.2 DESIGN STANDARDS ..... 8-1
8.3 CONSTRUCTION REQUIREMENTS ..... 8-3
8.4 MATERIALS ..... 8-7
8.5 WATER PIPE TESTING AND DISINFECTING ..... 8-12
8.6 BACKFLOW PREVENTION AND SPRINKLER SYSTEMS ..... 8-14
8.7 SERVICE CONNECTIONS ..... 8-15
8.8 1-1/2-INCH AND LARGER METERS ..... 8-16

## CHAPTER 9 – MISCELLANEOUS UTILITY SERVICES AND ADDITIONAL DEVELOPMENT REQUIREMENTS

9.1 GENERAL ..... 9-1
9.2 UTILITY SERVICES ..... 9-1
9.3 STREET LIGHTING ..... 9-1
9.4 CABLE TELEVISION ..... 9-1
9.5 STREET NAME AND TRAFFIC SIGNS ..... 9-1
9.6 LANDSCAPING ..... 9-2
9.7 EROSION CONTROL ..... 9-2

# LIST OF TABLES


| No. | Table | Page |
|---|---|---|
| 5-1 | Minimum Street Design Standards | 5-5 |
| 5-2 | Design Values for Roads | 5-6 |
| 5-3 | Road Classification for the City of Granite Falls | 5-7 |
| 5-4 | Maximum Residential Driveway Width | 5-11 |
| 5-5 | Testing and Sampling Frequency Guide | 5-18 |
| 8-1 | Water Main Thickness | 8-2 |
| 8-2 | Calcium Hypochlorite (65 Percent Chlorine) Addition Per 100 Feet of Pipe | 8-4 |


# MISCELLANEOUS FORMS


Developer Agreement
Plan Review Checklist
Traffic Impact Analysis Guidelines
Snohomish County Traffic Study Requirements
Performance Bond
Assignment of Funds in Lieu of Performance Bond
Maintenance Bond
Surety Acknowledgement
Corporate Acknowledgement
Assignment of Funds in Lieu of Maintenance Bond
Easement for Utilities
Bill of Sale
Affidavit of No Liens
Agreement for Inspection and Maintenance of Privately Maintained Facilities


# STANDARD DETAILS


Roadway Details
Storm Details
Sanitary Sewer Details
Water Details
Miscellaneous Details

# CHAPTER 1

# INTRODUCTION

These standards shall apply to all improvements within the public right-of-way and/or public easements, to all improvements required within the proposed public right-of-way or easements of new subdivisions, for all improvements intended for ownership, operations or maintenance by the City and for all other improvements (onsite or offsite) for which the City Code requires approval from the City Manager and/or City Planning Commission and/or the City Council. These standards are intended as guidelines for designers and developers in preparing their plans and for the City in reviewing plans. Where minimum values are stated, greater values should be used whenever practical; where maximum values are stated, lesser values should be used where practical. The developer/proponent is however cautioned that higher standards and/or additional studies and/or environmental mitigation measures may, and will, in all likelihood, be imposed by the City when developing on, in, near, adjacent, or tributary to sensitive areas to include, but not be limited to, steep embankments, creeks, ponds, lakes, certain wildlife habitat, unstable soils, etc.

Alternate design standards will be accepted when it can be shown, to the satisfaction of the City, that such alternate standards will provide a design equal to or superior to that specified. In evaluating the alternate design, the City shall consider appearance, durability, ease of maintenance, public safety and other appropriate factors. The City encourages the use of Low Impact Development design.

Any improvements not specifically covered herein by these Standards must meet or exceed the current version of the State of Washington Department of Transportation Standard Specification for Road, Bridge & Municipal Construction, current amendments thereto and the Washington State Department of Transportation Standard Plans. Said specifications shall be referred to hereafter as the "Standard Specifications" and "Standard Plans."

Where improvements are not covered by the Standard Specifications, Standard Plans, or these City standards, the City will be the sole judge in establishing appropriate standards. Where these standards conflict with any existing City ordinances or discrepancies exist within the body of this text, the higher "standards" shall be utilized as determined by the City Administrator.

The designer shall submit calculations or other appropriate materials supporting the design of utilities, pavements and storm drainage facilities. The designer shall submit calculations for structures and other designs when requested by the City Engineer and/or Building Official.

A. Exclusions

1. A one time enlargement of less than 800 square feet of total footprint on any parcel of property, or, a one-time net increase of less than 25 percent of the total aggregate area of the existing footprint(s) of building(s) on the site, whichever is less.

2. Construction or redevelopment of an individual single-family residence on an existing lot.

B. Definitions (As used herein)

1. "City:" City of Granite Falls, Washington, Snohomish County, a municipal corporation, existing under and by virtue of the laws of the State of Washington. Actions designated as taken by the City are the acts of the Council acting through the Mayor, or an approved designee.

2. "City Manager:" The City's duly appointed City Manager, or the designated person.

3. "Contract Documents:" The contract documents shall consist of the following and in case of conflicting provisions, the first mention shall have precedence:

   a. Developers Agreement
   b. City Public Works Standards
   c. Other Applicable City Municipal Codes
   d. City Right-of-Way Use Permit and associated plans
   e. City Fill and Grade Permit and associated plans
   f. WDOE Stormwater Permit (site larger than 1 acre)
   g. Standard Plans
   h. Standard Specifications
   i. SEPA Determination (if required)

   These documents shall form the Contract.

4. "Contractor:" The Developer's contractor or subcontractor.

5. "Developer:" The party having an agreement with the City to cause the installation of certain improvements, to become a part of the City's utility and/or roadway system upon completion and acceptance. The term shall also include the Developer's contractor employed to do the work or the Contractor's employees.

6. "Development:" Any improvement within the public right-of-way and/or public easements (existing or future), improvements intended for ownership, operations or maintenance by the City and all other improvements for which the Granite Falls Municipal Code requires approval by the City. These improvements include, but are not limited to, the construction, reconstruction, conversion, structural alteration, relocation, enlargement, or change in use of any structure or property, or any project that will increase vehicle trips per day or any project which negatively impacts the service level, safety, or operational efficiency of serving roads.

7. "Driveway Approach:" That portion of the public right-of-way used for vehicular access to private property.

8. "Engineer:" The City's Engineer, whether a staff engineer or consultant.

9. "Maintenance Bond:" A bond furnished by the Developer and written by a corporate body qualified to write surety in the State of Washington, guaranteeing that the Developer will repair any defects found in the work within the time period as further identified herein.

10. "Mayor:" Mayor of the City of Granite Falls or his/her authorized representative.

11. "Performance Bond:" A bond furnished by the Developer and written by a corporate body qualified to write surety in the State of Washington, guaranteeing that the work will be completed in accordance with the plans and specifications.

12. "Plans:" Drawings, including reproductions thereof, of the work to be done as an extension to the City's utility or road network system, prepared by an Engineer licensed in the State of Washington.

13. "Operations and Maintenance Supervisor:" The City's utilities superintendent, or operations and maintenance supervisor, or Manager.

14. "Project Specifications:" The specifications specific to the project as designated by an Engineer licensed in the State of Washington for the prescribed work.

15. "Standard Specifications:" The most current edition of the Washington State Department of Transportation Standard Specifications for Road, Bridge and Municipal Construction.

16. "Work:" The labor or materials or both, superintendence, equipment, transportation, and other facilities necessary to complete the Contract.

C. Developer to be Informed: The Developer is expected to be fully informed regarding the nature, quality, and the extent of the work to be done, and, if in doubt, to secure specific instructions from the City.

D. Authority of Mayor: The Mayor or his authorized representative shall have the authority to stop work whenever, in his/her opinion, the same shall be necessary to insure compliance with the plans and specifications, and shall have authority to reject work and materials which do not so conform and to decide questions which may arise in the execution of the work.

E. Authority of the City Manager: The City Manager or his/her authorized representative shall have the authority to determine the amount, quality, acceptability and fitness of the work, material and equipment, and to reject or condemn all work or material which does not conform to the terms of these Standards. The City Manager decision in all matters is the decision of the City, and can only be changed by the City.

The City has not so delegated, and the City Manager or his/her authorized representative(s) does (do) not purport to be a safety expert, is not so engaged in that capacity, and has neither the authority nor the responsibility to enforce construction safety laws, rules, regulations or procedures, or to order the stoppage of work for claimed violations thereof. City inspector(s) are not responsible for the identification or enforcement of such laws, rules or regulations.

F. Payment for City Services: The Developer shall be responsible for promptly reimbursing the City for all costs and expenses incurred by the City in the pursuit of project submittal, review, approval, and construction. These costs include, but are not limited to, the utilization of staff and "other" outside consultants as may be necessitated to adequately review and inspect construction of the project(s). All legal, administrative, and engineering fees for project review, meetings, approvals, site visits, construction inspection, etc., shall be subject to prompt reimbursement. The Developer is cautioned that project approval (City acceptance) and occupancy permits will be denied until all bills are paid in full.

# CHAPTER 2

# PERMITS

## 2.1 PERMIT PROCESS

No person, firm or corporation shall commence work on of any facility located either in the public right-of-way or a public easement without any necessary permit(s) first having been obtained from the City.

Any party requesting a permit shall file written application with the City. Such application will include as needed:

1. Right-of-Way Permit application;

2. Fill and Grade permit application;

3. Completed Bond Quantity Worksheet (for work in existing public right-of-way or public easements);

4. Construction Plans, including City Standard Details as appropriate;

5. Application Fee.

The City may require, at their discretion, the filing of any other information when in their opinion such information is necessary to properly enforce the provisions of these Standards.

No permit shall be issued until the proposed work has been approved by the appropriate official. Adjudication of disagreements regarding approvals shall be made by the Mayor or their designee and his decision shall be final.

No construction plans shall be approved nor a permit issued where it appears that the proposed work, or any part thereof, conflicts with the provisions of these Standards or any other ordinance of the City of Granite Falls, nor shall issuance of a permit be construed as a waiver of any other portion of the Granite Falls Municipal Code.

**A fee of an amount as designated by City code shall accompany all applications for permits.**

## 2.2 DEVIATIONS

These Standards represent appropriate practice under most conditions, based on past experience in Granite Falls and other jurisdictions. They are intended to provide facilities that are safe and appropriate for use in Granite Falls. These Standards are not intended to limit the introduction of new ideas. Situations will arise where alternatives to these Standards may better accommodate existing conditions, overcome adverse topography or allow for more cost-effective solutions without adversely affecting safety, operations, maintenance or aesthetics. As such deviations may be approved only under special circumstances, when such deviation is warranted by unique characteristics of the site or the applicant can clearly show that a deviation will result in an equal or superior product in a cost-effective manner.

Accordingly, requests for deviations from these Standards will be considered by the City Engineer. Such requests must be submitted in writing and include supporting information demonstrating compliance with the following criteria:

- The deviation will achieve the intended result with a comparable or superior design and quality of improvement;
- The deviation will not adversely affect safety, or operations;
- The deviation will not adversely affect maintenance and its associated cost; and
- The deviation will not adversely affect aesthetic appearance.

The need for and timing of a deviation from these standards may not be predictable. Requests should be submitted as soon as the need becomes known. Deviations that affect engineering design, to the extent they are known, must be decided prior to submittal of construction plans. This will prevent wasted effort in the preparation of plans with non-standard features that cannot be approved. Any deviation request concerning a provision of the Uniform Fire Code requires concurrence by Fire District 17. Documentation of concurrence by the Fire District must be submitted with the request.

The City Engineer reserves the right to approve or deny a deviation from these Standards at any time, in the interest of public health, safety and welfare. In accordance with Granite Falls Municipal Code 19.04.110, the applicant may appeal an administrative determination of the City Engineer denying a requested deviation from these Standards to a hearing examiner appointed by the Mayor.

# CHAPTER 3

# PUBLIC WORKS CONSIDERATIONS

## 3.1 BONDING

Developers and contractors performing work within the public right-of-way or publicly owned easement(s) shall be prepared to satisfy the following bonding requirements. The City will accept an assignment of funds as bonds.

A. Furnishing a performance bond that shall be conditioned upon faithful completion of that portion of the work performed pursuant to the permit which will require completion by the City should the permittee or his contractor default. The amount of such bond shall be 150 percent of the amount estimated for work within the existing right-of-way. This performance bond shall be posted as a requirement for receiving a right-of-way permit.

B. Furnishing a performance bond that shall be conditioned upon faithful completion of that portion of the work performed pursuant to the permit which will require completion by the City should the permittee or his contractor default. The amount of such bond shall be 150 percent of the value of the incomplete improvements that are to be dedicated to the City. The City engineer shall review and provide approval, as may be applicable of the submitted amount. The type of work covered in this bond may include, for example, the final lift of asphalt on a roadway. Bonding for the final lift would allow for release of the Performance Bond in Section A and allow the developer to receive construction completion approval prior to completing the final lift.

C. Furnishing a Maintenance Bond. All work shall be guaranteed by the Contractor for a 2-year period from the time of inspection and final approval of the construction by the City. The maintenance bond shall be equal to 15 percent of the total cost of the improvements.

## 3.2 HOLD HARMLESS CLAUSE

The Developer shall indemnify and hold harmless the City, City, Contractors and their agents and employees as specified in the Developer Agreement, from and against all claims damages, losses, and expenses, including attorney's fees, arising out of or resulting from the performance of the work, and shall, after reasonable notice, defend and pay the expense of defending any suit and will pay any judgment, provided that any such claim, damage, loss, or expense: (1) is

attributable to bodily injury, sickness, disease, or death, or to injury or destruction of tangible property (other than the work itself), including the loss of use resulting therefrom; and (2) is caused in whole or in part by any negligent act or omission or by any other action giving rise to strict liability of the Developer, any subcontractor, anyone directly or indirectly employed by any of them, or anyone for whose acts any of them may be liable, regardless of whether or not it is caused in part by a party indemnified hereunder.

In any and all claims against the City or City Engineer, or any of their agents or employees, by any employee of the Developer, any contractor or subcontractor, anyone directly or indirectly employed by any of them, or anyone for whose acts any of them may be liable, the indemnification obligation under this article shall not be limited in any way by any limitation on the amount or type of damages or compensation under workman's compensation acts, disability benefit acts, or other employee's benefit acts.

The obligations of the Developer under this article shall not include the sole negligence of the City or the City Engineer.

## 3.3 DEVELOPER'S PUBLIC LIABILITY AND PROPERTY DAMAGE INSURANCE

The Developer shall not commence work until he has furnished evidence (in duplicate copy) of insurance required hereunder, and such insurance has been approved by the City Attorney; nor shall the Developer allow any contractor or subcontractor to commence work on his contract or subcontract until the same insurance requirements have been complied with by such contractor or subcontractor. Approval of the insurance by the City Attorney shall not relieve or decrease the liability of the Developer thereby.

Companies writing the insurance under this article shall be licensed to do business in the State of Washington or be permitted to do business under the Surplus Line Law of the State of Washington and shall have an A.M. Best rating of no less than A:Vii or equivalent.

The Developer shall maintain, during the life of the work, Comprehensive General and Automobile Liability Insurance, and such other coverage as detailed herein. The insurance shall include, as Additional Named Insured, the City and its Contractors. All insurance policies shall be endorsed to provide that the policy shall not be canceled or reduced in coverage until after 10 days prior written notice, as evidenced by return receipt of registered letter has been given to the City.

Comprehensive General Bodily Injury and Property Damage Insurance shall include:

A. Premises & Operations;

B. Developer's Protective Liability;

C. Products Liability, including Completed Operations Coverage;

D. Contractual Liability;

E. Broad Form Property Damage.

Comprehensive Automobile Bodily Injury and Property Damage Insurance shall include:

A. All owned automobiles;

B. Non-owned automobiles;

C. Hired automobiles.

The insurance coverage's listed above shall protect the Developer from claims for damages for bodily injury, including death resulting therefrom, as well as claims for property damage, which may arise from operations related to the work, whether such operations be by himself or by any subcontractor or by anyone directly employed by either of them, it being understood that it is the Developer's obligation to enforce the requirements of this article as respects any contractor or subcontractor.

Comprehensive General and Automobile Liability Insurance shall provide coverage for both bodily injury and property damage, as follows:

A. Comprehensive General and Automobile Bodily Injury Liability Insurance on an occurrence basis of not less than $1,000,000.00 for bodily injury, sickness or disease, including death resulting therefrom, sustained by each person; and for limits of not less than $1,000,000.00 for each occurrence.

B. Comprehensive General Property Damage Liability Insurance on an occurrence as is for limits of not less than $1,000,000.00 for damage to or destruction of property, including loss of use thereof, arising from each occurrence, and in an amount of not less than $1,000,000.00 in aggregate.

C. Comprehensive Automobile Property Damage Liability Insurance on an occurrence basis for limits of not less than $1,000,000.00 for damage to or destruction of property, including loss of use thereof, arising from each occurrence.

D. Comprehensive Liability Insurance shall include the City and its consultants as Additional Named Insured.

E. Comprehensive General Property Damage Liability Insurance shall include liability coverage for damage to or destruction of property of other, including loss of use of property damaged or destroyed, and all other indirect and consequential damage for which liability exists in connection with such damage to or destruction of property of others, and shall include coverage for:

("X") Injury to or destruction of any property arising out of blasting or explosion;

("C") Injury to or destruction of any property arising out of the collapse of/or structural injury to any building or structure due:

(1) To excavation, including borrowing, filling or backfilling in connection therewith, or tunneling, pile driving, coffer-dam work or caisson work, or

(2) To moving, shoring, underpinning, raising or demolition of any building or structure or removal or rebuilding of any structural support thereof.

("U") 1. Injury to or destruction of wires, conduits, pipes, mains, sewers or other similar property or any apparatus in connection therewith, below the surface of the ground, if such injury or destruction is caused by and occurs during the use of mechanical equipment for the purpose of excavating or drilling, or

2. Injury to or destruction of property at any time resulting therefrom.

There shall be included in the liability insurance, contractual coverage sufficiently broad to insure the provisions of “Hold Harmless Clause.”

Nothing contained in these insurance requirements is to be construed as limiting the extent of the Developer's responsibility for payment of damages resulting from his operations under this Contract.

In the event the Developer is required to make corrections on the premises after the work has been inspected and accepted, he shall obtain, at his own expense, and prior to commencement of any corrective work, full insurance coverage, as specified herein.

The Developer shall furnish, upon request by the City, certified copies of the insurance policy or policies within 2 weeks of the City's request. All policies shall be written on an "occurrence" basis.

When requested, Developer is required to provide for any of its consultants Professional Liability/Errors & Omissions coverage in such amount as specified by City.

When requested, Developer is required to provide builder's risk insurance in such amount as specified by the City.

## 3.4 WORKERS COMPENSATION AND EMPLOYER'S LIABILITY INSURANCE

The Developer shall maintain Workmen's Compensation Insurance or, as may be applicable, Maritime Workmen's Insurance, as required by state or federal statute for all of his employees to be engaged in work on the Project and, in case any such work is sublet, the Developer shall require the contractor or subcontractor similarly to provide Workmen's Compensation Insurance or Maritime Workmen's Insurance for all of the latter's employees to be engaged in such work. The Developer's Labor & Industries account number shall be noted in the Proposal in the space provided.

In the event any class of employees engaged in work at the site of the Project is not covered under the Workmen's Compensation Insurance or Maritime Workmen's Insurance, as required by state and federal statute, the Developer shall maintain and shall cause each contractor or subcontractor to maintain Employer's Liability Insurance with a private insurance company for limits of at least as required by the Workers' Compensation Act of Washington and furnish satisfactory evidence of same.

## 3.5 NON-INTERFERENCE

The permittee shall be responsible for minimum interference with:

Traffic Routing
Fire Facility Clearance
Adjoining Property
Utility Facilities
Natural Surface Drainage

Prior to construction, these items are to be discussed with the City Public Works Department, and/or City Fire and Police Departments and/or the City Building Inspector, and special provisions may be included in any applicable City Permit(s).

## 3.6 WORK STANDARDS

All work performed pursuant to a permit issued shall be done in accordance with the Standard Specifications.

The following additional standards shall be applicable when pertinent, when specifically cited in the standards or when required by state or federal funding authority:

(a) Local Agency Guidelines, WSDOT, as amended.

(b) Guidelines for Urban Arterial Program, WSDOT, as amended.

(c) American Water Works Association Standards.

(d) Design criteria of federal agencies including the Federal Housing Administration, Department of Housing and Urban Development, the Federal Highway Administration, Department of Transportation and the Environmental Protection Agency.

(e) A Policy on Geometric Design of Highways and Streets, American Association of State Highway and Transportation Officials (AASHTO), 2011, or current edition when adopted by WSDOT.

(f) Standard Specifications for Highway Bridges, adopted by AASHTO, current edition.

(g) U.S. Department of Transportation Manual on Uniform Traffic Control Devices, “MUTCD,” as amended and approved by Washington State Department of Transportation, current edition.

(h) Guide for the Development of Bicycle Facilities, adopted by AASHTO, current edition.

(i) Associated Rockery Contractors (ARC), Standard Rock Wall Construction Guidelines.

(j) American Society for Testing and Materials (ASTM).

(k) Illuminating Engineering Society of America (IES) National Standard Practices for Roadway Lighting, RP-8, Current Edition, as modified herein.

(l) The WSDOT/APWA Standard Plans for Road and Bridge Construction, to be referred to as the "Standard Plans or Standard Details," current edition as amended.

(m) WSDOT Design Manual, current edition as amended.

(n) City and County Design Standards for the Construction of Urban and Rural Arterial and Collector Roads, adopted per RCW 35.78.030 and RCW 43.32.020; Snohomish County Engineering Design and Development Standards, January 2016.

(o) Institute of Transportation Engineers, Traffic Engineering Handbook, current edition.

(p) Water System Design Manual, Washington Department of Health (2009).

(q) Criteria for Sewage Works Design, Washington Department of Ecology (2008).

(r) NSF/ANSI 61.

# CHAPTER 4

# GENERAL REQUIREMENTS

This Chapter presents information that is generally applicable to all work within the existing right-of-way or new development.

## 4.1 SURVEY STAKING

All surveying and staking shall be performed by an engineering or surveying firm employed by the Developer and capable of performing such work. The engineer or surveyor directing and/or performing such work shall be currently licensed by the State of Washington to perform said tasks. The survey work shall be referenced to NAVD 88 vertical datum and NAD 83/91 horizontal datum.

A preconstruction meeting shall be held with the City prior to commencing staking. All construction staking shall be inspected by the City prior to construction.

The minimum staking of utility systems shall be as follows:

A. Stake centerline alignment every 25 feet with cuts and/or fills to bottom of trench.

B. Stake location of all catch basins/manholes and other fixtures for grade and alignment.

C. Stake location, size and depth of retention/detention facility.

D. Stake finished grade of catch basin/manhole rim elevation and invert elevations of all pipes in catch basins, manholes, and those that daylight.

E. Stake locations of all proposed fire hydrant, blow-off, air-vac, valves, meters, etc.

The minimum staking of streets shall be as follows:

F. Stake centerline alignment every 25 feet (50 feet in tangent sections) with cuts and/or fills to subgrade.

G. Stake top of ballast and top of crushed surfacing at centerline and edge of pavement every 25 feet.

H. Stake top back of curb at a consistent offset for vertical and horizontal alignment.

The minimum staking of water systems shall be as follows:

A. Provide staking sufficient to satisfy City Manager.

## 4.2 EASEMENTS

All public utilities not within the right-of-way shall be located within an easement dedicated to the City. Easements for utilities shall be a minimum of 15-feet wide. Utility easements shall be graded and surfaced sufficient for maintenance access vehicles. Easements for access, as well as utilities, shall be a minimum of 25-feet wide with a minimum of 20-foot paved surface.

## 4.3 UTILITY TRENCH EXCAVATION

A. Clearing and grubbing where required shall be performed within the easement or public right-of-way as permitted by the City and/or governing agencies. Debris resulting from the clearing and grubbing shall be disposed of by the owner or contractor in accordance with the terms of all applicable permits.

B. Trenches shall be excavated to the line and depth designated by the City to provide a minimum of 36 inches of cover over a water pipe and 48 inches over sanitary sewer pipe. Except for unusual circumstances where approved by the City, the trench sides shall be excavated vertically and the trench width shall be excavated only to such widths as are necessary for adequate working space and in compliance with all safety requirements of the prevailing agencies. The trench shall be kept free from water until joining is complete. Surface water shall be diverted so as not to enter the trench. The Contractor shall maintain sufficient pumping equipment on the job to ensure that these provisions are carried out.

C. The contractor shall perform all excavation of every description and whatever substance encountered and boulders, rocks, roots and other obstructions shall be entirely removed or cut out to the width of the trench and to a depth 6 inches below storm line grade. Where materials are removed from below the pipeline grade, the trench shall be backfilled to grade with material satisfactory to the City and thoroughly compacted.

D. Trenching and shoring operations shall not proceed more than 100 feet in advance of pipe laying without specific written approval of the City, and shall be in conformance with Washington Industrial Safety and Health

Administration (WISHA) and Office of Safety and Health Administration (OSHA) Safety Standard.

E. The bedding course shall be finished to grade with hand tools in such a manner that the pipe will have bearing along the entire length of the barrel. The bell holes shall be excavated with hand tools to sufficient size to facilitate the construction of pipe joints.

## 4.4 PIPE BEDDING

All utility pipes shall be bedded in conformance with the details in these Standards.

## 4.5 BACKFILLING

Backfilling and surface restoration shall closely follow installation of pipe so that not more than 100 feet is left exposed during construction hours without approval of the City. Selected material shall be placed and compacted around and under the utility pipe by hand tools. Special precautions should be provided to protect the pipe to a point 12 inches above the crown of the pipe. The remaining backfill shall be compacted to 95 percent of the maximum density in traveled areas, 90 percent outside driveway, roadways, road prism, shoulders, parking or other traveled areas. Where governmental agencies other than the City have jurisdiction over roadways, the backfill and compaction shall be done to the satisfaction of the agency having jurisdiction. Typically, trench sections crossing existing roadways, in roadway "prisms" or beneath traffic bearing areas shall be backfilled and compacted with crushed rock. Due to localized conditions, the City may allow/permit the backfill of the trench section with suitable excavated material, as determined by the City. The City may require CDF backfill for utility trenches crossing under roads based upon localized conditions and traffic loading. All excess material shall be loaded and hauled to waste.

## 4.6 INSPECTION

A. General

The City shall exercise full right of inspection of all excavating, construction, and other invasions of City right-of-way or public easements. The City Manager shall be notified two working days prior to commencing any work in the City's right-of-way or public easements. The City Manager is authorized to and may issue immediate Stop Work Orders in the event of noncompliance with this chapter and/or any of the terms and provisions of the permit or permits issued here under.

Timely notification by the developer as noted herein is essential for the City to verify through inspection that the work meets the standard. Failure to notify in time may oblige the City to arrange appropriate sampling and testing after-the-fact, with certification, by a professional engineer. Costs of such testing and certification shall be borne by the developer. At the time that such action is directed by the City Manager, the Manager may prohibit or limit further work on the development until all directed tests have been completed and corrections made to the satisfaction of the Engineer. The City reserves the right to reject infrastructure that in its opinion does not meet City standards.

B. Requirements for subdivision, binding site plan, commercial and right-of-way land use inspection.

Inspection of all development will be done by the City Manager. Unless otherwise instructed by the City Manager, construction events, which require monitoring or inspection, are identified as follows:

1. Preconstruction Conference. Three working days' prior notice. Conference must precede the beginning of construction and include owner, contractor, designing engineer, geotechnical engineer, utilities, and other parties affected. Plan approvals and permits must be in hand prior to the conference.

2. Clearing and Temporary Erosion/Sedimentation Control. One working day's notice prior to initial site work involving drainage and installation of temporary water retention/detention and siltation control or the protection of proposed low impact development facilities. Such work to be in accordance with the Stormwater Management Manual and the approved plans.

3. Utility Installation. One working day's notice prior to trenching and underground utility installation such as sanitary sewer, storm sewer, water, gas, power, telephone, and TV lines.

4. Utility Backfill and Compaction. One working day's notice before backfill and compaction of underground utility trenches.

5. Utility testing such as pressure tests. One days' notice before acceptance testing.

6. Subgrade Completion. One working day's notice at stage that underground utilities and roadway grading are complete, to include

placement of gravel base if required. Inspection to include compaction tests and certifications.

7. Curb and Sidewalk Forming. One working day's notice to verify proper forming and preparation prior to pouring concrete.

8. Curb and Sidewalk Placement. One working day's notice to check placement of concrete.

9. Crushed Surfacing Placement. One working day's notice to check placement and compaction of crushed surfacing base course and top course.

10. Paving. Three working days notice in advance of paving with asphalt or Portland cement concrete.

11. Structural. Three working days notice prior to each critical stage such as placing foundation piling or footings, placement and assembly of major components, and completion of structure and approaches. Tests and certification requirements will be as directed by the City Engineer.

C. Final Inspection

Prior to final approval of construction, a visual inspection of the job site will be made by the City. Restoration of the area shall be complete with all improvements being restored to their original or superior condition.

## 4.7 RECORD DRAWINGS

Permittees or their representatives who install systems within, on, or below the City's public rights-of-way or public easements shall furnish the City with accurate drawings, plans and profiles, showing the location and curvature of all underground structures installed, including existing facilities where encountered and abandoned installations. Horizontal locations of utilities are to be referenced to street centerlines, as marked by survey monuments, and shall be accurate to a tolerance of plus or minus 1/2 foot. The depth of such structure may be referenced to the elevation of the finished street above said utility, with depths to the nearest 1/10 foot being shown at a minimum 50-foot interval along the location of said utility.

Such record drawings shall be submitted to the City within 30 calendar days after completion of the work or prior to final project approval (e.g., final plat or

occupancy) whichever comes first. Record drawings shall be stamped, signed and dated by an engineer currently licensed in the State of Washington.

In the event that the permittee or his/her representatives does not have qualified personnel to furnish the record drawings required by this section, he shall advise the City Manager in order that necessary field measurement may be taken during construction for the preparation of record drawings. All costs of such field inspection and measurement, to include the preparation of the record drawings, shall be at the sole expense of the permittee.

Drawing Standards:

Minimum scale - 1"=50' horizontal; 1"=5' vertical
Detail scale - Larger as necessary
Topographic contours – 2 feet

Record drawings shall be submitted on full size plan sheets (22" x 34") with a signature and data, which verifies the “finished” condition of the project. Electronic files in the most recent version of AutoCAD, and in PDF format, shall be provided to the City.

The drawings shall be referenced to NAVD 1988 and NAD 83/91 and shall include at a minimum two existing City utility features such as sanitary or storm sewer, manholes, water valves or fire hydrants. Referencing to electrical features such as street lights, telephones or power poles is not acceptable.

## 4.8 DEVELOPER AGREEMENT REQUIREMENTS

All Contractors, land developers, or others, whether persons or entities, constructing curbs, gutters, storm-drainage systems, streets, water or sewer systems, or additions thereto, to be connected to the right-of-way, storm sewers, sanitary sewer lines and/or water lines of the City of Granite Falls, shall, as a prerequisite to securing approval for the construction of such system, execute a Developer Agreement in the form set forth in the attached documents.

## 4.9 ACCEPTANCE OF IMPROVEMENTS

The City shall not accept developer constructed improvements incrementally. All aspects of the grading, road, and utility improvements must be complete, clean, inspected, and as-built drawings submitted, prior to City acceptance of improvements and release of performance sureties. Prior to acceptance, all improvements shall be in good working order, clean, and free of defects including removal of debris, vegetation, and sediment from new utilities. All dedications,

easements, or other legal documentation shall be complete and recorded prior to final acceptance of the project improvements.

## 4.10 FINISHING AND CLEANUP

Before acceptance of utility system construction, all pipes, open ditches, manholes, catch basins, and other appurtenances shall be cleaned of all debris and foreign material. After all other work on this project is completed and before final acceptance, the entire roadway, including the roadbed, planting, sidewalk areas, shoulders, driveways, alley and side street approaches, slopes, ditches, utility trenches, and construction areas shall be neatly finished to the lines, grades and cross sections of a new roadway consistent with the original section, and as hereinafter specified.

Where all or portions of the utility is in undeveloped areas, the entire area which has been disturbed by the construction shall be shaped so that upon completion the area will present a uniform appearance, blending into the contour of the adjacent properties. All other requirements outlined previously shall be met.

Slopes, sidewalk areas, planting areas and roadway shall be smoothed and finished to the required cross section and grade by means of a grading machine insofar as it is possible to do so without damaging existing improvements, trees, shrubs or low impact development (LID) facility locations. Machine dressing shall be supplemented by hand work to meet requirements outlined herein, to the satisfaction of the City Inspector and/or the City Engineer.

Upon completion of the cleaning and dressing, the project shall appear uniform in all respects. All graded areas shall be true to line and grade. Where the existing surface is below sidewalk and curb, the area shall be filled and dressed out to the walk. Wherever fill material is required in the planting area, the finished grade shall be elevated to allow for final settlement, but nevertheless, the raised surface shall present a uniform appearance.

All rocks in excess of 1-inch diameter shall be removed from the entire construction area and shall be disposed of the same as required for other waste material. In no instance shall the rock be thrown onto private property. Overhang on slopes shall be removed and slopes dressed neatly so as to present a uniform, natural, well-sloped surface.

All excavated material at the outer lateral limits of the project shall be removed entirely. Trash of all kinds resulting from clearing and grubbing or grading operations shall be removed and not placed in areas adjacent to the project. Where machine operations have broken down brush and trees beyond the lateral limits of

the project, the Developer and/or Contractor shall remove and dispose of same and restore said disturbed areas at his own expense.

All pavements and oil mat surfaces, whether new or old, shall be thoroughly cleaned. Existing improvements such as Portland cement concrete curbs, curb and gutters, walls, sidewalks, and other facilities, shall be cleaned to the satisfaction of the City Manager.

Castings for manholes, valves, lamp holes, vaults and other similar installations, which have been covered with the asphalt material, shall be cleaned to the satisfaction of the City.

## 4.11 FINAL ACCEPTANCE

Prior to final inspection, all pipelines shall be flushed and cleaned and all debris removed. A pipeline "cleaning ball" of the proper diameter for each size of pipe shall be flushed through all storm and sanitary sewer pipelines prior to final inspection. Sanitary and storm sewer lines shall be "videotaped" in their entirety using a remote controlled camera. All water mains shall have passed pressure and bacteriological testing.

The General Notes numbered 1 through 6, as shown and further referenced herein, shall be included or referenced on any plans submitted to the City for construction approval dealing with street design.

# CHAPTER 5

# STREET AND ASPHALT CONCRETE PATHS AND/OR BIKEWAYS STANDARDS

## 5.1 GENERAL CONSIDERATIONS

### A. General

The overall goal of this chapter is to encourage the uniform development of an integrated, fully accessible public transportation system that will facilitate present and future travel demand with minimal environmental impact to the community as a whole.

Development of properties on or tributary to substandard or unsafe (safety issues) roadways may, depending on the size and type of development, be cause for "off-site" improvements to the substandard or unsafe corridors, to include road drainage facilities. The City Engineer shall determine when and if such conditions exist. At a minimum a 20-foot-wide paved surface with curb, gutter and sidewalk on one side, and associated storm drainage, will be required for off-site improvements as a condition of development.

When new development borders two or more roads with different classifications the development shall take access off the road with the lower classification. In the event that abutting roads have the same classification the access shall be determined based upon existing and projected future traffic so as to minimize impacts on traffic flow. Access onto high volume roads may be denied in the interest of traffic safety or operational requirements.

This chapter provides minimum street design standards as well as minimum design standards for "stand alone" pedestrian and/or bike trails/paths. Higher design and construction standards may be warranted due to localized design and construction parameters.

## 5.2 STREETS

### A. General

All street design and construction must provide for the maximum traffic loading and capacity conditions anticipated based upon existing land use and zoning. The width and grade of the pavement must conform to specific standards set forth herein for safety and uniformity.

B. Design Standards

The design of streets and roads shall depend upon their type and usage. The design elements of streets shall conform to City standards as set forth herein.

The layout of streets shall provide for the continuation of existing arterial streets in adjoining subdivisions or of their proper projection when adjoining property is not subdivided. Local access streets, which serve primarily to provide access to abutting property, shall be designed to discourage through traffic through the use of traffic calming devices or other City-approved measures. See Table 5-1 Minimum Street Design Standards in Section 5.3.

1. Grade. Street profile grade should conform closely to the natural contour of the land. In some cases, a different grade may be required by the City Engineer. Unless otherwise approved by the City, the minimum profile grade shall be 0.7 percent. Local conditions may, in the opinion of the City's Engineer, require a lesser profile grade in which case (if specifically approved by the City Engineer), the minimum allowable profile grade shall be 0.5 percent. The maximum allowable grade shall be as further specified in the Table 5-1 Minimum Street Design Standards.

2. Width. The pavement and right-of-way width depend upon the street classification. Table 5-1 Minimum Street Design Standards show the minimum widths allowed.

   Street widths shall be measured from face of vertical curb to face of vertical curb on streets with cement concrete curb and gutter, and from centerline of asphalt to centerline of asphalt for streets approved by the City without concrete vertical curb and gutter.

3. The developer is required to retain a licensed geotechnical engineer to make soils tests and to provide engineering recommendations for design of the sub-base and roadway sections based on "in place" soils, depth of "free draining" structural materials, projected pavement loadings, roadway classification, average daily traffic volume, etc.

4. In special circumstances, as may be specifically approved/required by the City Planning Commission and/or City Council, due to local conditions and/or geometric restrictions, paving widths or

improvement standards may be required which are different than those specifically listed herein.

5. Streets and lots shall be placed in relationship to natural topography so that grading and filling and/or other alternations of existing condition is minimized. Reserve strips or street plugs controlling access to streets will not be approved unless, in the judgment of the City Engineer, such is necessary for the protection of the public welfare or substantial property rights. The control and disposal of the land comprising such strips or plugs shall be placed within the jurisdiction of the City.

6. The City intends to promote connectivity of roadways within and between plats. Therefore, if, in the opinion of the City, it is necessary to give access to, or permit future subdivision of adjoining land, streets shall be extended to the boundary of the subdivision and the resulting dead-end street shall be provided with a temporary cul-de-sac. The temporary cul-de-sac shall be appropriately signed as "temporary" and further paved, to include furnishing and installing concrete curbs, gutters and sidewalks and constructed to City standards.

7. Alleys shall be prohibited except when approved by the City and Fire Marshall's office.

8. The street system (in residential subdivisions and short subdivisions) shall be laid out with a minimum number of intersections with other arterial streets. No streets shall intersect at intervals closer than 125 feet, unless, in the judgment of the City Engineer, an exception to this rule would be in the public interest and welfare.

9. Streets designed to have one end permanently closed shall be no longer than 400 feet

10. Intersecting streets shall be laid out so that blocks between street lines are not more than 1,320 feet in length.

11. Streets shall be laid out so as to intersect as nearly as possible at right angles, and in any event, no street shall intersect with any other street at an angle of less than 60 degrees, without specific written City approval.

12. At a minimum streets shall conform to all requirements of the latest edition of the Uniform Fire Code adopted by the City.

13. All street construction plans shall be submitted to the City and shall include the required information from the plan development checklist.

    All public streets, sidewalks and alleys shall be designed to meet the needs of anticipated future development;

    All topsoil, organic, and structurally unsuitable soils shall be removed as necessary for the proposed street section.

14. In addition to the above requirements, street design shall incorporate the following minimum requirements:

    a. All new utility systems such as power, gas, cable TV and telephone shall be buried, except where topography or site conditions prohibit reasonable installation. Design and installation of the system shall be done by the franchised utility company. Design shall be submitted to the City Engineer for review and approval prior to installation;

    b. Street lighting shall be provided in accordance with Snohomish County PUD standards. Additional City street lighting is required as specified in Section 5.20.

## 5.3 DESIGN STANDARDS

City streets are divided into four categories (Table 5-1). Major arterial, minor arterial, collector arterial, local access streets, in accordance with regional transportation needs and the functional use each serves alleys may be allowed in special circumstances as approved by the City. Function is the controlling element for classification and shall govern right-of-way, road width, and road geometrics. The proponent/developer shall request information on the functional classification of existing streets from the City, Manager. New streets will be classified by the City.

Generally speaking, the functional classification of streets is defined as follows:

- Major arterials are defined as streets connecting two or more arterials together or serving industrial areas.

- Minor arterials are defined as streets serving or anticipated to serve in the future less than 14,000 average daily trips and provide service for trips of moderate length, serve geographic areas that are smaller than their higher arterial counterparts and offer connectivity to the higher arterial system.

- Collector arterial streets are defined as streets currently serving or anticipated to serve up to 2,600 average daily trips and serve a critical role in the roadway network by gathering traffic from local roads and funneling them to the arterial network.

- Local access streets are streets that do not fit the definitions above and are not intended for use in long distance travel. Local roads are to be designed to discourage through traffic.

- Alley is defined as a strip of land dedicated for public use which is 20 feet in width and which is intended to provide driveway access to adjacent properties. Alleys are not allowed except under special circumstances, and are intended only to serve the properties directly abutting them for non-commercial purposes only.

**TABLE 5-1**

**Minimum Street Design Standards**

| Design Standard | Major Arterial | Minor Arterial | Collector Arterial | Local Access Street | Alley |
|---|---|---|---|---|---|
| Min. Right-of-Way(1) | 100 feet | 75 feet | 60 feet | 50 feet | 25 feet |
| Utility Easement(2) | None | None | 10 ft. min., can be split between both sides | 10 ft. min., can be split between both sides | None |
| Min. Pavement Width(3) | 64 feet | 40 feet | 40 feet | 36 feet | 20 feet |
| Parking Lane | None | Both Sides | Both Sides | Both Sides | None |
| Min./Max. Grade | 0.7% - 8.0% | 0.7% - 8.0% | 0.7% - 15% | 0.7% - 15% | 0.7% - 15% |
| Curb | Vertical Cement Concrete Curb and Gutter both sides | Vertical Cement Concrete Curb and Gutter both sides | Vertical Cement Concrete Curb and Gutter both sides | Vertical Cement Concrete Curb and Gutter both sides | One side if Cross Slope alley. None if "V" section. |
| Planter Strip(3) | 10 feet in median plus 5 feet min. both sides | 10 feet in median plus 5 feet min. both sides | 5 feet minimum both sides | None | None |
| Sidewalk(3)(4) | 5 feet min. both sides in back of planter strip | 5 feet min. both sides in back of planter strip | 5 feet min. both sides in back of planter strip | 7 feet min. both sides | None |
| Cul-de-Sac Radius(4) | N/A | N/A | N/A | 50 foot paved bulb radius | N/S |

## TABLE 5-1 – (continued)

## Minimum Street Design Standards

| Design Standard | Major Arterial | Minor Arterial | Collector Arterial | Local Access Street | Alley |
|---|---|---|---|---|---|
| Intersection Curb Radius | 30 feet | 30 feet | 30 feet | 25 feet | 15 feet |
| Design Speed | Per City Direction | 30 mph | 25 mph | 25 mph | 15 mph |
| Stopping Site Distance | Per City Direction | 250 feet | 200 feet | 200 feet | Per City Direction |
| Access | Controlled. No Direct Lot Access | Residential and Commercial | Residential and Commercial | Residential and Commercial | Residential |

(1) Right-of-way requirements may be increased if additional lanes, pockets, transit lanes, bus loading zones, operational speed, bike lanes, utilities, schools or other factors are proposed and/or required by the City.

(2) Utility Easement not associated with a City right-of-way shall be a minimum width of 15 feet.

(3) Alternate roadway, sidewalk and planter strip design may be considered and/or required by the City.

(4) Minimum sidewalk width in the Central Business District and the General Commercial Zones shall be 6 feet. Sidewalk width measured from back of curb when curb and sidewalk are contiguous.

(5) Pavement cul-de-sac bulbs shall have a right-of-way extending 6 feet outside the face of curb.

## TABLE 5-2

## Design Values for Roads

| Design Speed | 20 | 25 | 30 | 35 | 40 |
|---|---|---|---|---|---|
| Horizontal Curvature for Normal Crown Section, Radius (ft) | 100 | 180 | 300 | 460 | 600 |
| Horizontal Curvature for 2% Superelevation, Radius (ft) | N/A | 155 | 250 | 375 | 540 |
| Horizontal Curvature for 4% Superelevation, Radius (ft) | N/A | 145 | 230 | 345 | 490 |
| Horizontal Curvature for 6% Superelevation, Radius (ft) | N/A | N/A | 215 | 320 | 450 |
| Stopping Site Distance* | 125 | 150 | 200 | 250 | 325 |
| Entering Site Distance ** | 250 | 300 | 350 | 400 | 450 |
| Passing Site Distance for a 2-Lane Road | | 1,100 | 1,300 | 1,500 | 1,650 |

*If entering on a downgrade slope the stopping sight distances shall be increased for slopes greater than 3 percent.

** Distance required on major street and uncontrolled intersection

**TABLE 5-3**

**Road Classification for the City of Granite Falls**

| Road Type | Road in Classification |
|---|---|
| Major Arterial | Quarry Road, Stanley Street (Quarry Road to Granite Avenue) |
| Minor Arterial | Stanley Street (Granite Avenue to Alder Avenue), 100th Street, Jordan Road, Galena Street, Alder Avenue, Mt. Loop Highway, South Granite Avenue (north of Pioneer Street) |
| Collector Arterial | South Granite Avenue (south of Pioneer Street)/Robe Menzel Lake Road, Hemming Way, Alpine Street, Pioneer Street/Menzel Lake Road |
| Local | All roads not included above |

## 5.4 STREET NAMES

The developer shall submit proposed street names at the time the preliminary plat is submitted for review by the City Manager. The City Manager will insure that the name assigned to a new street is consistent with policies of the City. The City Council shall approve all street names based on a recommendation by the City Manager.

An address number will be assigned to all new buildings no later than at the time the building permit is issued. It is then the owner's responsibility to see that the house numbers are placed clearly and visibly at the main entrance to the property or at the principal place of ingress.

## 5.5 SIGNING

The developer is responsible for furnishing and providing all temporary and permanent traffic control signs and street designation signs. Traffic control signing shall comply with the provisions as established by the U.S. Department of Transportation Manual on Uniform Traffic Control devices (MUTCD). All signs, including poles and hardware, shall be furnished and installed by the developer. Street designation signs shall display street names or grid numbers as applicable.

## 5.6 STREET FRONTAGE IMPROVEMENTS

A. All industrial, commercial, or residential development, except as excluded from these Standards in Chapter 1, shall install street frontage improvements at the time of construction. Such improvements shall generally include concrete curb and gutter, concrete sidewalk, street storm drainage, street lighting system, utility installation and/or relocation, landscaping and irrigation, undergrounding aerial utilities and street pavement widening all per these Standards. Plans shall be prepared and

signed by a registered engineer currently licensed in the State of Washington.

B. All frontage improvements shall be made across the full frontage of the property. Corner lots shall provide for full frontage along both rights-of-way. Through lots shall provide for frontage on both ends of the property.

C. All frontage improvements shall provide for a smooth transition to neighboring property.

D. Storm drainage shall be installed as necessary to extend past the neighboring properties to prevent stormwater runoff from impacting those properties.

## 5.7 OFFSITE IMPROVEMENTS

Where a project is connected to an improved street by an unimproved right-of-way or gravel road within the right-of-way, offsite improvements shall be required. The offsite improvements shall be a 20-foot-wide paved road with curb, gutter, and sidewalk on one side and associated storm drainage.

## 5.8 DEAD ENDS

Where a street is dead ended, turn around provisions must be provided where the road serves more than 150 feet in length. The Detail section of these Standards, and Table 5-1, show the requirements for a cul-de-sac. The turnaround may be a hammerhead as shown in the Miscellaneous Detail Section of these Standards if approved by the City.

## 5.9 INTERSECTIONS

A. Traffic control will be as specified in the Manual on Uniform Traffic Control Devices (MUTCD) or as may be specifically modified by the City Manager as a result of appropriate traffic engineering studies.

B. For safe design, the following types of intersection features should be avoided:

1. Intersections with more than four intersecting streets;

2. “Y” type intersections where streets meet at acute angles;

C. Spacing between adjacent intersecting streets, whether crossing or "T" should be as follows:

| When highest classification involved is: | Minimum centerline offset should be: |
|---|---|
| Major Arterial | 350 feet |
| Minor Arterial | 300 feet |
| Collector Street | 300 feet |
| Local Access Street | 150 feet |

When different class streets intersect, the higher standard shall apply on curb radii. Deviations to this may be allowed at the direction of the City Engineer.

D. On sloping approaches at an intersection, landings shall be provided with grade not to exceed one foot difference in elevation for a distance of 30 feet approaching any arterial or collector or 20 feet approaching a local access street, measured from nearest right-of-way line (extended) of intersecting street.

E. All intersections shall meet the sight distances as given in Tables 5-1 and 5-2.

## 5.10 HALF STREETS

Half-street improvements are not permitted.

## 5.11 DRIVEWAYS

A. General

1. Driveway approach details are located at the end of these Standards.

2. All driveway approaches (from roadway edge to right-of-way) shall be constructed of Portland Concrete Cement, and shall be at least 6-inches thick, over a 4-inch crushed surfacing top course. Driveway approaches shall be subject to the same testing and inspection requirements as curb, gutter, and sidewalk construction. Driveway approaches shall be Class 4,000 psi.

3. All driveways (on private property) shall be constructed of Portland cement concrete, and shall be at least 6-inches thick, over a 4-inch

crushed surfacing top course, with the exception that driveways longer than 100 feet may be asphalt with written permission from the City.

4. Joint-use driveways serving up to four adjacent parcels are encouraged. Where shared use extends onto private property, an access easement shall be recorded for all parcels of land impacted. Joint use driveways shall have a minimum paved width of 20 feet. Joint driveways longer than 150 feet must have a turnaround as discussed under dead end streets, and as shown in the Standard Details

5. No commercial or industrial type driveway shall be constructed where backing onto the sidewalk or street is required.

6. No driveway shall extend into the street further than the face of the curb or edge of asphalt in the absence of a curb.

7. The angle between any driveway and the street shall be not less than 45°.

8. Generally, the two edges of each driveway shall be parallel.

9. Every driveway must provide access to a garage, carport, parking area or other structure on private or public property requiring the entrance of vehicles. No public curb shall be cut unless a driveway is installed.

10. Maintenance of driveway approaches shall be the responsibility of the owners whose property they serve.

11. No person shall begin work on the construction, alteration, repair or removal of any driveway or the paving of any parking strip on and/or adjacent to any street, alley or other public place in the City without first obtaining a right-of-way permit from the City. Exceptions to permit acquisition requirements may be granted at the discretion of the Manager and/or Building Official.

12. Driveway Location:

    No driveway shall be located as to create a hazard to pedestrians, bicyclists or motorists or to invite or compel illegal or unsafe traffic movements.

13. No driveway shall be constructed in such a manner as to be a hazard to any existing street lighting standard, utility pole, traffic regulating device or fire hydrant. At a minimum, all portions of the driveway shall be located 5 feet from these and similar appurtenances and adjacent property lines for residential properties. Driveways shall be located a minimum of 9 feet from the property line for commercial and industrial areas. The cost of relocating any such street structure when necessary to do so shall be paid by the abutting property owner. The relocation of any street structure shall be allowed with the specific written approval of the Owner of the structure involved.

14. Driveway Size and Number

    a. Except as otherwise provided, the width of any residential driveway shall not exceed 22 feet and not be less than 10 feet (exclusive of the radii of the returns, see Table 5-4). The City Engineer may authorize additional residential driveway widths for three-car garages or for access driveways necessary for off-street parking or for recreational vehicles.

**TABLE 5-4**

**Maximum Residential Driveway Width**

| Property Frontage | Maximum Driveway Width |
|---|---|
| Less than 50' | 16' |
| ≥ 50' and less than 75' | 20' |
| Greater than 75' | 25' |

    b. The total width of all driveways for any one ownership on a street shall not exceed 30 percent of that ownership along the street. Any driveway which has become abandoned or unused through a change of the conditions for which it was originally intended or which for any other reason has become unnecessary, shall be closed and the owner shall replace any such driveway curb-cut with a standard curb according to the City's standards.

    c. The length of any driveway shall not exceed 150 feet, without approval of the City Engineer.

d. There shall not be more than two driveways on one street for any one ownership except where a single ownership is developed into more than one unit of operation, each unit sufficient in itself to meet the requirements of off-street parking and loading as required by the zoning ordinance and where the necessity for separate access to the street is evident. In such cases, there shall not be more than two driveways on the street for any one unit of operation.

15. Driveway Slopes and Entry

Driveway slopes or grades shall not exceed eight percent unless otherwise authorized/approved by the City Engineer in writing. The City Engineer will consider authorizing driveway slopes exceeding eight percent, up to a maximum of twelve percent, if it is determined that:

a. The driveway is the only economically and environmentally reasonable alternative.

b. The driveway will not present a traffic, pedestrian, bicycle or safety hazard.

c. The public health, safety and general welfare will not be adversely affected.

d. Driveway access onto an arterial street shall be 150 feet, or as far as practicable, from an intersecting street except with written permission from the City. No driveway shall be located within 20 feet of a crosswalk.

e. Within the limitations set forth above, access to arterial streets within the City shall be limited to one driveway for each tract of property separately owned, except that automobile service stations may be allowed two driveways as further stated herein.

f. Driveways giving direct access onto arterials may be denied if alternate access is available. Deviations of these standards may be permitted by the City Engineer.

16. Driveways may utilize the full width of narrow “pipe stem” parcels or easements if approved by the City Engineer.

17. Commercial and Industrial Driveways

For commercial or industrial driveways with heavy traffic volumes or significant numbers of trucks, the Director may require construction of the access as a street intersection. This requirement will be based on traffic engineering analysis submitted by the applicant that considers, among other factors, intersection spacing, sight distance and traffic volumes. No commercial or industrial type driveway shall be constructed, if reasonably possible, where backing onto the sidewalk or street is required. Street approaches and/or ingress and egress tapers may be required in industrial and commercially zoned areas as directed by the City Engineer.

## 5.12 SIGHT OBSTRUCTION

The following sight clearance requirements take into account the proportional relationship between speed and stopping distance.

The sight distance area is a clear-view triangle formed on all intersections by extending two lines of specified length (A) and (B) as detailed within these Standards. The area within the triangle shall be subject to restrictions to maintain a clear view on the intersection approaches.

A. Sight Distance Triangle

1. Stop or Yield Controlled Intersection

See Table 5-2.

2. Uncontrolled Intersection

a. Length as shown below is for each road with the speed limit on each road governing the sight distance as measured from the center of the intersecting streets along the centerlines of both streets and connecting these endpoints to form the hypotenuse of the triangle.

| Speed Limit | Sight Distance (feet) |
|---|---|
| 15 mph | 80 |
| 20 mph | 100 |
| 25 mph | 125 |
| 30 mph | 150 |
| 35 mph | 175 |
| 40 mph | 205 |

The vertical clearance area within the sight distance triangle shall be free from obstructions to a motor vehicle operator's view between a height of 3 feet and 10 feet above the existing surface of the street.

Sight obstructions that may be excluded from these requirements include: fences in conformance with this chapter, utility poles, regulatory signs, trees trimmed from the base to a height of 8 feet above the sidewalk and 14 feet above the street, places where the contour of the ground is such that there can be no cross visibility at the intersection, saplings or plant species of open growth habits and not in the form of a hedge which are so planted and trimmed as to leave at all seasons a clear and unobstructed cross view, buildings constructed in conformance with the provisions of appropriate zoning regulations and preexisting buildings.

## 5.13 SUBGRADE PREPARATION

The subgrade area of the street right-of-way shall be cleared of brush, weeds, vegetation, grass and debris, per Section 2-01 of the Standard Specifications. All cleared and grubbed material shall be satisfactorily disposed of. All depressions, or ruts, which contain water will be drained.

The subgrade shall then be bladed and dragged to remove inequalities and secure a uniform surface. The existing subgrade will be compacted to a minimum density as defined in the Standard Specifications and as witnessed by the City Inspector. Compaction tests may be required to be conducted at the discretion of the City to verify same.

## 5.14 CRUSHED SURFACING (BASE AND TOP COURSE)

Two or more courses of Crushed Surfacing Base Course or Top Course shall be placed upon an existing roadway surface, or upon a subgrade properly prepared as outlined above. Crushed surfacing material shall be uniform in quality and substantially free from wood, roots, bark and other extraneous material. It will compact into a dense and unyielding mass, which will be true to line, grade and cross-section.

Base courses and top courses shall be placed in accordance with the approved cross-section. Compaction shall be a minimum of 95 percent of standard density as determined by the compaction control test for granular materials. Base course rock may be composed of larger fractured rock if recommended by the developer's engineer and approved by the City Engineer.

## 5.15 SURFACING REQUIREMENTS

All streets in the City of Granite Falls will be paved with either Asphalt Concrete or Cement Concrete, in strict compliance with these standards. Low Impact Development alternative surfaces are encouraged and may be approved by the City on a case by case basis.

The pavement design shall meet the requirements in the latest publication of the AASHTO Guide for Design of Pavement Structures. The pavement section shall be designed and stamped by an engineer currently licensed in the State of Washington. Pavement shall be designed using currently accepted methodology that considers the load bearing capacity of the soils and the traffic carrying capacity requirements of the roadway. Plans shall be accompanied by a pavement thickness design based on soil strength parameters reflecting actual field tests and traffic loading analyses. The analysis shall include the traffic volume and axle loading, the type and thickness of roadway materials and the recommended method of placement.

One soil sample per each 500 LF of centerline with three minimum per project representative of the roadway subgrade shall be taken by the Developer and delivered to a City approved soils lab in order to determine a statistical representation of the existing soil conditions.

Soil tests shall be performed by an engineering firm specializing in soils analysis and currently licensed in the State of Washington.

The soils report, signed and stamped by a soils engineer licensed by the State of Washington, shall be based on actual soils tests and submitted with the plans. All depths indicated are a minimum compacted depth.

Construction of materials to create streets paved with Hot Mix Asphalt Concrete (including subbase) shall conform to Sections 5-04 and 9-03 of the Standard Specifications. Pavement material for asphalt concrete roads will be hot mix asphalt concrete and be constructed at least 3 inches thick (minimum compacted thickness) over the prepared subbase. Additional thickness may be required depending upon specific site conditions and anticipated traffic loading. Generally, the accepted asphalt hot mix is Hot Mix Asphalt Class 1/2" PG 64-22. Mechanical spreading and finishing will be as described in Section 5-04.3(9) of the Standard

Specifications. Compaction will be performed by the equipment and methods presented in Section 5-04.3(10) of the Standard Specifications, and Surface Smoothness shall satisfy the requirement of Section 5-04.3(13) of the Standard Specifications.

Cement concrete streets will be constructed as specified in Section 5-05 of the Standard Specifications. Cement concrete shall be placed over a minimum of 6 inches of compacted crushed surfacing.

Permanent pavement patching will be performed as described in the pavement repair detail listed herein, and in compliance with Section 5-04 of the Standard Specifications.

## 5.16 TEMPORARY STREET PATCHING

Temporary restoration of trenches shall be accomplished by using 2-inch Hot Mix Asphalt Concrete Pavement when available or 4-inch medium-curing (MC-250) liquid asphalt (cold mix), 3-Inch Asphalt Treated Base (ATB), or steel plates suitable for H-20 traffic loading conditions. Steel plates shall be provided with a cold mix “lip” to accommodate a smooth transition from pavement to steel plate.

All temporary patches shall be maintained by the contractor until such time as the permanent pavement patch is in place. All temporary patch materials shall be loaded and hauled to waste by the Developer, in compliance with applicable governmental regulations.

If the contractor is unable to maintain a patch for whatever reason, the City will patch it at actual cost plus overhead and materials. The property owner/developer/permittee shall be invoiced for any City expenses incurred to comply with this Contractor requirement.

## 5.17 TRENCH BACKFILL AND RESTORATION

Trench restoration shall be either by a patch or a patch plus overlay as required by the City. Generally utility trenches parallel to the roadway will require a full width overlay.

A. All trench and pavement cuts shall be made by sawcuts. The cuts shall be a minimum of 1 foot outside the trench width or 1 foot outside any pavement that cracks as a result of the trenching activities.

B. All trenches shall be backfilled with crushed surfacing materials, approved excavated material, control density fill or hot mix asphalt. The trench shall be compacted to 95 percent maximum density, as described in Section 2-03

of the Standard Specifications. The City will be the sole judge of approving materials to be utilized for backfill.

For street crossings, the fill shall be 100 percent imported crushed rock, either crushed surfacing base course or crushed surfacing top course or CDF if required by the City. All trench backfill materials shall be compacted to 95 percent density. If CDF is required it will be placed from 6 inches above the utility to 4 inches below the bottom of the asphalt. Compacted crushed rock (5/8 minus) will be placed in the top 4 inches between the CDF and asphalt.

Backfill compaction shall be performed in 6 inch lifts, unless otherwise approved by the City.

Replacement of the asphalt concrete or Portland concrete cement shall match existing asphalt concrete or Portland concrete cement thickness, plus 1 inch.

C. Utility trenches separated by 60 feet or less shall be repaired by asphalt planing between trenches to a minimum depth of 2 inches, and a hot mix asphalt overlay from the outer edge of the trenches to the curb, to create one single road patch.

D. Tack coat shall be applied to the existing pavement and edge of cut and shall be emulsified asphalt grade CSS-1. All joints shall be sealed with a sealant meeting Section 9-04.2 of the Standard Specifications. Tack coat shall be applied as specified in Section 5-04 of the Standard Specifications.

E. Hot mix asphalt concrete shall be placed on the prepared surface by an approved paving machine and shall be in accordance with the applicable requirements of Section 5-04 of the Standard Specifications, except that longitudinal joints between successive layers of asphalt concrete shall be displaced laterally a minimum of 12 inches unless otherwise approved by the City. Fine and coarse aggregate for asphalt shall be in accordance with Section 9-03.8 of the Standard Specifications. Asphalt concrete over 2-inches thick shall be placed and compacted in equal lifts not to exceed 2 inches each.

All street surfaces, walks or driveways within the street trenching areas affected by the trenching shall be sawcut, or ground and paved to an extent that provides a smooth-riding connection and expeditious drainage flow for the newly paved surface. Feathering the asphalt shall not be allowed.

Surface smoothness shall be per Section 5-04.3(13) of the Standard

Specifications. The paving shall be corrected by removal and repaving of the trench only.

F. All joints shall be sealed with a sealant meeting Section 9-04.2 of the Standard Specifications.

G. When trenching within the roadway shoulder(s), the shoulder shall be restored to its original or better condition.

H. The final patch shall be completed as soon as possible and shall be completed within 30 days after first opening the trench. This time frame may be adjusted if delays are caused by inclement paving weather, or other adverse conditions that may exist. However, delaying of final repair is allowable only subject to the City Engineer's approval. The City Engineer may deem it necessary to complete the work within the 30 days time frame and not allow any time extension. If this occurs, the Contractor shall perform the necessary work as required by the City.

## 5.18 MATERIAL AND CONSTRUCTION TESTING

Testing shall be required at the developer's or contractor's expense. The testing shall be ordered by the developer or contractor and the chosen testing lab shall be accredited for performing the various testing methods either by AASHTO R18, AASHTO 150/IEC 17025, or the American Association for Laboratory Accreditation and further approved by the City. Testing shall be done on all materials and construction as specified in the Standard Specifications and with frequency as specified herein.

**TABLE 5-5**

**Testing and Sampling Frequency Guide**

**Earthwork**

| Item | Location | Test | Testing Frequency |
|---|---|---|---|
| Undisturbed Native Soil | Structures | In Place Density(3) | Two random tests in building footings and two tests on subgrade within building line. |
| | | Moisture Density Relationship (Modified Proctor) | One test and any time material type changes. |

| Item | Location | Test | Testing Frequency |
|---|---|---|---|
| Fills and Backfills | Structures (adjacent to) | In Place Density(3) | One test per structure Backfills per 2,000 sq. ft. taken 12 inches below finished Grade. |
| | | Moisture Density Relationship (Modified Proctor) | One test and any time material type changes. |
| Subgrades | Site | In Place Density(3) | One test per lift per 2,500 sq. ft. |
| | | Moisture Density Relationship (Modified Proctor) | One test and any time material type changes. |
| Embankments or Borrow | Any | In Place Density(3) | One test per lift per 500 cubic yards placed. |

**Trenching**

| Item | Test | Testing Frequency |
|---|---|---|
| Pipe Bedding | Gradation(1) | One for each material source. |
| Trench Backfill | Gradation(1) | One for each material source. |
| | In-Place Density(1)(2)(3)(4) | One every 100 feet of trench and every 2 feet in depth of backfill material. |
| | Moisture Density Relationship (Modified Proctor)(3) | One prior to start of backfilling operations, one every 20 densities and any time material type changes. |

**Aggregate Materials**

| Item | Test | Testing Frequency |
|---|---|---|
| Crushed Surfacing Base Course | Gradation, SE and Fracture | 1 – 2,000 TN. |
| | Density(1) | One test on every lift on material placed at a frequency of 250 square yards of completed area. |
| Crushed Surfacing Top Course | Gradation, SE and Fracture | 1 – 2,000 TN. |
| | Density(1) | One test on every lift on material placed at a frequency of 250 square yards of completed area. |

## Hot Mix Asphalt and Asphalt Treated Base

| Item | Test | Testing Frequency |
|---|---|---|
| Commercial HMA and ATB | Rice Density | 1 – project. |
| HMA Cl. ___ PG ___ Project Quantity ≤ 400 tons | Rice Density | 1 – project. |
| HMA Cl. ___ PG ___ Project Quantity > 400 tons ≤ 800 tons | Rice Density, Gradation and Asphalt Content | 1 – project. |
| HMA Cl. ___ PG ___ Project Quantity > 800 tons | Rice Density, Gradation and Asphalt Content | 1 – 800 TN.(5) |
| Commercial HMA, HMA Cl. ___ PG ____, ATB | Compaction(1) | 1 – 80 TN. |

## Hot Mix Asphalt Aggregate(9)

| Item | Test | Testing Frequency |
|---|---|---|
| Aggregate | SE, Fracture | 1 – 1,600 TN. |
| Blend Sand | SE | 1 – Project. |
| Mineral Filler | Sp. G and Pl | Certificate. |

## Asphalt Reinforcement Mesh

| Item | Test | Testing Frequency |
|---|---|---|
| Asphalt Reinforcement Mesh | Adhesion Test | 1 – 3,000 SF. |

## PCC Paving(8)

| Item | Test | Testing Frequency |
|---|---|---|
| Course Aggregate(7) | Gradation | 1 – 1,000 CY. |
| Fine Aggregate(7) | Gradation | 1 – 1,000 CY. |
| Combined Aggregate(7) | Gradation | 1 – 1,000 CY. |
| Air Content | Air | 1 – 500 CY. |
| Cylinders (28 Day) | Compressive Strength | 1 – 500 CY. |
| Core | Density<br>Thickness | 1 – 500 CY.<br>1 – 500 CY. |
| Cement(6) | Chemical and Physical Certification | |

## PCC Structures(8)

| Item | Test | Testing Frequency |
|---|---|---|
| Course Aggregate(7) | Gradation | 1 – 1,000 CY. |
| Fine Aggregate(7) | Gradation | 1 – 1,000 CY. |
| Combined Aggregate(7) | Gradation | 1 – 1,000 CY. |
| Consistency | Slump | 1 – 50 CY. |

| Item | Test | Testing Frequency |
|---|---|---|
| Air Content | Air | 1 – 50 CY. |
| Cylinders (28 Day) | Compressive Strength | 1 – 50 CY. |
| Cement(6) | Chemical and Physical Certification | |
| Grout | Compressive Strength | 1 set/day. |

(1) All acceptance tests shall be conducted from in-place samples.
(2) Additional tests shall be conducted when variations occur due to the Contractor's operations, weather conditions, site conditions, etc.
(3) All compaction shall be in accordance with the Compaction Control Test of Section 2-03.3(14)D. The nuclear densometer, if properly calibrated, may be used for the required testing frequency and procedures. The densometer shall be calibrated and is recommended for use when the time for complete results becomes critical.
(4) Depending on soil conditions, it is anticipated that compaction tests will be required at depths of two feet above the pipe and at each additional two feet to the existing surface plus a test at the surface.
(5) A minimum of three samples, on a random basis, shall be taken and tested.
(6) Cement may be accepted by the Engineer based on the Manufacturer's Mill Test Report number indicating full conformance to the Specification.
(7) The frequency for fine, course, and combined concrete aggregate samples for PCC Paving and PCC Structures shall be based on the cubic yard (CY) of concrete.
(8) Commercial concrete will be accepted with Certificate of Compliance; no testing is required.
(9) Hot mix asphalt aggregate tests are not required for HMA

## 5.19 SIDEWALKS, CURBS AND GUTTERS

A. Design Standards

Plans for the construction of sidewalks, curbs and gutters are to be submitted as part of the street plans when applicable.

The City has set forth minimum standards as shown in details, which must be met in the design and construction of sidewalks, curbs and gutters. Because these are minimum standards, they may be modified by the City should the City Engineer feel circumstances require variances to minimum design standards.

B. Sidewalks

Sidewalks shall be constructed of Portland Cement Concrete, 4 inches thick (6-inch thick at driveway sections) per Section 8-14 of the Standard Specifications. Sidewalks shall be Class 3,000 psi except at driveway approaches where it shall be Class 4,000 psi.

Sidewalks shall be constructed in accordance these standards and in accordance with the Standard Specification and Standard Details. In the event of a conflict the more rigorous standard shall apply. The City shall

be at liberty to vary required sidewalk dimensional characteristics and location as shown in the standard details to meet localized or existing conditions. Low Impact Development design may be incorporated into the design of the sidewalk if site conditions meet the standards required for Low Impact Development design.

Alternate designs that incorporate Low Impact Development standards may be approved on a case-by-case basis. For example, sidewalk slopes can be reversed (i.e., away from the street) if part of a city approved low impact development design.

C. Curb and Gutter

Cement concrete curb and gutter shall be used for all street edges unless otherwise approved by the Manager. All curbs and gutters shall be constructed of Class 3,000 psi Cement Concrete in accordance with Section 8-04 of the Standard Specifications. Curbs shall be of the vertical face type. No rolled curb and gutter profile will be allowed without specific approval of the Manager. If rolled curbs are approved, all sidewalks abutting the rolled curb shall be a minimum 6-inches thick. Curb cuts may be allowed as an alternative Low Impact Development design.

Extruded curb and gutter per Standard Specifications is allowed only with the specific approval of the City Engineer.

Form and subgrade inspection by the City are required before curb and gutter are poured.

Forms, wood or steel, shall be staked securely in place, true to line and grade.

Sufficient support shall be given to the form to prevent movement in any direction, resulting from the weight of the concrete or the concrete placement. Forms shall not be set until the subgrade has been compacted within one inch of the established grade. Forms shall be clean and well oiled prior to setting in place. When set, the top of the form shall not depart from grade more than 1/8 inch when checked with a 10-foot straightedge. The alignment shall not vary more than 1/4 inch in 10 feet. Immediately prior to placing the concrete, forms shall be carefully inspected for proper grading, alignment and rigid construction. Adjustments and repairs as needed shall be completed before placing concrete.

The subgrade shall be properly compacted and brought to specified grade before placing concrete. The subgrade shall be thoroughly dampened immediately prior to the placement of the concrete. Concrete shall be spaded and tamped thoroughly into the forms to provide a dense, compacted concrete free of rock pockets. The exposed surfaces shall be floated, finished and brushed longitudinally with a fiber hair brush approved by the City's inspector and/or engineer.

The face form of the curb shall be stripped at such time in the early curing as will enable inspection and correction of all irregularities that appear thereon.

Forms shall not be removed until the concrete has set sufficiently to retain its true shape. The face of the curb shall be trawled with a tool cut to the exact section of the curb and at the same time maintain the shape, grade and alignment of the curb. The exposed surface of the curb shall be brushed with a fiber hair brush.

Joints shall be cleaned and edged as shown on the drawings. All expansion and contraction joints shall extend entirely through the curb section above the pavement surface. Joint filler in the curb shall be normal to the pavement and in full and constant contact with pavement joint filler.

D. ADA Curb Ramps

All sidewalks must be constructed to provide for curb ramps in accordance with the current standards of applicable state law. Details provided herein are minimum and subject to change. It is the Developer's responsibility to verify current ADA requirements and install same per current standards even if the City has approved of construction drawings with non-compliant ADA requirements.

Curb Ramps shall be constructed of Cement Concrete. Form and subgrade inspection by the City are required before the curb ramp is poured.

E. Testing

Testing shall be required at the developer's or contractor's expense on all materials and construction as specified in the WSDOT Standard Specifications.

At a minimum, one slump test and two test cylinders shall be taken once per day. All other testing frequencies shall be as specified in Section 5.19.

## 5.20 ILLUMINATION

A. General

Illumination shall be required unless otherwise directed by the City Council. The illumination shall provide a minimum intensity of 0.4-foot candles within the right-of-way. The design shall be approved by Snohomish County PUD and the City. All power supply conduit and cables shall be underground.

B. Decorative Street Lighting

Properties that develop or redevelop shall install decorative streetlights in accordance with City standards and the City's Decorative Illumination Map.

These lights shall be installed at a maximum spacing of 80 feet and located in back of the sidewalk and within the right-of-way. Conduit and wiring shall be installed to allow for continuation of the circuit(s) and to provide power to each light.

**City Standard – Lumec (Philips)** and available through Seatac Lighting.

| | |
|---|---|
| Pole | AM6U-12-BAS16-GN8TX |
| Luminaire | 31" x 18.5-in cast 356 aluminum L80-40W49L-ES- PC-CS-LE3-120-SF80-GN8TX |
| Shielding | L80-70HPS-PC-CS-SE3-SF80-HS (if required) |
| Bulb | LED Lumileds Rebel ES. Composed of 49 high-performance white LEDs, 40w lamp wattage. Color temperature of 4000 Kelvin nominal, 70 CRI |
| Bracket | GFI-GN8TX to include duplex receptacle, 15 A, 120 volts, GFI type complete with weatherproof cover. |
| Color | Dark Forest Green Textured (GN8TX) |

## 5.21 SIGNALS

A. General

Signalization will be required if warranted as determined by an existing study and/or transportation study performed by the Developer at the request of the City. The developer shall pay the entire cost of signalization if it is warranted, or wait until the City has procured sufficient monies to cause signalization improvements at the intersection(s). All components of the signal shall become the property of the City upon project acceptance.

## 5.22 ROADSIDE FEATURES

A. General

Miscellaneous features included herein shall be developed and constructed to encourage the uniform development and use of roadside features wherever possible.

B. Design Standards

The design and placement of roadside features included herein shall adhere to the specific requirements as listed for each feature.

C. Survey Monuments

1. All existing (or new) survey control monuments and/or markers which are disturbed, lost, or destroyed during surveying or building shall be replaced with the proper monument as outlined below by a land surveyor currently registered (licensed) in the State of Washington at the expense of the responsible contractor, builder or developer.

2. A precast concrete monument with cast iron monument case and cover installed per City of Granite Falls Standards is required.

   If the monument case and cover are placed in cement concrete pavement, the precast base will not be necessary.

3. Monument Locations

   Appropriate monuments shall be placed:

a. At all street intersections;

b. At the PC and PTs of all horizontal curves;

c. At PI of all horizontal curves of streets where the PI lies within the limits of the traveled roadway;

d. At all corners, control points and angle points around the perimeter of subdivisions as determined by the City;

e. At all section corners, quarter corners, and sixteenth corners that fall within the right-of-way.

D. Mailboxes

1. During construction, existing mailboxes shall be accessible for the delivery of mail or, if necessary, moved to a temporary location. Temporary relocation shall be coordinated with the local U.S. Postal Service. The mailboxes shall be reinstalled at the original location or to a new location as may be required by the local Postmaster, as further outlined below and approved by the U.S. Postal Service.

2. Location

a. Bottom or base of box shall be 41" to 45" above the road surface.

b. Front of mailbox 0 to 12 inches behind vertical curb face or outside edge of shoulder.

c. New developments. Clustered mailboxes will, in all likelihood, be required. Contact the U.S. Postal Service for details. Sidewalks shall be constructed to facilitate same.

d. Buck-outs in sidewalks and sidewalk realignment may be required to maintain minimum sidewalk width behind the mailbox.

3. Mailboxes shall be set on posts strong enough to give firm support but not to exceed 4-inch x 4-inch wood or one 1-1/2-inch-diameter pipe, or material and design with comparable breakaway characteristics. Deviations may be allowed only with the written approval of the City.

E. Guardrails

For purposes of design and location, all guardrails along roadways shall conform to the criteria of the "Washington State Department of Transportation Design Manual" as may be amended or revised.

F. Rock Walls

1. Rock walls may be used for erosion protection of cut embankments up to a maximum height of 3 feet in stable soil conditions, which will result in no significant foundation settlement or outward thrust upon the walls. For heights over 3 feet or when soil is unstable, a structural wall of an acceptable design, stamped by a structural engineer currently licensed in the State of Washington, shall be used and the design shall be approved by the City. Design and construction shall be per the Association of Rockery Contractors (ARC) Specifications and/or applicable geotechnical recommendations. Rock walls over 8-feet high shall be subject to inspection by a geotechnical engineer as outlined in the following paragraph.

2. Any rock wall with an exposed surface over 30-inches high in a fill section shall require an engineered design by a geotechnical engineer. The geotechnical engineer shall inspect the installation of the wall as it progresses and shall submit inspection reports, including compaction test results and photographs taken during the construction, documenting the techniques used and the degree of conformance to the geotechnical engineer's design.

3. The rock material shall be as nearly rectangular as possible. No stone shall be used which does not extend through the wall. The rock material shall be hard, sound, durable and free from weathered portions, seams, cracks and other defects. The rock density shall be a minimum of 160 pounds per cubic foot.

4. The rock wall shall be started by excavating a trench having a depth below subgrade of one half the base course or 1 foot (whichever is greater).

5. Rock selection and placement shall be such that there will be minimum voids and, in the exposed face, no open voids over 6 inches across in any direction. The final course shall have a continuous appearance and shall be placed to minimize erosion of

the backfill material. The larger rocks shall be placed at the base of the rockery so that the wall will be stable and have a stable appearance. The rocks shall be placed in a manner such that the longitudinal axis of the rock shall be at right angles or perpendicular to the rockery face. The rocks shall have all inclining faces sloping to the back of the rockery. Each course of rocks shall be seated as tightly and evenly as possible on the course beneath. After setting each course of rock, all voids between the rocks shall be chinked on the back with quarry rock to eliminate any void sufficient to pass a 2-inch square probe.

6. The rock wall backfill shall consist of quarry spalls with a maximum size of 6 inches and a minimum size of 4 inches or as specified by a licensed engineer. This material shall be placed to a 12-inch minimum thickness between the entire wall and the cut or fill material. The backfill material shall be placed in lifts to an elevation approximately 6 inches below the top of each course of rocks as they are placed, until the uppermost course is placed. Any backfill material on the bearing surface of one rock course shall be removed before setting the next course.

7. Perforated drainage pipe and filter fabric shall be installed as required by the City.

G. Street Trees and Landscaping Items

Preservation of natural vegetation and healthy, existing mature trees, (particularly conifers) is preferred if available on the site. Otherwise, street trees and/or landscaping items (including irrigation if appropriate) shall be furnished and installed as may be specifically required by the City. If such is required, landscaping shall be of one of the referenced types as specified herein or in the Snohomish PUD "Tree Book" (available at: http://www.snopud.com/Site/Content/Documents/custpubs/TreeBook313-web.pdf) and/or as otherwise may be approved by the City. These landscaping items, including trees and irrigation, shall be furnished and installed at the City's sole discretion, direction, and approval. Exact size, spacing, type, location, and quantity to be as specified by the City.

Hedges are not allowed on planter strips. Trees or low shrubs (<2.5 feet) are acceptable. Trees must be planted to the following standards:

- 3 feet back from the face of curb.
- 5 feet from underground utility lines.
- 10 feet from power poles (15 feet recommended).

- 7-1/2 feet from driveways (10 feet recommended).
- 20 feet from street lights or existing trees.

The following trees are prohibited from the Right-of-Way:

- Acer Macrophyllum (Big Leaf Maple, Oregon Maple).
- Populus Trichocarpa, P. deltoides (Cottonwoods)
- Populus Nigra (Lombardy Poplar)

These species have aggressive roots. The wood of some species is brittle and can break in the wind. Trees planted next to low impact development facilities such as porous pavements should have minimal tree litter. Recommended trees for bioretention areas are referenced in Appendix 1 of the Low Impact Development Technical Guidance Manual for Puget Sound. Trees to be planted in City right-of-way, or right-of-way to be dedicated to the City, shall be approved by the City prior to planting. The City reserves the right to remove any tree not so approved.

The following is a list of trees acceptable for planter strips. Other tree species may be allowed at the City's discretion:

**Acceptable Tree Planting**

| ***Botanical Name*** Common Name | **Height in Feet** | **Spread in Feet** | **Flowers** | **Fall Color** | **Comments/Notes** |
|---|---|---|---|---|---|
| ***Acercampestre*** Hedge Maple | 20 | 20 | | Yellow | Prefers Moist Soil |
| ***Acerginnala*** 'Evelyn' Queen Elizabeth Maple | 35 | 30 | | Yellow | Tolerates heat, cold, and drought |
| ***Acer Palmautum*** Japanese Maple | 25 | 25 | | Orange/Red | Filtered Shade |
| ***Amelanchier X*** Juneberry | 20 | 15 | White | Orange/Red | Bright Fall Colors |
| ***Cornus Kousa*** Japanese Dogwood | 30 | 25 | White | Raspberry like Fruit | Dense Foliage |
| ***Crataegus crus-galli*** 'Inermis' | 25 | 30 | Small | Orange to | Red persistent |

| ***Botanical Name***<br><br>Common Name | **Height in Feet** | **Spread in Feet** | **Flowers** | **Fall Color** | **Comments/Notes** |
|---|---|---|---|---|---|
| Thornless Cockspur Hawthorn | | | White | Scarlet | fruit |
| ***Crataegus X lavalii***<br><br>Lavalle Hawthorn | 25 | 20 | Small White | Bronze | Thorns on younger trees |
| ***Crataegus phaenopyrum***<br><br>Washington Hawthorn | 25 | 20 | Small White | Scarlet | Thorny |
| ***Cornus Mas***<br><br>Cornelian Cherry Dogwood | 25 | 20 | Yellow | Red/Yellow | Cherry like Fruit |
| ***Magnolia grandiflora***<br><br>'Victoria' | 25 | 20 | White | Evergreen | |
| ***Malus***<br><br>'Tschonoskii' | 28 | 14 | White | Scarlet | Sparse green fruit, pyramidal |
| ***Prunus x hillieri***<br><br>'Spire' | 30 | 10 | Pink | Orange Red | |
| ***Pyrus calleryana***<br><br>'Capital' Pear | 35 | 12 | White | Reddish Purple | Smaller than 'Aristocrat', may break up in snow |
| ***Pyrus calleryana***<br><br>'Aristocrat' Pear | 40 | 45 | White | Red | |
| ***Pyrus calleryana***<br><br>'Redspire' Pear | 35 | 25 | White | Yellow to Red | Pyramidal |
| ***Pyrus calleryana***<br><br>'Autumn Blaze' Pear | 30 | 25 | White | Scarlet | Vigorous |
| ***Sorbus Tianshanica***<br><br>Red Cascade Mt. Ash | 16 | 8 | White | Yellow/ Orange | Orange Red Fruit |

| ***Botanical Name***<br><br>Common Name | **Height in Feet** | **Spread in Feet** | **Flowers** | **Fall Color** | **Comments/Notes** |
|---|---|---|---|---|---|
| ***Sorbus x hybridia***<br><br>Oakleaf Royal Mt. Ash | 30 | 20 | White | Rust | |
| ***Styras japonica***<br><br>Japanese Snowbell | 25 | 25 | White | Yellow | Plentiful, green 1/2" seeds. |
| ***Tilia cordata***<br><br>'De Groot' Linden | 30 | 20 | | Yellow | Compacts, suckers less than other Lindens. |

## 5.23 PARKING LOTS

Plans shall be submitted for review and approval by the City prior to the work being completed. The Plans and any other submittals shall address storm drainage discharge and onsite retention or detention, connection to street and/or sidewalk, access locations, and parking layout. The City shall also check for future street improvement conformity and City zoning regulations.

Where possible, parking areas should be placed near the entrance to the site to reduce long driveways and impervious areas

Parking lot surfacing materials shall satisfy the requirement for a permanent all-weather surface. Asphalt concrete pavement and cement concrete pavement satisfy this requirement and are approved materials. Gravel surfaces are not acceptable or approved surface material types.

Internal driving lanes within parking lots shall be a minimum of 24-feet wide if parking spaces are oriented between 90 degrees and 45 degrees from the driving lane. The minimum width for the driving lane shall be 20 feet if angle parking is oriented at less than 45 degrees from the driving lane.

## 5.24 UTILITIES

Utilities shall be furnished and installed within the right-of-way beneath new roads, or in existing roadways and rights-of-way so as to provide minimal interference with existing utilities and shall be located as generally shown in Standard Details listed herein. Where existing utilities are in place, new utilities shall conform to these Standards as nearly as practical and yet be compatible with the existing installations. Exceptions may be approved by the City when necessary to meet

special or localized requirements. Utilities shall be sized and designed to serve adjacent and tributary areas. Typically, utilities shall be required to be extended to "far" property lines. Easements shall be procured and provided by the developer to facilitate same. Utilities shall not be "land locked."

A. Sanitary Sewers

See Chapter 8.

B. Waterlines

See Chapter 7.

C. Other Utilities

Other utilities (gas, power, telephone, and cable TV) shall be located as follows: underground, either side of road, at plan location and depth compatible with other utilities and storm drains.

If site topography or other site conditions prevent reasonable underground installation utilities shall be on poles (as applicable) set back of ditchline, sidewalk or curb, at locations compatible with driveways, intersections, and other essential road features. To extent practical, utilities should share facilities so that a minimum of poles are needed, and preferably on only one side of road.

Notwithstanding other provisions, underground systems shall be located at least 5 feet away from road centerline and where they will not otherwise disturb existing survey monumentation.

D. Utility Crossings in Existing Streets

For smaller diameter pipes and wires the crossing shall be made without surface cut of the traveled portion where the street is of oil mat or better. The crossing shall be made by pushing or boring a pipe under the road. Where rock is known or expected in the area of the crossing, the attempt need not be first, open cutting will be permitted, but prior approval of the City is required.

## 5.25 ASPHALT CONCRETE PEDESTRIAN PATHS AND/OR BIKEWAYS

A. Minimum Easement or Right-of-Way Width: Fifteen feet minimum. Unless otherwise approved by City Engineer.

B. Constructed Width: Five feet minimum. Greater widths may be required by the City up to 12 feet maximum.

C. Subgrade: Prepared per Section 2.06 of the Standard Specifications.

D. Gravel backfill for foundations (Class A) shall be used as required.

E. Crushed rock base course shall conform to Section 9-03.9(3) of the Standard Specifications at a depth of one and one-half inch minimum. Greater depths may be required by the City Engineer based on use and local ground conditions.

F. Crushed rock top course shall conform to Section 9-03.9(3) of the Standard Specifications at a minimum depth of 1-1/2 inch. Greater depths may be required by the City Engineer based on use and local ground conditions.

G. Paving course shall be 2-inches hot mix asphalt concrete. Greater depths may be required by the City Engineer based on use and local ground conditions.

# CHAPTER 6

# STORM DRAINAGE STANDARDS

## 6.1 GENERAL

The standards established by this chapter are intended to represent the **minimum** standards for the design and construction of storm drainage facilities. Greater or lesser requirements may be mandated by the City due to localized conditions. Storm drainage revisions, additions, modification, or changes shall be made in compliance with City standards, ordinances, and Best Management Practices as identified in the Washington State Department of Ecology Stormwater Management Manual for Western Washington as adopted by the City, herein after referred to as "Stormwater Manual". Adequate provisions shall be made for storm drainage, storm sewers, and associated appurtenances sufficient to transmit maximum runoff from the 25-year, 24-hour event. All storm drainage facilities shall be designed by a professional engineer licensed in the State of Washington and shall comply with the Stormwater Manual.

If warranted based on the condition and capacity of the existing storm drainage infrastructure (or lack thereof) and, impacts caused by the proposed development, off-site improvements may be required, at the City Engineer's discretion, to mitigate impacts caused by the proposed development.

## 6.2 DESIGN STANDARDS

On-site detention or infiltration systems shall be provided to ensure that post development stormwater discharge is in accordance with the Stormwater Manual. The design of storm drainage and detention systems shall depend on their type and local site conditions. The design elements of storm drainage systems shall conform to City Standards as set forth herein. The following design considerations shall apply:

A. Plan shall show in tabular format:

1. Site Area;

2. Existing impervious area;

3. Existing impervious area to be converted to pervious;

4. Proposed new pervious area;

5. Net new impervious area.

B. All runoff shall be captured prior to leaving the property so that neighbors are not impacted by stormwater runoff from new construction, reconstruction of fill and grade activities.

C. Storm drain detention systems shall be, at a minimum, designed and constructed in strict compliance with the Stormwater Manual and any amendments thereto. Local prevailing conditions may warrant higher standards as determined by the City. Plans for storm drainage shall indicate where the stormwater will be treated, detained, and discharged or infiltrated. The plans and drainage calculations must show that the pipes and channels downstream from the discharge point (a minimum of 1/4 mile) can carry the runoff without damage to the adjoining properties or surcharging of the system. The City Engineer may require that the downstream analysis be continued to incorporate sensitive areas such as steep slopes. Provisions shall be made for detainage and/or retainage of stormwater in order to control the amount of storm runoff to the Standards in the Stormwater Manual.

D. Maximum catch basin spacing shall be 200 feet on road grades up to 3 percent, 400 feet when the road grade is 3 percent or greater. No surface water (unless otherwise approved in writing by the City Engineer) shall cross any roadway. In addition, catch basins shall be placed whenever the length of surface drainage exceeds 300 feet on road grade, extending either direction from crest or sag on vertical curves. Vaned grates shall be employed on street grades exceeding 6 percent slope.

E. Where storm drains run outside an existing public right-of-way, permanent easements will be required for public or private maintenance as may be required and warranted. Such easement shall be a minimum of 15 feet in width unless otherwise approved or required by the City. A construction (temporary) easement of suitable width shall also be provided.

F. The Developer and/or Homeowners Association shall enter into a formal, legally binding agreement, as approved by the City Attorney, regarding the landowner's duties and obligations regarding their ownership, operation and maintenance of the system.

G. All portions of publicly owned and maintained detention and or infiltration facilities shall be in public right-of-way or dedicated land tracts.

H. All infiltration systems shall be open at the top to allow for maintenance. No underground, open bottom tanks, vaults, pipes or similar structures are allowed for infiltration.

I. Storm drainage detention ponds shall have a minimum side slope of 3:1 (H:V). The perimeter fence shall be 6 feet high and landscaped so as to hide the fence. Maintenance vehicle access shall be provided at a maximum of 1:6 (V:H).

## 6.3 CONVEYANCE

Pipe: Storm drain pipe within a public right-of-way or easement shall be sized to carry the 25-year runoff from the contributing tributary area.

The minimum pipe size shall be 12 inches diameter. Runoff shall be computed and, if the flow requires it, a larger pipe shall be used. Nothing shall preclude the City from requiring the installation of a larger sized main if the City determines a larger size is needed to serve adjacent areas or for future service.

Storm drain gradients shall assume a minimum flow velocity of 2 feet per second. All pipe for storm mains shall be "pre-approved" by the City's Engineer based on localized conditions.

A. Storm drain pipe shall meet the following requirements:

1. Plain concrete pipe conforming to the requirements of AASHTO M 86, Class 2.

2. Reinforced concrete pipe conforming to the requirements of AASHTO M 170.

3. PVC pipe shall conform to ASTM D 3034-73 SDR 35 for 4" thru 15" diameter PVC pipe, and shall conform to ASTM F 679 for 18" thru 27" diameter PVC pipe, with joints and gaskets conforming to ASTM D 3212 and ASTM F 477.

4. Ductile iron pipe conforming to the requirements of ANSI A21.51, and AWWA C 151, thickness class as approved by City Engineer.

5. Polyethylene smooth wall pipe per Advanced Drainage Systems (ADS) N-12, bell and spigot, constructed per Standard Specifications 7-04.

6. High performance polypropylene smooth wall pipe per ADS, bell and spigot, constructed per Standard Specifications 7-04.

## 6.4 CONNECTIONS

Connections of storm drain pipe leading from an existing or new street into an existing main storm pipe may only be made with a new structure, such as a catch basin

## 6.5 STREET PATCHING AND RESTORATION

See Sections 5.15, 5.16, and 5.17 for requirements regarding street patching, trench restoration, and surfacing requirements.

## 6.6 CLEANING AND TESTING

Upon completion of work, the constructed storm drainage system shall be cleaned and tested in accordance with the Standard Specifications. Videotaping shall be completed in accordance with Section 7.6, Videotaping for Sanitary Sewers.

See Section 4-11 for final acceptance.

If approved by the City Manager, water for flushing shall be made available and obtained from the City. However, the City reserves the right to operate all hydrants at times and locations convenient to their schedules and available personnel. Any connection made to the City water system, at any time, shall have an appropriate backflow prevention device.

## 6.7 INSPECTION

The Contractor shall request for inspection a minimum of 48 hours prior to the Contractor's scheduled need. Inspection shall be required for the following items of work:

A. Pipe and bedding installation.

B. Backfill and compaction.

C. Grouting catch basins.

Upon completion of the project all storm sewer installations shall be inspected with television inspection equipment. The Contractor shall provide the City with a copy of the inspection and shall have the City present during the television inspection.

# CHAPTER 7

# SANITARY SEWER STANDARDS

## 7.1 GENERAL

The standards established by this chapter are intended to represent the **minimum** standards for the design and construction of sanitary sewer facilities. Greater or lesser requirements may be mandated by the City due to localized conditions. Washington State Department of Ecology's Design Standards shall also be employed by the City in its review and approval of system connections, extensions, and/or modifications.

"Off-site" improvements may be warranted based on (1) the existing condition and capacity of the existing sanitary infrastructure; and (2) impacts caused by the proposed development. These off-site improvements (in addition to "on-site" improvements as may be warranted) will be as determined by the City Engineer so as to reasonably mitigate impacts caused by development.

The following design and construction considerations shall apply:

## 7.2 DESIGN STANDARDS

The design of sanitary sewer systems shall be dependent on local site conditions. The design elements of sanitary sewer systems shall conform to minimum City Standards set forth herein.

A. Detailed plans shall conform with the requirements of the Plan Checklist presented in the appendices.

B. Construction of new sewer systems or extensions of existing systems will be allowed only if the existing receiving system is capable of supporting the added hydraulic load. Sewers shall be extended to the far property line(s) to facilitate future extensions of same.

C. Collection and interceptor sewers shall be designed and constructed for the ultimate development of the tributary areas.

D. Sewer systems shall be designed and constructed to achieve total containment of sanitary wastes and maximum exclusion of infiltration and inflow.

E. Computations and other data used for design of the sewer system shall be submitted to the City for approval.

F. All sewers shall be designed to prevent damage from superimposed loads. Proper allowance for loads on the sewer because of the width and depth of trench should be made. When standard-strength sewer pipe is not sufficient, extra-strength pipe shall be used.

G. All pipe shall be laid in straight lines and at uniform rate of grade between manholes. Variance from established line and grade shall not be greater than 1/2 inch, provided that such variation does not result in a level of reverse sloping invert; provided, also, that variation in the invert elevation between adjoining ends of pipe, due to non-concentricity of joining surface and pipe interior surfaces, does not exceed 1/64 inch per inch of pipe diameter, or 1/2 inch maximum. Any corrections required in line and grade shall be reviewed with the City and/or the City Engineer and shall be made at the expense of the Developer and/or Contractor.

H. Deflection tests shall be performed on all PVC sewer mains as discussed below.

I. Prior to final inspection, all pipelines shall be tested, flushed and cleaned and all debris removed. A pipeline "cleaning ball" of the proper diameter for each size of pipe shall be flushed through all pipelines prior to final inspection.

J. Before sewer lines are accepted, the Contractor/Developer shall perform a complete televised inspection of the sewer pipe and appurtenances and shall provide to the City an audio-visual tape recording of these inspections. All equipment and materials shall be compatible with existing City equipment. It shall be the Contractor/Developer's responsibility to confirm equipment compatibility with the City prior to inspection. The City's Manager and/or his designated representative shall be notified 48 hours prior to any televised inspection.

## 7.3 GENERAL REQUIREMENTS

A. Work shall be performed only by licensed and bonded contractors with a demonstrated experienced in laying public sewer mains of the type being proposed for construction.

B. Prior to any work being performed, the Contractor shall contact the Manager or City Engineer to set forth his proposed schedule.

C. Contractor shall obtain approval of materials to be used from the City prior to ordering or delivery of materials.

D. Generally, the sewer main shall be laid only in dedicated street right-of-way or easements at least 15-feet wide shown on preliminary plats or which have been exclusively granted to the City. A street is normally not officially recognized until the plat, which created it has been filed (recorded) with the County Auditor.

E. The sewer main shall run parallel to and 6 feet southerly or westerly of street centerline where possible. The sewer main shall maintain a minimum 10-foot horizontal and 18-inches vertical separation from proposed or existing water mains.

F. The maximum distance between manholes shall be 400 feet unless specifically approved otherwise by the City Engineer.

G. The allowable cover (finished grade) for the various types of pipe are:

| | |
|---|---|
| PVC Pipe: | 4' to 20' |
| D.I. Pipe (CL 52): | <4' (if allowed) |
| D.I. Pipe (CL 52) or PVC C900: | >20' or Slopes of 18 percent or greater |

All pipe shall have a minimum of 36 inches of cover (18 inches in the case of a side sewer on private property).

H. The minimum slope for 8-inch gravity mains shall be 0.5 percent (except the minimum slope for dead end runs shall be 1.0 percent for 8-inch gravity mains) and the minimum slope for 6-inch side sewer laterals shall be 2.0 percent.

I. All side sewer laterals shall be of the same material as the main line.

J. Each side sewer lateral shall be equipped with a 6" x 6" tee, with an approved water-tight cap, located adjacent to, but within, the public right-of-way, to be utilized as a clean-out. A watertight six-inch capped stub shall be installed which extends vertically from the 6" x 6" tee to the finished grade.

K. Each side sewer lateral shall have an approved water-tight cap at the termination of the stub, it shall be adequately “blocked” to satisfactorily resist the air pressure testing.

L. Each parcel shall have its own side sewers. Multi-family buildings or mixed use buildings shall have a side sewer for each building.

M. Each side sewer lateral shall have a 12-foot-long 2" x 4" wood "marker" at the termination of the stub. The "marker" shall extend from the bottom of the trench to above finished grade. Above the ground surface, it shall be painted "white" with "S/S" and the depth, in feet, stenciled in black letters 2-inch high.

N. Front lot corners shall be staked by a surveyor prior to construction for side sewer tee location(s).

O. Side sewer connections if allowed directly into manholes shall be constructed to match the sewer main crown (outlet) and the manhole channeled accordingly.

P. Manholes, where sewer extension may occur, shall be provided with knock-outs and channeled accordingly.

Q. Manholes shall be provided with a 0.10 foot drop across the channel. Prechanneled manholes are <u>not</u> allowed.

R. Locking lids shall be provided for all manholes located outside pavement areas and all manhole lids shall have the word "sewer" cast integrally onto its surface. See Standard Detail.

S. Concrete collars shall be placed around all frames per the Standard Detail for manholes located in non-paved areas.

T. Pipe connections to manholes shall be as follows:

1. **PVC Pipe:** Cast or grout a watertight manhole coupling (see detail) into manhole wall.

2. **DI Pipe:** Bell and spigot joint or flexible coupling, either shall be 12-inch maximum distance from manhole wall.

3. **PVC and DI Pipe, Optional:** Core the manhole and connect sewer pipe with a water-tight flexible rubber boot in manhole wall, Kor-N-Seal boot or equal.

U. Provide the City's Engineer and City Inspector a copy of the cut sheets prior to construction.

V. Pipe trenches shall not be backfilled until pipe and bedding installation have been inspected and approved by the City's Inspector.

W. Final air testing shall not be accepted until all other underground utilities have been installed, and the lines have been flushed and cleaned and the first lift of asphalt is in place.

X. Manhole rim and invert elevations shall be field verified after construction by the Developer's engineer(s) and the "record" drawings individually stamped by a Washington State licensed professional engineer or surveyor who shall attest to the fact that the information is correct. Acceptance of the project will not be complete until the record drawings have been submitted and approved by the City.

Y. All commercial, industrial, or school food establishments shall be equipped with an approved grease interceptor. The grease interceptor shall be located to facilitate inspection and maintenance.

## 7.4 MATERIALS

A. Sewer Mains, Laterals and Force Mains

Gravity PVC pipe (15-inch diameter and smaller) shall be a minimum Class SDR 35 and be manufactured in accordance with ASTM D3034. The pipe and fittings shall be furnished with bells and spigots, which are integral with the pipe wall. Pipe joints shall use flexible elastomeric gaskets conforming to ASTM D3212. Nominal laying lengths shall be 20 feet and 13 feet.

The ductile iron pipe shall conform to ANSI/AWWA C151/A21.51-91 Standards, and current amendments thereto, except the ductile iron pipe shall be thickness Class 50 for gravity sewers and Class 52 for force mains. Grade of iron shall be a minimum of 60-42-10. The pipe shall be cement lined to a minimum thickness of 1/16 inch, and the exterior shall be coated with an asphaltic coating. Each length shall be plainly marked with the manufacturer's identification, year case, thickness, class of pipe and weight. Note: Force mains shall be constructed of fused HDPE (SDR 11, minimum wall thickness). PVC or ductile force mains may be approved by the City in special circumstances and if the force main is between 4-feet and 8-feet deep.

The type of joint shall be mechanical joint or push-on type, employing a single gasket, such as "Tyton," except where otherwise calling for flanged ends. Bolts furnished for mechanical joint pipe and fittings shall be high strength ductile iron, with a minimum tensile strength of 50,000 psi.

Restrained joint pipe, where required shall be push-on joint pipe with "Fast Tight" gaskets as furnished by U.S. Pipe or equal for 12-inch diameter and smaller pipe and "TR FLEX" as furnished by U.S. Pipe or equal for 16-inch and 24-inch-diameter pipes. Mechanical joint pipe with retainer glands (grip rings) as manufactured by "Romac" may also be required at the discretion of the City. The restrained joint pipe shall meet all other requirements of the non-restrained pipe.

All pipe shall be jointed by the manufacturer's standard coupling, be all of one manufacturer, be carefully installed in complete compliance with the manufacturer's recommendations.

All fittings shall be short-bodied, ductile iron complying with applicable ANSI/AWWA C110 or C153 Standards for 350 psi pressure rating for mechanical joint fittings and 250 psi pressure rating for flanged fittings. All fittings shall be cement lined and either mechanical joint or flanged, as indicated on the Plans.

Fittings in areas shown on the Plans for restrained joints shall be mechanical joint fittings with a mechanical joint restraint device. The mechanical joint restraint device shall have a working pressure of at least 250 psi with a minimum safety factor of 2:1 and shall be EBAA Iron, Inc., MEGALUG, or ROMAC "Grip Ring", as required and approved by the City Engineer.

All couplings shall be ductile iron mechanical joint sleeves.

The sewer pipe, unless otherwise approved by the City Engineer, shall be laid upgrade from point of connection on the existing sewer or from a designated starting point. The sewer pipe shall be installed with the bell end forward or upgrade. When pipe laying is not in progress, the forward end of the pipe shall be kept tightly closed with an approved temporary plug. Wherever movable shoring (steel box) is used in the ditch, pipe shall be restrained by use of a winch mounted in the downstream manhole and a line of sufficient strength threaded through the pipe and set tight before each move. Any indication that joints are not being held shall be sufficient reason for the City to require restraints, whether or not movable shoring is being used.

All pipe shall be laid in straight lines and at uniform rate of grade between manholes. Variance from established line and grade shall not be greater than 1/2 inch, provided that such variation does not result in a level of reverse sloping invert; provided, also, that variation in the invert elevation

between adjoining ends of pipe, due to non-concentricity of joining surface and pipe interior surfaces, does not exceed 1/64 inch per inch of pipe diameter, or 1/2 inch maximum. Any corrections required in line and grade shall be reviewed with the City's Manager and/or City Engineer and shall be made at the expense of the Developer.

All extensions, additions and revisions to the sewer system, unless otherwise indicated, shall be made with sewer pipe jointed by means of a flexible gasket, which shall be fabricated and installed in accordance with the manufacturer's specifications.

All joints shall be made up in strict compliance with the manufacturer's recommendations and all sewer pipe manufacture and handling shall meet or exceed the ASTM and CPAW recommended specifications, current revisions.

Pipe handling after the gasket has been affixed shall be carefully controlled to avoid disturbing the gasket and knocking it out of position, or loading it with dirt or other foreign material. Any gaskets so disturbed shall be removed, cleaned, relubricated if required, and replaced before the rejoining is attempted.

Care shall be taken to properly align the pipe before joints are entirely forced home. During insertion of the tongue or spigot, the pipe shall be partially supported by hand, sling or crane to minimize unequal lateral pressure on the gasket and to maintain concentricity until the gasket is properly positioned. Since most flexible gasketed joints tend to creep apart when the end pipe is deflected and straightened, such movement shall be held to a minimum once the joint is home.

Sufficient pressure shall be applied in making the joint to assure that it is home, as described in the installation instructions provided by the pipe manufacturer. Sufficient restraint shall be applied to the line to assure that joints once home are held so, until fill material under and alongside the pipe has been sufficiently compacted. At the end of the work day, the last pipe laid shall be blocked in an effective way to prevent creep during "down time."

For the joining of dissimilar pipes suitable adapter couplings shall be used which have been approved by the City Engineer.

All gravity sewer pipe shall be bedded from a depth of 4 inches below the pipe to 8 inches above the pipe and ductile iron gravity sewer pipe shall be bedded from a depth of 4 inches below the pipe to the springline of the

pipe. The bedding material shall extend across the full width of the trench and shall be compacted under the haunches of the pipe.

Clay or Controlled Density Fill (CDF) dams shall be installed across the trench and to the full depth of the granular material in all areas of steep slopes, stream crossings and wetland to prevent migration of water along the pipeline.

All backfill shall be placed and compacted in accordance with City, County, or State requirements as may be applicable and copies of the compaction results shall be provided to the City Engineer.

B. Manholes

Manholes shall be of the offset type and shall be precast concrete sections with either a cast in place base, or a precast base made from a 3,000 psi structural concrete. Joints between precast wall sections shall be confined O-ring or as otherwise specified.

For connections to existing systems, a concrete coring machine, suitable for this type of work, shall be utilized in making the connection. The existing manhole shall be rechanneled as required. The new pipe connection shall be plugged (watertight) until the new pipe system has been installed and approved. The Contractor shall be responsible for any existing defects in the existing manhole unless these defects are witnessed by a representative of the City prior to any work being performed to make the connection. The Contractor shall be required to remove any and all deleterious material in the existing manhole and downstream reaches as a result of this work.

The minimum diameter manhole shall be 48 inches to a depth of 20 feet, and 54 inches for depths greater than 20 feet. The City may require an increased manhole diameter for future connections.

Terminal manholes at the end of the force mains may need protective coating for control of corrosion. Odor control may also be required. The City shall determine the need for either, or both, of these items.

1. Manhole Sections

Manhole sections shall be placed and aligned so as to provide vertical sides and vertical alignment of the ladder steps. The completed manhole shall be rigid, true to dimension, and be watertight. Rough, uneven surfaces will not be permitted.

The mortar used between the joints in the precast sections and for laying manhole adjusting bricks shall be composed of an epoxy non-shrink grout. All joints and pick holes shall be wetted and completely filled with grout, smoothed both inside and outside to ensure water tightness.

2. Manhole Steps

Manhole steps shall be polypropylene, Lane International Corp. No. P13938 or equal. Ladders (maximum 3-foot length) shall be polypropylene Lane International Corp. or equal, and shall be compatible with steps.

3. Grade Adjustment

Where work is located in public right of way, not less than 18 inches or more than 26 inches shall be provided between the top of the cone or slab and the top of the manhole frame.

4. Channels

Channels shall be field poured and made to conform accurately to the sewer grade and shall be brought together smoothly with well rounded junctions, satisfactory to the City Inspector. The channels shall be field poured after the inlet and outlet pipes have been laid and firmly grouted into place at the proper elevation. Allowances shall be made for a 0.1-inch drop in elevation across the manhole in the direction of flow. Channel sides shall be carried up vertically from the invert to three-quarters of the diameter of the various pipes. The concrete shelf shall be warped evenly and sloped 3/8 inch per foot to drain. Rough, uneven surfaces will not be permitted. Channels shall be constructed to allow the installation and use of a mechanical plug or flow meter of the appropriate size.

5. Drop Manholes

Drop manholes shall, in all respects, be constructed as a standard manhole with the exception of the drop connection as shown in the details. Inside drop manholes shall be a minimum of 54 inches in diameter.

6. Lift Holes and Steel Loops

All lift holes shall be completely filled with expanding mortar, smoothed both inside and outside, to insure water tightness. All steel loops shall be removed, flush with the manhole wall. The stubs shall be covered with mortar and smoothed. Rough, uneven surfaces will not be permitted.

7. Frames and Covers:

Frames and covers shall be ductile iron. Castings shall be free of porosity, shrink cavities, cold shuts or cracks, or any surface defects, which would impair serviceability. Repair of defects by welding, or by the use of "smooth-on" or similar material, will not be permitted. Frames and covers shall be machine finished or ground on seating surfaces so as to assure non-rocking fit in any position and interchangeability of covers. Frames and covers shall be provided with three bolt locking lids. Rings and covers shall be positioned so one of the three locking bolts is located over the manhole steps and shall be adjusted to conform to the final finished surface grade of the street or easement to the satisfaction of the City or agent for the City. Manhole frames and covers in paved areas shall have the City logo on them and shall be ERGO type as manufactured by East Jordan Iron Works, per the City's Standard Details.

C. Side Sewer Lateral

A side sewer lateral is considered to be that portion of a sewer line that will be constructed between a main sewer line and a property line or easement limit line.

All applicable specifications given herein for sewer construction shall be held to apply to side sewer laterals.

Each single-family unit or each unit in a duplex shall have its own connection to the sewer main and shall be a minimum 6-inch-diameter pipe. Side sewers shall be connected to the tee, provided in the sewer main where such is available, utilizing approved fittings or adapters. The side sewer shall rise at a maximum of 45° and a minimum of 2 percent, from the sewer main.

Where there are no basements, the minimum side sewer depth shall be 6 feet below existing curb line and 5 feet below ground at the property line,

except where existing improvements, proposed improvements or topography may dictate additional depth. The elevations of the side sewer connections shall be of sufficient depth to serve all existing and potential future basements.

The Contractor shall provide for each 6-inch side sewer service a 12-foot-long 2-inch x 4-inch wooden post, which extends from the invert of the end of the 6-inch pipe to above the existing ground. The exposed area of this post shall be painted white and shall have 2-inch letters (black paint) "S/S" and shall also indicate the depth of the sewer service stub from finished grade.

Where no tee or wye is provided or available, connection to the sewer main shall be made by machine-made tap and saddle, only with specific written authorization of the City. The City shall review the exact location and material, list in its evaluation.

The maximum bend permissible at any one fitting shall not exceed 45°. The maximum bend of any combination of two adjacent fittings shall not exceed 45° unless straight pipe of not less than 3 feet in length is installed between such adjacent fittings, or unless one of the fittings is a wye branch with a cleanout provided on the straight leg.

D. Private Side Sewers

Private side sewers are the extension of side sewer laterals located outside of the public rights-of-way or easements granted to the City of Granite Falls.

1. Side sewer pipe located on private property shall be 4 inches (larger if specifically approved by the City), ductile iron or PVC ASTM D3034 pipe, and shall be installed at a 2 percent minimum grade. Construction on private property may be performed by owner, but requires a permit and approval by the City. Side sewer slopes on private property of 1 percent may be approved by the City in special circumstances if the side sewer is constructed with no greater than 22-1/2° bends and a minimum of 3 feet between bends.

2. Pipe shall be bedded with pea gravel or clean free draining sand.

3. Side sewer shall be inspected by the City's Representative/Inspector prior to backfilling. Side sewer shall be plugged and tested in the presence of the City Inspector by filling with water. Leakage rate shall not exceed 0.31 gal./hr. for 4-inch pipe and 0.47 gal./hr. for

6-inch pipe, per 100 feet of pipe. The distance of the private side sewer shall be measured from the clean out at the property line to entrance into the building.

4. On private property, minimum cover shall be 18 inches over top of pipe from the point, which is 30 inches out from house and continuing to the connection with the City's sewer system. If this depth of bury cannot be achieved due to site constraints Class 52 ductile iron pipe shall be used.

5. Parallel water and sewer lines shall be 10 feet apart horizontally wherever possible and have a vertical separation of 18 inches if a vertical crossing is necessary.

6. No more than 100 feet is allowed between cleanouts. Cleanouts are required for bends equal to or greater than 45°. Cleanout shall be a watertight plugged gasketed tee or wye lateral.

7. All pipe joints shall be rubber gasket type.

8. Provide "grease trap" of a size and type approved by the City at all such locations as may be deemed necessary by the City.

## 7.5 TESTING GRAVITY SEWERS FOR ACCEPTANCE

The Contractor and/or Developer shall furnish all facilities and personnel for conducting tests under the observation of the City Engineer or City Inspector.

A. Preparation for Testing for Leakage

The Contractor and/or Developer shall be required, prior to testing, to clean and flush all gravity sewer lines with an approved cleaning ball and clean water. The completed gravity sewer, including side sewer stubs, after completion of backfill and cleaning shall be televised inspected. This will be permitted prior to paving. The sewer shall then be tested by the low-pressure air test method and/or an infiltration test but only after all utilities are installed. Except, however, that in certain conditions an exfiltration test may be required by the City Engineer.

The first section of pipe not less than 300 feet in length installed by each crew shall be tested, in order to qualify the crew and/or the material. A successful installation of this first section shall be a prerequisite to further pipe installation by the crew. At the Contractor's option, crew and/or material qualification testing may be performed at any time during the

construction process after at least 2 feet of backfill has been placed over the pipe.

Before the test is performed, the pipe installation shall be cleaned. The Contractor shall furnish an inflatable diagonally ribbed rubber ball of a size that will inflate to fit snugly into the pipe to be tested. The ball may, at the option of the Contractor, be used without a tag line, or a rope or cord may be fastened to the ball to enable the Contractor to know and control its position at all times. The ball shall be placed in the last cleanout, or manhole on the pipe to be cleaned, and water shall be introduced behind it.

The ball shall pass through the pipe with only the pressure of the water impelling it. All debris flushed out ahead of the ball shall be removed at the first manhole where its presence is noted. In the event cemented or wedged debris, or a damaged pipe stops the ball, the Contractor and/or Developer shall remove the obstruction, and/or repair any damaged pipe. All visible leaks showing flowing water in pipelines or manholes shall be repaired even if the test results fall within the allowable leakage. The cleaning shall be carried out in such a manner to not infiltrate existing facilities. Precautions shall be taken to prevent any damage caused by cleaning and testing. Any damage resulting shall be repaired by the Contractor and/or Developer at his own expense. The manner and time of testing shall be subject to approval of the Manager and/or the City Engineer.

B. Low-Pressure Air Test

After the installation of the side sewer laterals, the sewer pipe shall be tested for leaks through the use of air in the following manner:

Following the pipe cleaning and televised inspection, the pipe installation shall be tested with low pressure air. Air shall be slowly supplied to the plugged pipe installation until the internal air pressure reaches 4.0 pounds per square inch greater than the average back pressure of any ground water that may submerge the pipe. At least two minutes shall be allowed for temperature stabilization before proceeding further.

The rate of air loss shall then be determined by measuring the time interval required for the internal pressure to decrease from 3.5 to 2.5 pounds per square inch greater than the pipe section's average adjacent groundwater back pressure.

The pipeline shall be considered acceptable if the total time of air loss from any section tested in its entirety between manholes, cleanouts or pipe ends does not exceed the following table:

**AIR TESTING PERFORMANCE**

| Length of 8-Inch Pipe (ft) | Length of 6-Inch Pipe (ft) | | | | | | | | |
|---|---|---|---|---|---|---|---|---|---|
| | **0** | **50** | **100** | **150** | **200** | **250** | **300** | **350** | **400** |
| **0** | 0 | 0:40 | 1:20 | 1:58 | 2:38 | 3:18 | 3:58 | 4:38 | 5:16 |
| **50** | 1:10 | 1:50 | 2:30 | 3:10 | 3:48 | 4:28 | 5:08 | 5:48 | 5:56 |
| **100** | 2:20 | 3:00 | 3:40 | 4:20 | 5:00 | 5:38 | 6:14 | 6:12 | 6:08 |
| **150** | 3:32 | 4:10 | 4:50 | 5:30 | 6:10 | 6:30 | 6:26 | 6:22 | 6:18 |
| **200** | 4:42 | 5:22 | 6:00 | 6:40 | 6:44 | 6:38 | 6:34 | 6:30 | 6:26 |
| **250** | 5:52 | 6:32 | 6:48 | 6:58 | 6:50 | 6:44 | 6:40 | 6:36 | 6:32 |
| **300** | 7:02 | 7:20 | 7:10 | 7:02 | 6:56 | 6:50 | 6:44 | 6:40 | 6:36 |
| **350** | 7:34 | 7:22 | 7:14 | 7:06 | 7:00 | 6:54 | 6:50 | 6:44 | 6:42 |
| **400** | 7:34 | 7:24 | 7:16 | 7:08 | 7:02 | 6:58 | 6:52 | 6:48 | 6:44 |

*Test time in minutes and seconds

Test times will be provided by the City Engineer upon request for combinations other than 8-inch mains and 6-inch laterals.

If the pipe installation fails to meet these requirements, the Developer and/or Contractor shall determine at his own expense the source or sources of leakage, and he shall repair (if the extent and type of repairs proposed by the Developer and/or Contractor appear reasonable to the City Engineer) or replace all defective materials or workmanship. The completed pipe installation shall meet the requirements of this low-pressure air test or the alternative water exfiltration test before being considered for acceptance.

Plugs used to close the sewer pipe and side sewer laterals for the air test shall be securely braced to prevent the unintentional release of a plug, which can become a high velocity projectile. Gauges, air piping manifolds and valves shall be located at the top of the ground. No one shall be permitted to enter a manhole where a plugged pipe is under pressure. Air testing apparatus shall be equipped with a pressure release device such as a rupture disk or a pressure relief valve designed to relieve pressure on the pipe under test at 6 psi.

C. Exfiltration (Water) Test (if approved by City)

The Contractor shall provide a groundwater observation well at each manhole for determining the level of the groundwater during the test. The observation well shall consist of 1-inch plastic pipe installed vertically

adjacent to the manhole. The lower end of the test well shall be placed in a 1 cubic yard pocket of washed gravel and shall be at the same elevation as the invert of the manhole. The upper end of the test well shall be terminated within 2 feet of the finished grade elevation and shall be plugged and exposed until completion of the test.

All pipe shall be cleaned before the exfiltration test. Prior to making exfiltration leakage tests, the Developer and/or Contractor may fill the pipe with clear water to permit normal absorption into the pipe walls; provided however, that after so filling the pipe he shall complete the leakage test within 24 hours after filling. When under test, the leakage allowable shall comply with the provisions that follow:

Leakage shall be no more than 0.15 gallons per hour per inch of diameter per 100 feet of sewer pipe, with a minimum test pressure of 6 feet of water column above the crown at the upper end of the pipe or above the active groundwater table, whichever is higher as determined by the City. The length of pipe tested shall be limited so that the pressure on the invert of the lower end of the section tested shall not exceed 16 feet of water column. For each increase in pressure of 2 feet above a basic 6 feet measured above the crown at the lower end of the test station, the allowable leakage shall be increased by 10 percent.

The Developer and/or Contractor shall furnish all equipment, materials, and labor necessary for making test. The equipment shall be to the approval of the City Manager and/or City Engineer. The manner and time of testing shall be subject to approval of the City Engineer. It shall be the Developer's and/or Contractor's responsibility to determine the level of the water table at each manhole. If leakage exceeds the allowable amount, corrective measures shall be taken and the line then be retested to the satisfaction of the City's designated inspector.

D. Deflection Test

Deflection tests shall be performed on all ASTM D3034 PVC gravity sewer mains by pulling a mandrel through the pipe. The allowable deflection test limit shall be 5.0 percent of the base inside diameter in accordance with APWA test procedures and the nominal mandrel size shown in the following table.

| Nominal Pipe Size (in.) | Base Inside Diameter (in.) | Mandrel Size, Diameter (in.) |
|---|---|---|
| 6 | 5.74 | 5.45 |
| 8 | 7.67 | 7.28 |
| 10 | 9.56 | 9.08 |
| 12 | 11.36 | 10.79 |

Deflection testing is not required for C-900 PVC or ductile iron pipe or pipe diameters 15 inch and greater.

The sewer lines shall be thoroughly cleaned prior to the deflection test.

E. Testing Force Main

Force main shall be tested using the same procedures as water lines.

F. Vacuum Testing of Precast Manholes

Vacuum testing (negative air pressure) may be required by the City in areas of high groundwater. Prior to backfilling, each manhole shall be tested using the vacuum testing method specified in ASTM C1244 to ensure that the manhole is watertight. Testing of manholes constructed on existing sewer lines where flow must be maintained will not be required.

Backfilling of the manhole prior to testing is permitted.

The Contractor shall furnish all equipment and labor required, including necessary piping/hoses, pneumatic plugs, test vacuum equipment (vacuum pump and vacuum plate/head), vacuum gauge, and second timer. The vacuum gauge shall have a maximum range of 0-30 inches of mercury (Hg) and the vacuum gauge intervals shall be in 1/2-inch increments.

The vacuum test shall be performed by the Contractor in the presence of City personnel. The Contractor shall furnish test reports of each test to the Engineer.

G. Testing

If a coating or lining has been applied to the interior of the manhole, the vacuum test must not be performed until the coating or lining has been cured according to the manufacturer's recommendations. In addition, this existing manhole must be structurally sound prior to vacuum testing.

Drop connections shall be installed prior to testing.

The vacuum test shall include testing of the seal between the cast iron frame and the concrete cone, slab, or grade rings.

After cleaning the interior surface of the manhole, the Contractor shall place and inflate pneumatic plugs in all the connecting pipes with the exception of sewer services to isolate the manhole. Complete sewer services entering the manhole shall be a part of the manhole vacuum test.

The vacuum plate/head shall be placed on top of the manhole lid frame. The vacuum pump shall be connected to the outlet port with the valve open. When a vacuum of 10 inches of mercury has been attained, the vacuum pump shall be shut off. With the outlet valve closed, the time shall be measured for the vacuum to drop to 9 inches. Following are the **minimum** allowable test times for manhole acceptance at the specified vacuum drop:

| **Depth of Manhole (feet)** | **Time (Seconds)** | | |
|---|---|---|---|
| | **48-Inch Dia.** | **60-Inch Dia.** | **72-Inch Dia.** |
| 4 | 10 | 13 | 16 |
| 8 | 20 | 26 | 33 |
| 12 | 30 | 39 | 49 |
| 16 | 40 | 52 | 67 |
| 20 | 50 | 65 | 81 |
| 24 | 59 | 78 | 97 |
| 26 | 64 | 85 | 105 |
| 28 | 69 | 91 | 113 |
| 30 | 74 | 98 | 121 |
| Add for each additional 2 feet of depth | 5 | 6.66 | 8 |

Source: ASTM C1244

All pneumatic plugs shall be removed from the manhole after the test.

H. Failure

Any manhole that fails the initial vacuum test must be repaired with an approved non-shrink grout material for manholes. The Contractor shall excavate the manhole and apply non-shrink grout on the interior and exterior of the manhole in the leaking area or the entire surfaces. Any repair between the pipes and the manhole (gasket waterstop area) requires

the removal of the pipe by means of coring and the installation of a new pipe with waterstop (grouting the annular opening). Upon completion of the repairs, the manhole shall be retested as described in the above test procedures.

Any manhole that ultimately fails the vacuum test is rejected and shall be entirely removed and replaced with a new manhole. The new manhole shall not be backfilled until it has been tested and passed the above test procedures.

I. Acceptance

The manhole shall have passed the vacuum test if the manhole vacuum does not drop below 9 inches of mercury during the minimum specified test period.

## 7.6 VIDEOTAPING

After the gravity sewer lines have been cleaned, flushed and manhole channeled, the Developer shall provide a complete televised inspection.

The Developer shall perform a complete televised inspection of the sewer pipe and appurtenances and shall provide to the City, a DVD color audio-visual recording of the inspections together with a written log of the television inspection. The camera shall be a pan and tilt type equipped with adequate light and focusing to allow inspection of sewer main, side sewers and full circumference inspection of main line joints and fittings. The City shall determine if the quality of the televising is acceptable.

Immediately prior to the televised inspection, the Developer shall run water through each sewer line for 5 to 10 minutes to provide water for detection of any adverse grade sections visible by the presence of ponded water. If ponded water is observed the camera shall be stopped periodically at the ponded areas and the depth of water shall be measured with a ball of known diameter on the pull line. During the inspection, all tees and other fittings shall be logged as to exact location within 1 percent maximum error in measurement.

The City shall be notified 48 hours prior to any television inspection and this work shall be performed on a schedule to allow the City to witness the inspection.

Any defects in material or installation identified by the television inspection shall be repaired as required by the City at the Developer's expense.

## 7.7 STATE HIGHWAY CROSSINGS

All state highway crossings shall be completed with a steel casing and a ductile iron or HDPE carrier pipe, as approved by the City and prevailing regulatory agencies. The welded steel casing shall be of sufficient diameter, size and strength to enclose the sewer pipe and to withstand maximum highway or railroad loading. Sizing and wall thickness of casing is subject to approval by the City Engineer. Sand backfill or grout fill between the casing and the sewer pipe shall be required. The sewer pipe shall be restrained joint or continuous welded pipe within the casing pipe. In order to prevent the sand from being washed from the casing the ends of the casing shall be bricked and cemented after installation, backfill and testing of the pipe are completed.

## 7.8 STREET PATCHING AND RESTORATION

See Sections 5.15, 5.16 and 5.17 for requirements regarding street patching, trench restoration, and surfacing requirements.

## 7.9 ADJUSTMENT OF NEW AND EXISTING UTILITY STRUCTURES TO GRADE

This work consists of constructing and/or adjusting all new and existing utility structures encountered on the project to finished grade.

A. Asphalt Concrete Paving Projects

On asphalt concrete paving projects, the manholes shall not be adjusted until the pavement is completed, at which time the center of each manhole lid shall be relocated from references previously established by the Developer and/or Contractor. The pavement shall be cut as further described and base material removed to permit removal of the cover. The manhole shall then be brought to proper grade.

Prior to commencing adjustment, a plywood and visqueen cover as approved by the City Inspector shall be placed over the manhole base and channel to protect them from debris.

As soon as the street is paved past each manhole, the asphalt concrete mat shall be scored around the location of the manhole, catch basin, meter boxes or valve box. After rolling has been completed and the mat has cooled, it shall be cut along the scored lines, the diameter of which shall not exceed 48 inches or 14 inches from the outside diameter of the ductile iron frame, whichever is smaller. The ductile iron frame shall be brought up to desired grade, which shall conform to surrounding road surface.

Adjustment to desired grade shall be made with the use of concrete or bricks. No cast or ductile iron adjustment rings will be allowed. An approved class or mortar (one part cement to two parts of plaster sand) shall be placed between manhole sections; adjustment rings or bricks and ductile iron frame to completely fill all voids and to provide a watertight seal. No rough or uneven surfaces will be permitted inside or out. Adjustment rings or brick shall be placed and aligned so as to provide vertical sides and vertical alignment of manhole steps and ladder.

Check manhole specifications for minimum and maximum manhole adjustment and step requirements. Special care shall be exercised in all operations in order not to damage the manhole, frames and lids or other existing facilities.

The manholes, catch basins, meter boxes and valve boxes shall be raised to finished pavement grade and the annular spaces filled with cement concrete to within 1-1/2 inches of the finished grade. The remaining 1-1/2 inches shall be filled with hot mix asphalt concrete (PG 64-22) to give a smooth finished appearance. See detail in Project Plans.

After pavement is in place, all joints shall be sealed with hot asphalt cement (AR 4000W). A sand blanket shall be applied to the surface of the AR 4000W hot asphalt cement binder to help alleviate “tracking.”

Asphalt concrete patching shall not be carried out during wet ground conditions or when the ambient air temperature is below 50 degrees F. Asphalt concrete mix shall be at required temperature when placed. Before making the asphalt concrete repair, the edges of the existing asphalt concrete pavement and the outer edge of the casting shall be tack coated with hot asphalt cement. The remaining 2 inches shall then be filled with hot mix asphalt concrete and compacted with hand tampers and a patching roller.

The completed patch shall match the existing paved surface for texture, density and uniformity of grade. The joint between the patch and the existing pavement shall then be carefully painted with hot asphalt cement or asphalt emulsion and shall be immediately covered with dry paving sand before asphalt cement solidifies. All debris such as asphalt pavement, cement bags, etc., shall be removed and disposed of by the Developer and/or his Contractor.

Prior to acceptance of a project, manholes shall be cleaned of all debris and foreign material. All manhole steps and ladders shall be cleaned free of

grout. Any damage occurring to the existing facilities due to the Developer's and/or Contractor's operations shall be repaired at his/her own expense.

B. Adjustment of Manholes in Easements

Manholes in easement areas shall be adjusted to insure drainage away from the manhole frame and cover. The manhole frame and cover shall be set approximately 0.1 foot above finished grade. Concrete collars shall be set about the structure, as detailed herein, in all non-paved areas.

C. Adjustment of Valve Box Castings

Adjustment of valve box castings (force main valving) shall be made in the same manner as for manholes.

## 7.10 SANITARY SEWER LIFT STATIONS – SUPPLEMENTAL STANDARDS

A. General

This section is intended to present information and provide an outline of the minimum general standards to be accomplished in planning a sewage lift station installation within the City of Granite Falls service area. Incorporation of a sewage lift station is subject to City review and approval on a case-by-case basis. It is the City's policy to minimize the number of lift stations that must be operated by the City, as well as to minimize the use of lift stations where other means of serving an area exist or have been provided for in the City's comprehensive plan.

Lift stations shall only serve those properties which cannot otherwise be served by conventional gravity sewers and shall be approved on an individual basis by the City. All lift stations shall be designed in strict conformance with the latest edition of the Washington State Department of Ecology's Criteria for Sewage Works Design.

New sanitary sewer lift stations with a suction lift of less than 20 feet shall be Smith & Loveless vacuum prime systems. If site constraints prohibit the reasonable installation of a vacuum prime system the lift station shall be a submersible pump lift station with Flygt pumps. All stations shall be duplex stations with backup generator power connected to the station through an automatic transfer switch. The developer shall pay all costs for the design, construction and integration of the lift station and the cost to integrate lift station operations at the City's master telemetry system at the wastewater treatment plant to allow real time monitoring of the lift station. It shall be

the developer's responsibility to ensure that the lift station telemetry system communicates with the City's telemetry system.

The lift station standards contained herein are intended to apply to a typical duplex sewage lift station within the typical size range for developer-constructed stations and to express the City's general policy with regard to standardization of lift station design and operation. At the City's discretion, stations with non-typical service requirements, such as high flows, high head pressures, flow monitoring, multiple pump operation, critical service or unusual site constraints, may be subject to additional or alternative design requirements.

Due to the inherent complexity of lift station design, and the associated health and safety risks, the lift station design shall be prepared by a professional engineer registered in the State of Washington and with demonstrable experience in lift station design. At the request of the City, the Developer shall provide a resume for the proposed lift station designer, listing similar projects designed by that individual, with references and phone numbers. Once the lift station design has been approved by the City, the design engineer shall remain responsible for all construction-related engineering duties, including the coordination of submittals and shop drawings, and the preparation of field change requests, record drawings and maintenance and operation materials. Engineering responsibilities shall not be reassigned by the Developer without the City's approval.

B. Design Calculations/Design Report

The City, at its option, may direct the City's Engineer to prepare a feasibility study, at the Developer's expense and under a separate agreement with the Developer, prior to granting conceptual approval for the use of a lift station. This feasibility study will address specific design and planning issues identified by the City as necessary for evaluation of the proposal.

The City's Engineer will determine the service area and the associated design flows, consistent with the City's current Comprehensive Plan, at the Developer's expense. The design service area will include the Developer's plat boundary area (or other proposed service area) as well as adjacent and potential future service areas. Documentation regarding the number and type of sewer connections proposed by the Developer shall be furnished to the City's Engineer in sufficient detail to permit the City's Engineer to complete the flow determination.

Once the service area and design flows have been established, the Developer shall then be responsible for providing design calculations and a design report to assure that the lift station installation is sized to serve the overall sewage flows generated within the potential service area.

The effects of the minimum flow conditions shall be estimated to ensure that retention of the sewage in the wet well will not create a nuisance and that pumping equipment will not operate too infrequently. The wet well shall be sized to meet or exceed the pump motor manufacturer's recommendations for the minimum allowable time period between motor starts with the largest pump out of service, the net positive suction head, and the submergence of the pump suctions.

Lift station capacity shall be sufficient to convey the anticipated peak hourly flow into the station. The available capacity of the receiving sewer shall be adequate for the maximum lift station capacity. At least two pumping units shall be provided at each lift station installation. The pump(s) shall have sufficient capacity and capability to efficiently handle the peak design flow with the largest pump out of service and to provide a minimum velocity of 3 feet per second velocity in the force main at single pump flow.

The force main shall be sized for a minimum flow velocity in the force main of 3 feet per second and a maximum of 8 feet per second under full buildout conditions. The minimum diameter of the force main shall be 6 inches, unless otherwise approved by the City's Engineer.

Three copies of the Design Calculations shall be submitted to the City for review. As a minimum, the report shall include:

1. Project description;

2. Projected flows;

3. Connection point with downstream capacity;

4. Wet well sizing;

5. Run time calculations based on peak hourly and average annual flows for startup and ultimate design conditions;

6. Cycle time calculations to verify pump start frequency is within allowable limits, including operation on backup float control;

7. Pump station head calculation to establish system curve;

8. Pump and impeller selection;

9. Force main size, length and material;

10. Force main surge pressure calculation, calculated for sudden loss of power with all pumps operating at full speed;

11. Generator and fuel supply sizing;

12. Buoyancy calculations for buried structures.

The above calculations and evaluation shall be provided for City review and approval in the form of a design report prior to, or together with, the plans for the developer extension. The report shall be stamped by a professional engineer licensed in the State of Washington.

A geotechnical evaluation of the proposed site shall be provided by the Developer, and shall be stamped by a licensed geotechnical engineer. Site or project characteristics to be evaluated shall include, but are not necessarily limited to: steep slopes; groundwater; erosion hazards; unusual drainage conditions; unstable soils; proposed construction on fill; proposed retaining wall construction; wet weather construction; recommendation for backfill, subgrade and foundation materials; and a determination of seismic potential in accordance with local building code. The geotechnical evaluation may be submitted as a supplement to the geotechnical report for the underlying plat, and shall include a minimum of one boring at the proposed wet well/dry well site to a minimum depth of 15 feet below the proposed subgrade elevation.

Following submittal of the design report, the City's Engineer will determine the type of facilities required to mitigate odor at the wet well vent and the force main discharge, consistent with City policy and County and City requirements. The odor mitigation determination will be performed by the City's Engineer at the Developer's expense and will include an evaluation of odor potential and a listing of facilities, equipment, design parameters, and miscellaneous details to be incorporated into the lift station design. Documentation, to include the proposed force main alignment, size and profile, shall be furnished to the City's Engineer in sufficient detail to permit the City's Engineer to complete the odor determination.

C. Permitting

The Developer shall furnish all required permits and variances except those specifically named by the City to be furnished by the City, together with the completed SEPA checklist when required, and shall be responsible for meeting all applicable City, County, State and Federal requirements, including but not limited to the following:

1. Conditional Use Permit;
2. Shoreline Management Permit;
3. SEPA Determination;
4. Fill & Grade Permit;
5. Right-of-Way Permit;
6. Building Permit;
7. Electrical Permit;
8. Compliance with Landscaping, Odor, Seismic and Noise Ordinances;
9. Corps of Engineers 404 Permit.

At the City's discretion, the Developer shall provide written determination of permit applicability from agencies with potential jurisdiction.

D. Design Plans

Once the Design Calculations/Design Report have been approved by the City and the City Engineer has completed the odor mitigation determination, the Developer shall submit to the City for review and approval complete sewage lift station plans and design that provide for the lift station, electrical service, telemetry/SCADA, control panel, pump controls, and auxiliary generator/transfer switch together with all accessories for a complete, automatically operating installation. Design plans for the gravity sewer and the force main shall be submitted concurrent with the lift station plans. Plans shall be prepared by a professional engineer with experience in lift station design, as further discussed in these Standards.

Design material and drawings shall provide all civil, mechanical and electrical details and shall be consistent with all applicable codes and regulations, and good engineering practice. Drawings shall be prepared in accordance with the City's General Drafting Standards and shall show, at a minimum:

- Locations of proposed and existing streets, rights-of-way, sewers and other utilities in the vicinity of the proposed lift station.

- All known existing structures, both above and below ground, that might interfere with the proposed construction, particularly buildings, water mains, gas mains, storm drains, overhead and underground power lines, telephones lines, and television cables.

- Site layout for the lift station installation at a minimum scale of 1"=10', clearly showing the level of detail required in these standards. The site layout shall show the locations in plan view of all existing and proposed structures, piping, utilities, equipment, easements, property boundaries, slabs, exterior lighting, fencing, access driveway(s), landscaping, drainage and surface restoration. Piping shall be labeled as to type, material and size, and with all special fittings and connections identified. Routing of buried electrical conduits shall be provided on the site layout or on a separate electrical layout and shall identify conduit size and material type, stub up locations, and the number, size, type and general termination location of all conductors. Where the site layout is too crowded to clearly indicate the information required at the minimum scale, the scale shall be enlarged and/or detail views furnished.

  Relative locations of structures and equipment shall be identified and dimensioned on the site layout or associated details, based on preliminary equipment sizing if necessary, and shall specifically allow for adequate clearances for opening of doors, lids and hatches; clearance for code requirements (e.g., Labor and Industries, International Building Code), and reasonable access for repairs and maintenance. Where exact equipment dimensions are not known at the time of design, or where the dimensions are subsequently revised from those assumed during design, the Developer's engineer shall provide a scaled, dimensioned drawing of the lift station layout after submittals have been approved, for City review and approval.

- Mechanical plans for the location and orientation of all mechanical equipment and all connections. Mechanical plans shall include plan and section views of the wet well, valve vault and emergency bypass valve vault, scaled and dimensioned, together with appropriate details, to show: size, number, type, location, elevation, orientation, connection and bracing of the suction piping, discharge piping, bubbler tubing, float switches, drains and vents; pump (level) control elevations; hatch type and location; ladder type and location; and grout. Mechanical plans shall also include any required facilities for odor and surge mitigation.

- Structural plans or details for the required overhead shelter(s), housekeeping pads, equipment pads and any proposed retaining walls.

- Site grading plan and a minimum of two representative cross sections through the lift station site showing site grading and significant buried and above grade structures.

- Electrical plans and details to include: location of all control, instrument and distribution system equipment and components; electrical schematic for 3-phase power modified to show number, type and size of conduits and conductors; telemetry/SCADA block diagram showing number, type and size of conduits and conductors; elementary, connection, and interconnection wiring diagrams for electrical controls; electrical rack layout; telemetry panel layout; routing in plan view of all buried electrical conduits; and all equipment and installation detail.

Any specifications created for use by the installing contractor shall be provided to the City for review and approval at the time that plans are submitted.

All plan sheets shall be stamped by a professional engineer registered in Washington State. The engineer's stamp provided on the electrical and structural plan sheets shall be that of a registered electrical engineer and structural engineer, respectively.

E. Site Plan

As part of the plan set, the Developer shall furnish a site layout for the lift station installation. The site plan shall clearly show the existing and proposed facilities as specified herein.

The lift station shall be located as far as practicable from existing or proposed built-up residential areas, and an asphalt concrete access driveway shall be provided. Sites for sewage lift stations shall be of sufficient size for future expansion or addition, if applicable.

The lift station site shall meet the following standards:

1. Level yard area, 30 feet x 50 feet minimum exclusive of driveway, off street parking, landscaping, and required buffers. The long axis shall be aligned with the access driveway. Maximum yard area slope shall be 3 percent.

2. Access via dedicated right-of-way or perpetual easement. Access points shall be constructed in accordance with City, County or State standards, as applicable, including driveway slope and site distance.

3. Driveway width 12-foot minimum and with sufficient length to allow one service vehicle to pull off the street to open the vehicle access gate. Driveway length shall not exceed 50 feet except as approved with conditions by the City's Engineer.

4. Off street parking for a minimum of one 1-ton service vehicle, without impacting vactor access, and in accordance with City and County requirements. The site shall be configured to allow a 1-ton service vehicle to turn around off the street.

5. Vactor access to the wet well, head-in, subject to the following grade limits:

| | | |
|---|---|---|
| 1. | Maximum longitudinal slope: | 5% |
| | Maximum side slope: | 3% |
| 2. | Max. combined longitudinal and side slope | 5% |
| 3. | Maximum reach from truck to wet well: | 5 feet |

The easement for the lift station site shall be submitted to the City for review prior to construction of the lift station. Lift station sites not located within the plat boundary shall be deeded to the City. At a minimum, the site layout shall provide for the following:

1. Lift station, including wet wells, and upstream onsite manhole.

2. Effluent valve vault, flow meter vault with bypass, and emergency bypass pump connection.

3. Auxiliary power (standby engine generator and fuel supply), including automatic transfer switch

4. Electrical service and distribution.

5. Programmable Logic Controller (PLC) based control system that will integrate with the existing or a planned PLC at the wastewater treatment facility. The PLC will control pump operation in a lead/lag configuration via the 4-20mA output signal that represents the wet well level from the pressure transducer and float switches.

6. Telemetry/SCADA.

7. Water service.

8. Odor control, as determined by the City's Engineer.

9. Surge control as required by the surge analysis.

10. Cuts and fills to provide level site for maintenance.

11. Asphalt or Portland cement concrete pavement for access and maintenance areas.

12. Six-foot-high chain link fence enclosing the site, with pedestrian and equipment access gates.

13. Overhead weather protection for all electrical panels normally accessed by City personnel for system maintenance and operation.

14. Area lighting as required by the City.

15. Site drainage in accordance with City or County standards.

16. Adequate clearances between equipment items and other facilities as required by all applicable codes, and as necessary for reasonable access for maintenance and repair, including access through all doors, hatches and lids.

17. Separation from easements for stormwater detention facilities and other major utility structures.

F. General Requirements

1. Prior to construction, the design report and lift station plans shall be reviewed and approved in accordance with City standards and Department of Ecology design guidelines by the City's Engineer.

2. Prior to construction, the Contractor shall request and attend a preconstruction meeting with the City and the City's Engineer.

3. Work shall be performed only by contractors experienced in the installation of mechanical, electrical and sewer facilities and on the City's list of approved contractors. All work shall be performed by or under the supervision of a qualified licensed and bonded general contractor.

4. Prior to any work being performed, the Contractor shall contact the City's Engineer to set forth his proposed schedule.

5. The Contractor shall attend regular meetings with the City and the City's Engineer, on a weekly, biweekly or monthly basis at the City's option, to coordinate technical and administrative aspects of the project.

6. The Contractor shall obtain approval of materials to be used from the City's Engineer prior to ordering of materials. Product submittals shall include manufacturer's literature (marked to designate included options and features and to exclude all extraneous information), shop drawings and diagrams (scaled and dimensioned where appropriate), color and material samples, design calculations (where required in addition the design report), and test reports.

7. Lift stations shall be constructed only in easements that have been granted to the City or in property that has been deeded to the City, as clarified elsewhere in these standards. Sewers may be laid within a plat or property identified in the developer extension agreement, subject to dedication of appropriate rights-of-way and recording of appropriate easements at the time the plat and/or warranty bill of sale is filed with the County Auditor.

8. Construction of sewer pipes and buried facilities associated with lift station construction shall be in accordance with these standards.

9. Sewage control valves shall be resilient seat gate valves, AWWA C 515 ductile iron body with epoxy lining, M&H, Mueller or equal.

10. Sewage control valves shall be installed in vaults (or manholes); direct burial of valves is not permitted. Sewer piping within valve vaults shall be ductile iron piping. Each valve vault and the flow meter vault shall be equipped with steps or ladder, H-20 load rated hatch, and a drain (2-inch minimum PVC drain to the wet well with duckbill check valve). Vaults shall provide adequate access for equipment maintenance and removal.

11. The flow meter shall be in a vault. Bypass piping shall be constructed with appropriate valving, to allow for removal of the flow meter.

12. All metal fabrication shall be subject to City review and approval with respect to materials, fabrication method, coating, installation and testing. Provide shop drawings for review. Structural components (other than fasteners) subject to emersion, intermittent emersion, or corrosive environments shall be 316 stainless steel or 6061-T6 aluminum alloy. Where structural steel (ferrous metal) is exposed to weather, it shall be zinc coated or galvanized by the "hot-dip" method in accordance with ASTM A123. Fasteners subject to submersion, intermittent submersion, splash or corrosive environments, or for use with aluminum items, shall be 316 stainless steel. Ferrous metal fasteners shall be zinc coated or galvanized. Concrete anchor bolts shall be stainless steel, and where subject to submersion, intermittent submersion, or corrosive environments shall be adhesive type set in epoxy.

13. Portland cement concrete for use in construction of reinforced concrete pads and foundations shall contain 6 sacks of ASTM C150 Type II cement per cubic yard of concrete, shall contain an approved air-entraining admixture, shall contain no chloride admixtures and shall have a minimum 28-day compressive strength of 3,500 psi. Provide a concrete mix design for City review and approval. Reinforcing steel shall consist of deformed bars or welded wire fabric as shown on the approved plans. Curing compound shall be liquid type membrane conforming to ASTM C309, Type I, Class A and B.

14. Cement grout for ballast and fillets shall be a sand and Portland cement mix only, shall contain 6.5 sacks of ASTM C150 Type II

cement per cubic yard of grout, and shall have a 28-day compressive strength of 2,500 psi.

15. Non-shrink grout used for pipe sleeves, equipment bases and similar applications shall be Masterflow 928 by Master Builders or equivalent product by W.R. Grace.

16. A single roof structure shall be furnished to provide overhead weather protection for all electrical panels normally accessed by City personnel for system maintenance and operation, including the generator panel, the pump panel and the electrical equipment rack. The roof structure shall extend a minimum of 3 feet horizontally beyond the face of electrical panels, shall allow for equipment removal and replacement, shall allow for vertical vactor access to the wet well trough, and shall include overhead lighting sufficient for operation of all equipment panels and performance of typical maintenance and repair. Structural components shall be steel and shall be hot-dipped galvanized after fabrication. Roofing shall be standing seam metal roofing, 24-gauge minimum, zinc coated to G-90 standard and painted with Kynar 500 paint system or equal, color to be approved by the City. Gutters and downspouts to the drainage system shall be provided. Fasteners shall be stainless steel. Structural plans and details shall be stamped by a structural engineer licensed in the State of Washington.

17. A 6-foot-high galvanized chain link fence shall be provided to enclose the site, with vertical vinyl slats in-laid for screening, three strands of barb wire, a 3-foot pedestrian access gate and a 12-foot (minimum) vehicle access gate. Fence shall be Type 1 Class 1 in accordance with WSDOT Standard Specifications 8-12 and 9-16 and Standard Drawings L-2 and L-3. Landscaping may be incorporated on site for screening in lieu of the vinyl slats, with City approval. Galvanized fencing components may be overcoated with polyester powder coating or thermally fused and bonded vinyl, polyester or polyolefin, subject to review and approval of the coating specification by the City.

18. A 2-inch water service shall be provided, with WSDOH approval reduced pressure backflow preventer, GFCI protected duplex electrical receptacle, and hose bib installed in an above-grade freeze-protected enclosure on a concrete pad. Piping shall be heat traced and insulated. Enclosure shall be Hot Box, or equal. Furnish 50 feet of 1-inch heavy-duty rubber hose.

19. Odor control shall be provided where appropriate, as determined by the City, based on an odor mitigation determination to be performed by the City's Engineer.

20. Surge protection for the force main shall be provided where appropriate, and shall typically be provided where surge pressures are anticipated to exceed 100 psi. Surge pressures shall be evaluated for the condition where there is a sudden loss of power to the maximum number of pumps that will be permitted to operate simultaneously. Transient surge pressures shall not be permitted to exceed the rated working pressure of the force main piping.

21. Wet well, vaults and similar buried structures with piped connections shall constructed on undisturbed subgrade with structural fill, unless otherwise approved with conditions by the City's Engineer. Sewage piping installed between lift station structures shall be ductile iron, constructed in accordance with Section 8 of these standards. Restrained joints shall be installed on all pressure piping, and on all ductile iron sewage pipe and fittings, including gravity sewers and drains.

22. Buried facilities shall not be backfilled until installation and bedding have been inspected by the City.

23. All backfill placed within areas subject to vehicular traffic shall be compacted to 95 percent of modified Proctor maximum dry density per ASTM D1557, or in accordance with Snohomish County, City and/or State requirements, whichever is more stringent. Compaction in other areas shall be to a minimum of 90 percent of modified Proctor maximum dry density or as shown on the plans. Copies of the compaction results shall be provided to the City.

24. Road restoration shall be per, City, Snohomish County and/or State design and construction standards. Developer and Contractor shall become familiar with all City, County, and State conditions of required permits, and shall adhere to all conditions and requirements.

25. Landscaping shall be in accordance with City requirements, where applicable. Where landscaping is required by City or County codes, the landscaping plan shall incorporate the following features to the fullest extent allowed:

    - Drought tolerant native species.

- Fabric weed barrier overlaid with mulch, to minimize weed propagation.

- Dense spreading native groundcovers (e.g., Kinnikinnick).

- Compact tree varieties with minimal pruning requirements, located so as to minimize leaf litter, mold propagation on lift station facilities, and potential damage to lift station facilities resulting from uprooting and limb breakage.

26. Installed conditions shall be field verified after construction by the Developer's engineer and the record drawings revised accordingly. Record drawing information shall be as specified in Section I of these standards. The record drawings shall be signed by a Washington State licensed professional engineer, which shall attest to the fact that the information is in accordance with construction records.

27. Following submittal of the approved maintenance and operations materials and record drawings, the City's Engineer shall, at the Developer's expense, prepare a written narrative description of the basic pump station control strategy, including primary and backup controls, pump protection features, associated alarms and initial wet well level set points.

G. Factory-Built Pump Station

1. General

Sewage pump stations with less than a 20-foot suction lift shall be a Smith & Loveless suction lift pump station. If the depth of the pump station precludes the installation of a suction lift pump station then a submersible pump station with Flygt pumps, as approved by the City, shall be installed. Construction shall be in compliance with O.S.H.A., U.L., A.S.T.M., N.E.C. and other applicable codes and regulations. The station shall be constructed and anchored to comply with current seismic requirements.

The pump station shall be equipped with a minimum of two sewage pumps. Each pump shall have sufficient capacity and capability to efficiently handle the peak design flow and to ensure a minimum velocity of 3 feet per second in the force main. Design calculations and pump curves to verify the choice of pump and impeller shall be

provided with the submittal information. Calculations and curves shall verify that the pumps will operate satisfactorily with all pumps including the redundant pump operating (in the event that wet well levels or flows temporarily exceed the design range).

The sewage pump station shall be installed in accordance with the manufacturer's recommendations. The sewage pump station manufacturer shall inspect the station during installation. Written confirmation of each visit and recommendations shall be provided to the City.

All pumps shall be factory tested following pump station assembly to ensure that vibration is within the current Hydraulic Institute Standards. Rotating assemblies shall be spin balanced by the pump station manufacturer prior to vibration testing. Factory test results shall be provided to the City prior to station delivery. Following installation of the pump station at the site and prior to startup, the pumps shall be retested for vibration by the pump station manufacturer. Copies of all test results shall be included in the maintenance and operation information.

The sewage pump station manufacturer shall provide training for City personnel at the station site, as described elsewhere in this section.

The sewage pump station manufacturer shall provide three complete copies of maintenance and operation material to the City as described elsewhere in this specification. Maintenance and operation material shall include a complete discussion of pump control strategy in narrative form, including operational troubleshooting procedures, startup and reset procedures, and calibration, setting and testing of level set points, gauges and alarms.

2. Suction Lift (Wet Well Mounted) Station

The station shall be Smith & Loveless suction lift (vacuum prime) station complying with the latest edition of Smith & Loveless standard specifications and with the City Standards. The station shall be installed in accordance with the manufacturer's recommendations and as further described herein.

As a minimum, the station shall include the following:

- Vertical, close-coupled, motor driven, vacuum-primed, non-clog pumps.
- Pumps and motors shall be controlled by, and rated for, variable frequency drives.
- Resilient seat gate valves (or plug valves) on each discharge; 3-way valves not permitted.
- A valve vault shall be provided outside of the wet well and shall house all check valves and shut-off valves.
- Pump station control panel with PLC, pump backup control circuits, and breakers, vacuum pump controls, sewage pump protection controls, and other controls and alarms (as described below) for mounting external to the pump station.
- Pump/motor enclosure with HVAC.
- Priming pumps and appurtenances; discharge exhaust to wet well.
- All internal wiring, with welded nipple connections through the enclosure base coaming for rigid conduit entry.
- Discharge pipe welded to the base plate; all base plate penetrations within lid enclosure gas tight to permit area above wet well to be unclassified (not classified as Division 1 or Division 2 per NEC).
- Concrete trench with grating top (H20 loading) and quick disconnect plugs.
- Lid to be insulated, 2 piece design or 1 piece design with spring or hydraulic lid lift assist.
- Paint station with S&L standard mint green epoxy.
- Programmable Logic Controller (PLC) based control system that will integrate with the current or a planned PLC at the wastewater treatment facility. The PLC will control pump

operation in a lead/lag configuration via the 4-20mA output signals that represents wet well level from a pressure transducer.

- The transducer's output signal will be series loop connected with a setpoint controller (Red Lion PAXP with 4-20 mA input and 4-relay output card) that in conjunction with an alternating relay will serve as backup pump control.

- High water alarm contacts from two high level float switches, to also activate redundant PUMP NO. 1 call and redundant PUMP NO. 2 call that is directly powered/connected to the pump starter's control circuit. When the float is tripped its associated pump will start and after the float has reset the pump will continue to run for an adjustable time via a timing relay.

- Shelf mounted vacuum prime pumps to be mounted at or above the top of the base enclosure coaming. Valving shall permit either priming pump to be removed without disabling the other.

- Station access limit switch to signal intrusion and operator access.

- Intrusion limit switch and alarm contact, with keyed deactivation/activation on time delay.

- Full body, lever and spring swing check valve on each pump discharge, mounted in the horizontal position, furnished with standard factory applied epoxy lining.

- Check valve limit switch and alarm contact to indicate low flow with time delay, for each pump.

- Smoke detector and alarm contact.

- Extended warranty – 24 months from startup or 30 months from time of shipment whichever is first.

- Documentation as required to verify that the pump station is in compliance with the N.E.C. and Washington State Department of Labor and Industries requirements.

- NEMA 3R GFCI protected duplex receptacle.
- Two 1-inch conduit connections in control panel for connection to the telemetry panel.
- Spare parts, labeled with part numbers.
- Replacement pump shaft seal assembly, including a full set of gaskets and o-rings (1 each per pump).
- Pump volute gaskets (2 each per pump).
- Pump base seal gaskets (1 each per pump).
- Plexiglass electrode bowl (1 each per pump).
- Solenoid valve for vacuum system (1 each per pump).
- Vacuum prime flex tubing (10 feet per pump).
- Vacuum pump for priming system (1 each per station).
- Ultrasonic prime level sensing kit with relay (1 each per station).
- Wafer check valve (1 each per pump).
- Touch up paint kit.
- 1/2-inch NPT gauge connection on the discharge header, equipped with pressure gauge (Ashcroft Model 45-1279), roddable diaphragm seal (Red Valve Series 42), two isolation ball valves (one each side of diaphragm seal).

H. Submersible Pump Station

The City standard for submersible pump station shall include Flygt submersible pumps.

Submersible sewage pump stations shall meet all of the requirements where applicable for suction lift pump stations except as follows:

- The pump and motor shall be designed and built to operate continuously while the motor casing is fully exposed above the sewage level.

- Pumps shall be mounted on stainless steel guide rails with a quick connect discharge connection.

- The pump shall be easily removable for inspection or service, requiring no bolts, nuts, or other fastening to be disconnected for personnel to enter wet well.

- Each pump shall have both thermal and moisture sensors with automatic alarms.

- Each pump shall be fitted with a stainless steel pump lifting chain.

- An access hatch shall be placed directly over each pump for pump liftout.

- An access hatch shall be located directly over the wet well ladder.

- The pump power cables and control cables shall terminate in the control panel with a quick disconnect plug.

- Each transducer's output signal will be series loop connected with a setpoint controller (Red Lion PAXP with 4-20 mA input and 4-relay output card) that in conjunction with an alternating relay will serve as backup pump control.

    - High water alarm contacts from two high level float switches, to also activate redundant PUMP NO. 1 call and redundant PUMP NO. 2 call that is directly powered/connected to the pump starter's control circuit. When the float is tripped its associated pump will start and after the float has reset the pump will continue to run for an adjustable time via a timing relay.

- A stainless steel davit crane with stainless steel cable and lined hoist socket shall be provided with each pump station.

- Pumps shall be heavy duty submersible non-clog centrifugal and designed specifically for municipal unscreened raw sewage application, Hidrostal or equal.

- Submersible pumps shall be readily removable and replaceable without dewatering the wet well or requiring personnel to enter the wet well. Continuity of operation and other units should be maintained. A hoist and grip-eye pump removal system and accessories for removing the pumps from the wet well shall be provided.

I. Motors

The pump and motor shafts shall be the maximum diameter available for these units.

Pump motors shall be 3-phase, 60-cycle, 480-Volt. Motors larger than 25 hp, or where required by the City, shall be furnished with soft starts, or variable frequency drives equipped with start rated bypass contactors. Where motors are used with VFDs, the motors shall be invertor duty rated and shall meet the applicable requirements of NEMA MG1.

The motors shall have 1.15 service factor and be non-overloading for the full range of the curve unless otherwise approved by the City.

J. Wet Well

1. General

The wet well shall be precast concrete manhole sections and shall conform to manhole specifications in these Standards, as modified herein. Joints between precast wall sections shall be confined O-ring or as otherwise approved.

The wet well shall be checked to ensure all joints are watertight to prevent infiltration and exfiltration of the wet well.

Float switches and pressure transducers shall be located so as to avoid interference by inlet flows, bracing, brackets, and other protrusions. Float switches and pressure transducers shall be tethered to a stainless steel cable or chain that is anchored by a weight where necessary to avoid entanglement with wet well piping and support brackets or installed in a stilling well. The location and method of attachment of the float switches, pressure transducers, and cables shall be detailed on the plans.

Mitigation of wet well odors shall be provided as recommended in the odor evaluation and as required by City or County code.

A resilient seat gate valve in an influent valve manhole shall be provided on all influent lines to the wet well, as described elsewhere in these standards.

The wet well vertical walls, and the underside of the lid and all ductile iron surfaces shall be coated, following installation and grouting of the pipe penetrations, to comply with the following:

a. **Surface Preparation:** Allow 28 days cure time for concrete, or until passing the ASTM D4263 Plastic Mat Test (may be shorter for various grout mixes). SSPC SP-13 Abrasive Blast to provide a surface profile on all concrete surfaces and SSPC SP10 Near White Blast on all metal surfaces to be coated. Surfaces shall be clean, dry and free of contaminants.

b. **Surface Filler:** Tnemec Series 218 Mortar Clad. Apply multiple coats to the concrete surfaces as needed to fill bug holes and surface voids and to provide a primed surface that is monolithic, continuous and pinhole free.

c. **Primer:** Tnemec Series 435 Perma Glaze. Apply at 20.0 to 25.0 mils dry film thickness.

d. **Finish:** Tnemec Series 435 Perma Glaze. Apply at 20.0 to 25.0 mils dry film thickness.

e. **Application:** Comply with paint manufacturer's recommendations, including recommended recoat intervals.

2. Wet Well Mounted Station

The wet well shall be a minimum of 6 feet in diameter. Suction piping shall be Schedule 80 PVC and shall be braced at a point above the maximum liquid elevation to prevent damage during vactor operations, while allowing the piping to be rotated to access the check valves in the wet well mounted pumping station. Suction piping attachment and bracing shall be detailed on the plans. A cast-in-place reinforced concrete slab (12' x 16' minimum) shall be provided over the wet well as a housekeeping pad and mounting

surface for the factory-built pump station. Provide a 4-inch vent that is "hooked and screened."

3. Submersible Pump Station

The wet well shall be a minimum of 6 feet in diameter. The wet well shall provide for the volute of the pumps to be fully submerged at all times. The highest float switch (PUMP 2 ON/HIGH ALARM) shall be set a minimum of 6 inches below the invert of the lowest gravity sewer inlet pipe, or at an elevation as may be set by the City.

The flat slab concrete cover shall be provided with a 4-inch minimum vent that is "hooked and screened." A separate manhole cover shall be cast into the cover for vertical access to the wet well by a vactor unit. A separate aluminum access hatch cast into the cover shall be mounted above the pumps to allow pump retrieval.

K. Controls

1. Factory-Built Pump Station

The control panel for the package pump station shall include:

- Distribution circuit breakers for protection of branch circuits derived in the control panel.
- City Panel mounted running light for each pump.
- Panel mounted overtemp light for each pump.
- Panel mounted prime fail light for each pump.
- Panel mounted ammeter for each pump to read percentage of full load (or amperes).
- Panel mounted running time meter for each pump (Cramer or Grasslin).
- Panel mounted HOA (Hand-Off-Auto for above grade stations) or LOR (Local-Off-Remote for buried stations) switches for each pump.

- Spare contact on HOA switches to remotely indicate when the switch is in AUTO position.

- Terminals for connection of remote start contact for each pump with selector switch in AUTO position.

- HOA switches to be without spring return in hand mode.

- Above listed electrical components shall be Allen-Bradley, Cutler Hammer, General Electric, or Square D Company, unless otherwise noted.

- Panel mounted digital level displays connected in the loop outputs for each of the two pressure transmitters.

- Panel mounted pressure transmitter “active” (green) and “available” (yellow) lights, one set for each pressure transmitter.

- Control relays as required for pump starting, pump protection, and alarming functions.

- Flow rate, both instantaneous and total.

2. General

Control and instrument system plans shall thoroughly and completely depict system design. The plans, in conjunction with the specifications, shall define the type of control system, the type of components in the system, the set points and the interface between the instrumentation and control system and the mechanical components. To accomplish this, the control and instrument plan(s) shall include, as a minimum, the following:

a. Control and instrumentation system legend and general notes.

b. Control, instrumentation and distribution diagram.

c. Plans showing location of all control, instrument, and distribution system equipment and components, both electrical and pneumatic.

d. All equipment and installation details.

The power, control and instrumentation systems shall be designed with both operational reliability and maintainability. Use standard products wherever possible.

All components within the pump station system, including both internally and face-mounted instruments and devices, shall be clearly identified with phenolic nameplates with white letters on black background.

All wiring between cabinet, equipment and components shall be marked/numbered and multiple color coded where applicable.

All conduits shall be tagged at each end.

Pumps shall normally be operated on a lead/lag basis based on wet well level as determined by duel pressure transmitters. The pressure transducer's output signal will be series loop connected with the PLC and a setpoint controller (Red Lion PAXP with 4-20 mA input and 4-relay output card) each producing a 4 to 20 mA signal proportional to the wet well level. The SCADA PLC (provided separately from the Smith and Loveless pump station control panel) shall be programmed to generate pump calls via relay contact outputs which will be connected to the pump station control panel, as well as high and low wet well level alarms, based on the average 4 to 20 mA signals generated by the pressure transducer. The PLC program shall have the capability to determine whether a specific transducers output is out of range and to ignore that output from that transmitter and to issue a transmitter failure alarm. The PLC program will generate a pressure transducer out of calibration alarm if the two signals differ be 4 or more inches

The wet well level as determined by each transducer shall also be displayed on the pump control panel door, with one display for each transducer. A three-position selector switch on the telemetry panel and connected to the SCADA PLC shall allow the operator to select the output from Transmitter 1, Transmitter 2, or both for use in the PLC control of the pumps. A green panel mounted "active" pilot light on the pump control panel, adjacent to each transmitter level display, and connected to an output of the PLC shall indicate when the associated output is selected for input to the PLC. A yellow panel mounted "available" pilot light on the control panel, adjacent to each transmitter level display, and connected to an output of the PLC shall indicate when the associated output is

within range, as determined by the control program in the SCADA PLC.

Float controls shall also be provided to operate independently and in parallel with the PLC and backup controls and shall be known as Mode 3 control. Floats shall be connected to the pump control panel via Intrinsically Safe Relays mounted in the control panel, with each float starting a pump directly and independently of the PLC and backup controls and after the float has reset the pump will continue to run for an adjustable time via a timing relay.

The wet well control elevations shall be indicated on the plans, i.e., for duplex station: HIGH LEVEL ALARM/LAG PUMP ON (float switch), HIGH LEVEL ALARM/LEAD PUMP ON (float switch), HIGH LEVEL ALARM (pressure transducer), LAG PUMP ON (pressure transducer), LEAD PUMP ON (pressure transducer), LAG PUMP OFF (pressure transducer), LEAD PUMP OFF (pressure transducer), and LOW LEVEL ALARM (pressure transducer).

The intrusion/operator access limit switch shall be connected to the pump control panel and used to monitor intrusion into the control panel in conjunction with a key operated deactivation/activation switch located on the panel door and a time delay relay that delays the alarm signal for an adjustable interval on deactivation. Reactivation shall not occur until the limit switch is reset.

Buried stations shall have an HOA (Hand-Off-Auto) switch at each pump and a LOR (Local-Off-Remote) switch at the factory control panel. Above grade stations shall have only the HOA switch located at the factory control panel. Each HOA switch shall have an “AUTO” contact to signal that the pump is in “AUTO” mode. For buried station, an output of the PLC shall generate an alarm if either pump is left not in Auto when the operator has left the station. The signal shall be displayed by a local flashing beacon light on the top of the telemetry panel, with dry contacts for SCADA system use. The beacon shall be equipped with a bypass toggle switch located in the panel interior.

The single-phase transformer for the lift station shall be as required for proper operation of the single-phase side system.

The pump station electrical circuit shall be designed for generator starting and signals to the SCADA system as required.

A complete set of spare fuses shall be provided for all fused equipment.

## LIST OF DRY CONTACT OUTPUTS FROM CONTROL PANEL TO SCADA SYSTEM, AND CONTROL SYSTEM RESET REQUIREMENTS

| **Alarm/Status Outputs** | **Reset** |
|---|---|
| Pump 1 Run | N/A |
| Pump 2 Run | N/A |
| Pump 1 Pump–In–Auto | N/A |
| Pump 2 Pump–In–Auto | N/A |
| Pump 1 Fail | Auto |
| **Alarm/Status Outputs** | **Reset** |
| Pump 2 Fail | Auto |
| Pump 1 Prime Failure | Auto |
| Pump 2 Prime Failure | Auto |
| Intrusion Alarm | Auto |
| Wet Well High Level Alarm (Lead and Lag Pump Floats) | Auto |
| Station on Backup Control | Auto |
| Pumps Off (Float) | Auto |
| Low Voltage, Phase Loss, Phase Reversal | Auto |
| Control Power Failure | Auto |
| Smoke Detector | Auto |
| Station Flooding (buried station only) | Auto |
| Ventilation Fail (buried station only) | Auto w/Delay |
| Operator in Trouble | Manual |

Two independent sets of contacts shall be provided for each alarm/status condition. One set will be used with the PLC and one set will be used with the annunciator or dialer. The pump fail alarm for each pump shall be activated upon check valve limit switch fail to open (timed delay at pump start).

## LIST OF ANALOG OUTPUTS FROM CONTROL PANEL TO SCADA SYSTEM

| |
|---|
| Wet Well Level Transmitter 1 (analog) |
| Wet Well Level Transmitter 2 (analog) |
| Flow Rate |

**LIST OF DISCRETE INPUTS FROM SCADA SYSTEM TO CONTROL PANEL**

| |
|---|
| Call Pump No. 1 |
| Call Pump No.2 |
| Pump No.1 Overtemp |
| Pump No. 2 Overtemp |
| Transducer No. 1 Active |
| Transducer No. 2 Active |
| Transducer No. 1 Available |
| Transducer No. 2 Available |

L. Electrical Service and Distribution/Telemetry System and Controls

1. General

Codes and regulations exist at the federal, state, and local level dictating minimum acceptable requirements for electrical systems. The following standards shall be used as a basis for design and review.

- National Electric Code (NEC)
- Occupational Safety & Health Act (OSHA)
- State & Local Building Codes
- National Electrical Code (NESC)
- National Electrical Manufacturers Association (NEMA)
- Underwriters' Laboratory (UL)
- Insulated Power Conductor Engineering Association (IPCEA)
- American National Standards Institute (ANSI)
- Institute of Electrical & Electronic Engineers (IEEE)
- National Fire Protection Association (NFPA)

2. Electrical Service and Distribution

The local electric utility will be the primary source of electrical power. The Developer shall ascertain proper coordination between the nominal secondary delivery voltage supplied by Snohomish County P.U.D. No. 1 and the connection to the lift station equipment. The electrical service shall be 480-volt, 4-wire, 3-phase, 60 hertz, with a solid neutral terminal at the disconnect or as may otherwise be required by Snohomish County P.U.D. No. 1. This shall be confirmed with the Snohomish County P.U.D. No. 1

and confirmed by the suppliers. Underground service shall be provided unless otherwise approved by the City.

All installation shall be approved by Snohomish County P.U.D. No. 1 and shall be in conformance with the N.E.C. (current issue), U.L., O.S.H.A. and County and State electrical codes. Particular attention is directed to the fact that the State of Washington requires that electrical equipment and electrically powered equipment be listed or labeled by a testing laboratory (U/L or other Nationally Recognized Testing Laboratory) acceptable to the Washington State Department of Labor and Industries.

The City shall be furnished with a certificate of final inspection by the inspecting agency.

All wire shall be stranded copper.

All exposed conduit shall be rigid galvanized. All underground conduits shall be PVC with rigid galvanized PVC-coated elbows and rigid galvanized PVC coated transitions to exposed conduit.

All underground conduits shall be marked with polyethylene tape placed 6-inches below finished grade and directly above the conduit.

All conduits shall have a minimum of 24 inches of cover.

All conduit shall be tagged at each end.

Heating strips with thermostats shall be provided for outside electrical enclosures with temperature sensitive devices.

Service voltage shall be 277/480 volts, 3 phase, 4-wire, except as required by Snohomish P.U.D. #1. Single-phase services shall be 240/120 volt, 3 wire, if approved by the City, where 480-volt 3-phase is not available.

A service entrance shall be provided with a rack or pedestal on which shall be mounted, as a minimum, the following equipment:

a. Meter and meter can (as required by the P.U.D.)

b. Metering current transformers and enclosure (as required by the P.U.D.)

c. Main disconnect circuit breaker in a NEMA 3R, enclosure, with padlock to City standards

d. Automatic transfer switch in a NEMA 3R enclosure

e. A 480-volt distribution panelboard with circuit breakers for each pump starter, one for a 480-240/120V stepdown transformer, and (as required) for other 480-volt loads.

f. A 10 or 15 KVA single phase transformer.

g. A 24 (or more) circuit panelboard in NEMA 3R enclosure with main circuit breaker and branch circuit breakers for receptacle outlets, engine generator (battery charger, block heater, control panel and other generator heaters or equipment), hot box, site or area lighting, telemetry panel, pump control panel, other loads (as required) and three spares (1-Pole 20A).

h. A 120-volt duplex receptacle outlet in NEMA 3R enclosure with padlock to City standards.

i. Ground rod(s) and connector wire in conduit to N.E.C. standards.

j. Pump control panel in a NEMA 3R enclosure with locking 3-point latch with Ethernet capable PLC, operator interface (18-bit color, touch screen, 640 x 480 resolution minimum) and SCADA modem. Also, setpoint controllers, power distribution, Ethernet switch, 24 VDC power supply control relays, and terminal strips. Door mounted devices shall be mounted on an interior door. “Operator-In-Trouble” mushroom head maintained contact (detented) pushbutton on exterior bottom of panel.

k. Telephone service from serving telecom utility to telemetry panel including Line Protection Unit (LPU) or Building Entrance Protector (BEP) and Network Interface Unit (NIU).

l. Mount equipment per Standard Details

m. Provide spare conduits as determined by the City’s engineer

Provide electrical single-line diagram as part of the design showing all components and control between pedestal, lift station and generator with wire and conduit sizes.

The City shall be provided with a complete reproducible set of as-constructed plans and details showing final location of all equipment, conduit and wire.

3. Telemetry (SCADA System) and Controls

The telemetry system shall integrate with the existing or planned PLCs and telephone modems at the wastewater collection system. A control/telemetry panel for the SCADA system is to be included with each lift station. Developer shall pay for installation of a telephone line to the station.

For each new lift station the Developer shall provide a control/telemetry panel including a SCADA PLC, operator interface (18-bit color, touch screen, 640 x 480 resolution minimum), modem, power supply, heater, surge protection devices for power, setpoint controllers, relays, and all other auxiliary devices as required for proper operation of the system. Inputs and outputs shall be connected to a terminal strip in the control/telemetry panel.

The SCADA PLC shall be programmed to generate pump calls and well level alarms via interposing relay contact outputs to the pump station control panel, based on the average 4 to 20 mA signals generated by the pressure transmitters. The PLC program shall have the capability to determine whether a specific transmitter output is out of range and to ignore the output from that transmitter and to issue a transmitter failure alarm The PLC program will generate a pressure transducer out of calibration alarm if the two signals differ be 4 or more inches.

Typical discrete inputs to the PLC include:

**From Control/Telemetry Panel**

- Level Transmitter 1 Selected
- Level Transmitter 2 Selected
- Use Average Selected

**From Transfer Switch**

- Commercial Power Fail
- Generator Power Fail
- Connected to Commercial Power
- Connected to Generator Power
- Commercial Source Available
- Standby Source Available
- Transfer Switch Not In Auto
- From Generator Control Panel
- Generator Run
- Generator Fail
- Generator Low Fuel
- Generator Fuel Tank Leak
- Generator Low Battery Voltage
- Generator Not In Auto
- From Pump Station Control Panel
- Pump No. 1 Run
- Pump No. 2 Run
- Pump No. 1 HOA Status (Hand/Auto)
- Pump No. 2 HOA Status (Hand/Auto)
- Pump No. 1 Fail
- Pump No. 2 Fail
- Pump No. 1 Overload
- Pump No. 2 Overload
- Pump No. 1 Over Temperature (VFD only)
- Pump No. 2 Over Temperature (VFD only)
- Pump No. 1 Fault (VFD only)
- Pump No. 2 Fault (VFD only)
- Intrusion Alarm
- Wet Well High Level (lag pump float switch)
- Wet Well High Level (lead pump float switch)
- 3 Phase Voltage Fail (from control panel phase monitor)
- Control Power Fail
- Smoke
- Station Flood (Buried Station)
- Ventilation Fail (Buried Station)
- Operator in Trouble

Typical discrete outputs from the PLC include:

- Start Pump 1 (via an interposing relay driven by the PLC)
- Start Pump 2 (via an interposing relay driven by the PLC)
- Transmitter No.1 Active (via an interposing relay driven by the PLC)
- Transmitter No. 2 Active (via an interposing relay driven by the PLC)
- Transmitter No. 1 Available (via an interposing relay driven by the PLC)
- Transmitter No. 2 Available (via an interposing relay driven by the PLC)
    - Transmitter 1 Fail (via an interposing relay driven by the PLC)
    - Transmitter 2 Fail (via an interposing relay driven by the PLC)
    - Transmitters Out Of Calibration (via an interposing relay driven by the PLC)
    - High Wet Well Level Alarm (via an interposing relay driven by the PLC)
    - Low Wet Well Level Alarm (via an interposing relay driven by the PLC)

Typical analog inputs to the PLC include:

- Wet Well Level Transmitter No.1
- Wet Well Level Transmitter No.2
- Pump No. 1 Amperes
- Pump No. 2 Amperes
- Pump No. 1 Speed (VFD only)
- Pump No. 2 Speed (VFD only)
- Pump No. 1 At Full Speed (SS only)
- Pump No. 2 At Full Speed (SS only)

Typical analog outputs from the PLC include:

- Pump No. 1 Speed Set Point (VFD only)
- Pump No. 2 Speed Set Point (VFD only)

Provisions shall also be made for additional I/O signals by providing 20 percent spare terminals within the telemetry panel.

The Developer shall be responsible for furnishing, installing, and starting up the control/telemetry panel for the new lift station. The Developer shall be responsible for the programming of the SCADA PLC at the lift station and the HMI at the City's WWTP. The Developer shall coordinate furnishing, installing and startup with the City to ensure that the station is properly configured and functions correctly in conjunction with the City's existing SCADA system.

The Developer shall coordinate with the telephone utility and the City for obtaining proper telephone service to the site the service shall be underground unless otherwise approved by the City. A line (surge) protector unit shall be provided for each telephone line. The unit shall protect against transient and electrical surges on the telephone line. Protection shall include line fuses and clamps for voltages over 25 volts. Gas tubes shall be provided as an integral part of the lightning protection unit.

All major components, including relays, terminals, and power supplies shall be identified using phenolic or vilam engraved labels.

M. Auxiliary (standby) power system

1. General

Standby power generation equipment shall be provided at the lift station site that will operate the lift station in the event of a commercial power outage.

It is essential that the standby system be designed with capacity and rating to carry safely the entire connected lift station load, including all pumps and ancillary loads unless otherwise approved by the City.

The standby power unit shall be complete in every respect and shall include, but not be limited to, the following:

a. Generator, control panel, main circuit breaker and load bank circuit breaker.

b. Engine, radiator and exhaust system.

c. Fuel tank.

d. Generator set enclosure, lockable, and sound attenuating.

e. Automatic transfer switch.

f. Block Heater.

g. Battery and rack.

h. Battery charger (located in transfer switch).

i. Conduit, wire and piping.

The generator set shall be diesel fueled, or spark-ignited liquid propane fueled if approved by the City, 60 Hertz, 1800 rpm, 3-phase, 277/480 volt standby power.

The generator set shall include the following:

**Engine**

- Single phase, 1,500-watt coolant heater (115 Vac)

**Generator Set**

- Main circuit breaker
- Load bank circuit breaker (identical to main circuit breaker)
- Weather-protective enclosure with mounted silencer (meet EDNA Criteria from Granite Falls Municipal Code 9.58.060).
- 5-year basic standby-power warranty

**Accessories**

- Batteries
- Battery Charger (located in transfer switch)
- Vibration Isolators, Pad Type

**Control Panel**

- Annunciator relays (12)
- Run relay package (3)
- Low coolant level shutdown
- Anti-condensation space heater, 120 Vac

- Oil temperature gauge
- Wattmeter
- Emergency stop switch

**Fuel Systems**

- Diesel. All fuel piping shall be black iron, except for flexible vibration isolation connections at pipe ends. Diesel tank shall be a dual-wall subbase tank with leak detection.
- Capacity for 24 hours operation plus 25 percent, at rated lift station capacity and full auxiliary load.

**Alternator**

- Anti-condensation heater, 120 Vac powered

**Exhaust System**

- Exhaust silencer (meet EDNA criteria from Granite Falls Municipal Coded Section 9.58.60)

**Control Features**

- Run-stop-remote switch
- Remote starting, 12 or 24-volt, 2 wire
- Coolant temperature gauge
- Field circuit breaker
- DC voltmeter
- Running time meter
- Lamp test switch
- Oil pressure gauge
- Fault reset switch
- Cycle cranking
- 12-light engine monitor with individual 1/2-amp relay signals and a separate status or alarm contact for each of the following conditions:

    - Run (Green Light)
    - Pre-Warning For Low Oil Pressure (Yellow Light)
    - Pre-Warning For High Coolant Temp (Yellow Light)
    - Low Oil Pressure Shutdown (Red Light)
    - High Coolant Temperature Shutdown (Red Light)

- Overcrank Shutdown (Red Light)
- Overspeed Shutdown (Red Light)
- Switch Off (Flashing Red Light- Indicates Generator Set Not In Automatic Start Mode)
- Low Coolant Temperature (Yellow Light)
- Low Fuel (Yellow Light)
- Fuel Leak (Red Light)
- Two Customer Selected Faults (Red Light)

**AC Meter Package**

Order with NFPA 110 monitor.

- AC voltmeter (dual range)
- AC ammeter (dual range)
- Voltmeter/ammeter phase selector switch with an off position
- Dual scale frequency meter/tachometer
- AC Rheostat (panel mounted) for + 5 percent voltage adjust

The transfer switch shall include the following:

- Sized for full station and auxiliary equipment load plus 25 percent.
- Delayed transition, including dry contacts for signaling the generator to start on commercial power failure.
- Contacts for signaling commercial power fail, generator power fail, connected to utility power, and connected to generator power.

**Pole Configuration**

- Poles - 3 (Solid Neutral)

**Frequency**

- 60 Hertz

**Application**

- Utility to Genset

**System Options**

- Three phase, 4-wire

**Enclosure**

- Weather-protective enclosure with mounted silencer (meet EDNA criteria from Granite Falls Municipal Coded Section 9.58.60).

**Listing**

- Listing - UL 1008

**Programmed Transition**

- Programmed Transition, 1-60 sec.

**Exerciser Clock**

- 7-day solid-state exerciser clock, programmable as to day and time of day for generator exercising.

**Applications Modules**

- Monitor - Phase Sequence/Balance

Suitable guards shall be provided on all electrical parts to minimize the personal shock hazard.

Generator shall be broken-in sufficiently to permit application of full load immediately upon installation.

Generator supplier shall provide all tools for the generator set as recommended and required by the manufacturer.

Generator installation shall be checked by the supplier after installation to determine that the installation is correct. Written confirmation shall be provided to the City. Generator supplier shall perform a full load test for 2 hours after installation is complete. Provide resistive load bank for this test.

Generator supplier shall provide training for City personnel at the station site, as described elsewhere in this section.

Generator manufacturer shall provide four copies of the maintenance and operation manual. These manuals shall be complete and shall include all information necessary to allow City's personnel to operate and maintain the generator.

Generator mounting pad shall be reinforced concrete to carry the weight of the unit and shall extend a minimum of 3 inches beyond generator housing and 4 inches above the surrounding finish grade. Chamfer all edges 3/4 inch.

The generator shall be provided with a 2-year service agreement and set of manufacturer's recommended spare parts, including filters, belts, hoses, and similar items.

N. Force Main

The force main shall be installed and tested in accordance with the Sanitary Sewer System – General Standards, and as further described herein.

The force main shall be a minimum 6-inch-diameter ductile iron Class 52 with a minimum cover of 4'-0". PVC or butt-fused HDPE force mains may be approved by the City in special circumstances. Where feasible, there shall be no intermediate high point between the pump station and the force main discharge point. If an intermediate high point is needed a sewage air and vacuum release assembly shall be installed.

Where feasible, the force main shall discharge to a new manhole prior to entering the existing system. The force main shall enter the discharge manhole at the same crown elevation as the outlet gravity pipe and shall be channeled accordingly. Walls, cone and neck of the discharge manhole shall be coated in accordance with the specification for wet well coating. Where the use of a new discharge manhole is not feasible, a drop connection to an existing manhole may be used, with City approval, and the existing manhole rechanneled and coated accordingly.

A minimum of one emergency bypass pump connection equipped with a female cam lock fitting and plug shall be located near the wet well, in a location specified by the City, with drain back to the wet well. Additional connections may be required for high capacity lift stations, as determined by the City's Engineer. Valves shall be located within a valve vault per the standard detail.

O. Lift Station Test Program

The Developer shall perform, as a minimum, the following tests and provide the City written documentation of the date performed and results obtained. Pump tests shall meet or exceed specified capacity. The City shall be informed of the testing schedule 72 hours prior to the test and shall be present during testing. All tests shall be supervised by the manufacturer's representative for the applicable equipment, and documentation shall be provided of satisfactory installation of the factory-built pump station and associated control systems, the generator and transfer switch, and the electrical system, at the conclusion of the testing.

1. Demonstrate proper station operation under normal operating and individual alarm conditions.

2. Pump capacity by drawdown test, for each pump operating alone and each combination of multiple pump operation. Record amperes and furnish pressure gauge to record static head and total dynamic head for each condition at one specific wet well level.

3. Control/telemetry panel operation. Float switch operation.

4. Generator load test.

5. Automatic transfer to and from auxiliary power.

6. Control and telemetry to terminal strip.

7. Sewage pump vibration test.

Fill water for testing shall be obtained in accordance with the cross-connection policies of the local water purveyor.

Documentation of satisfactory installation shall be provided for the pump station and the auxiliary generator. Documentation of satisfactory installation shall be in the form of a notarized manufacturer's affidavit submitted by the manufacturer or an authorized representative, certifying that:

1. The equipment has been properly installed and lubricated;

2. The equipment is in accurate alignment;

3. The manufacturer was present when the equipment was placed into operation;

4. The manufacturer has checked, inspected, and adjusted the equipment as necessary;

5. The equipment is free from any undue stress imposed by connecting piping or anchor bolts;

6. The equipment is not imposing any undue stress on any connecting members;

7. The equipment has been operated satisfactorily under full load conditions;

8. The manufacturer has inspected his equipment during the operational demonstrations and system validation tests to the extent specified, and the equipment is fully covered under the terms of the guarantee.

P. Training and Follow-Up Inspection

The following training and follow-up service shall be provided at the Developer's expense, by the manufacturer's representative, and shall be in addition to any testing and inspection services required for installation and startup. Startup and training shall not occur until approved O&M materials have been provided to the City. Training shall occur after the onsite testing and startup for the entire lift station facility is complete. Training shall be coordinated with training for the other lift station components. Training shall not occur on the same day as site testing and/or startup for any of the lift station components. Training and follow-up inspections shall be scheduled in advance with the City.

1. Pump Station

   a. 1/2 day training at startup.

   b. 1/2 day training at 6 months, to include general warranty inspection plus tightening and sealing of suction piping for the wet well mounted station.

2. Generator

   a. 1/2 day training at startup.

   b. 1/2 day training at first warranty inspection.

3. Electrical/Controls

   a. 1/2 day training at startup, except that VFDs (if supplied) shall have an additional 1/2 day training specific to the VFDs).

Q. Operations and Maintenance Information

Record (as-constructed) information for the lift station shall be incorporated into the record drawings for the developer extension. In addition, the Developer shall submit operations and maintenance information for the lift station equipment.

The following information shall be furnished for all items of equipment installed on the project requiring operational and/or maintenance procedures, and for any additional items indicated by the Engineer.

1. Lubrication Information: This shall consist of the manufacturer's recommendations regarding the lubricants to be used and the lubrication schedule to be followed.

2. Drawings and Diagrams: Drawings shall include record (as-constructed) version of dimensional outline drawings in either full-size (22" x 34") or half-size (11" x 17") format. Diagrams shall record (as-constructed) version of schematic electrical and connection diagrams, showing points of connection, numbers of circuits, size and number of conduits and conductors.

3. Startup Procedures: These instructions shall consist of equipment manufacturer's recommendations for installation, adjustment, calibration, and troubleshooting.

4. Operating Procedures: These instructions shall consist of the equipment manufacturer's recommended step-by-step procedures for starting, operating, and stopping the equipment under specified modes of operation.

5. Preventive Maintenance Procedures: These instructions shall consist of the equipment manufacturer's recommended steps and schedules for maintaining the equipment.

6. Overhaul Instructions: These instructions shall consist of the manufacturer's directions for the disassembly, repair and reassembly of the equipment and any safety precautions that must be observed while performing the work.

7. Parts List: This list shall consist of the generic title and identification number of each component part of the equipment. Component equipment items provided by other manufacturers shall be identified with the manufacturer's name, part description, and part number.

8. Spare Parts List: This list shall consist of the manufacturer's recommendations of number of parts and quantities that should be stored by the Owner and any special storage precautions that may be required. Note spares provided.

9. Exploded View: Exploded or cut views of equipment shall be provided if available as a standard item of the manufacturer's information. When exploded or cut views are not available, plan and section views shall be provided with detailed callouts.

10. Copies of factory test results, startup check lists, manufacturer's affidavits of proper installation, initial equipment set points and related documentation

11. Maintenance Information Summaries as specified herein.

Four preliminary review copies of the manufacturer's equipment O&M manuals shall be submitted to the Engineer for review at the time of equipment delivery and not later than 7 days prior to product training. All manuals except one return copy with comments will be retained by the Engineer. Allow 14 days for Engineer's review.

Four copies of the final acceptable operational and maintenance materials shall be submitted to the Engineer prior to project acceptance.

Maintenance Information Summaries (MIS) shall be provided for the following component equipment items, within the appropriate section of the equipment manuals, prepared according to the format specified herein:

- Non-clog pumps
- Sump pumps
- Heating and ventilation equipment
- Standby generator
- Valves (larger than 1 inch in size)

Maintenance information summaries shall be furnished on 8-1/2" x 11" paper and on diskette in a City-approved format. The Engineer shall provide a Microsoft Excel template file on diskette. The MIS shall contain the following information compiled from manufacturer's recommendations in the order shown.

1. Description or name of item of equipment.
2. Manufacturer.
3. Name, address, and telephone number of local manufacturer's representative.
4. Serial number (where applicable).
5. Equipment nameplate data including model number.
6. Recommended maintenance procedures:
    - Description of procedures.
    - Maintenance frequency required.
    - Lubricant(s) or other materials required (where applicable), including type of lubricant, lubricant manufacturer, and specific compound.
    - Additional information as required for proper maintenance.
7. Spare parts provided (where applicable).

All operation and maintenance information shall be comprehensive and detailed, and shall contain information adequately covering all normal operation and maintenance procedures. The information shall be organized in high quality D-style 3-ring binders. The binders shall be provided with spine labels, cover inserts, a table of contents and tab sheets to permit easy location of desired information. Each volume shall contain an index for the entire set. Sheets shall be 3-hole punched, and not otherwise punched for comb binding or spiral binding.

All information shall be specifically for items of equipment installed in the Project. Material not directly applicable shall be removed, neatly lined out, or omitted from catalogs or other printed information.

Lubricants shall be described in detail, including type, recommended manufacturer, and manufacturer's specific compound to be used.

If manufacturer's standard brochures and manuals are used to describe operating and maintenance procedures, such brochures and manuals shall be modified to reflect only the model or series of equipment used on this project. Extraneous material shall be crossed out neatly or otherwise annotated or eliminated.

# CHAPTER 8

# WATER SYSTEM STANDARDS

## 8.1 GENERAL

The standards established by this chapter are intended to represent the minimum standards for the design and construction of water system facilities. Greater or lesser requirements may be mandated by the City due to localized conditions. Extensions, connections or modifications to the existing system shall be in compliance with the State Department of Health.

Off-site improvements to the existing system may be warranted based on (1) the condition and capacity of the existing water system; and (2) impacts caused by the proposed development. These off-site improvements (in addition to "on-site improvements) shall be completed as determined by the City Engineer to mitigate impacts caused by the development.

## 8.2 DESIGN STANDARDS

The design of water system improvements shall depend on their type and local site conditions. The design elements of water system improvements shall conform to City Standards as set forth herein.

A. Detailed plans shall be submitted for the City's review which provide the locations, size, and type of the proposed water system and points of connection. These Plans shall be separate from Sewer Plans.

B. Project plans shall conform to the requirements of the Plan Checklist.

C. Computations and other data used for design of the water system shall be submitted to the City for approval.

D. Material and installation specifications shall contain appropriate requirements that have been established by the industry in its technical publications, such as ASTM, AWWA, WPCF, and APWA standards. Requirements shall be set forth in the specifications for the pipe and methods of bedding and backfilling so as not to damage the pipe or its joints.

E. The location of the water mains, valves, hydrants, and principal fittings including modifications shall be staked by the Developer. No deviation shall be made from the required line or grade. The Contractor shall verify

and protect all underground and surface utilities encountered during the progress of this work.

F. Unless otherwise approved or required by the City Engineer, the water main shall be ductile iron pipe class as shown below. The minimum nominal size for water mains shall be 8 inches, unless otherwise approved/required by City Engineer.

**TABLE 8-1**

**Water Main Thickness**

| Class | Pipe Diameter |
|---|---|
| Class 52 | 4" through 14" |
| 16" and larger | Class 50 |

EXCEPTION: 6-inch hydrant spools and pipelines located beneath rock or retaining walls shall be Class 53.

G. All fittings shall be cement-lined ductile iron.

H. Water mains shall be laid only in dedicated street, rights-of-ways or easements shown on preliminary plats or which have been granted to the City. A street is normally not considered dedicated until the plat which created it has been officially filed with the County Auditor.

I. All water main distribution pipeline construction shall have a minimum 36-inch cover from finished grade and 42-inch cover over transmission mains. Mains shall generally be located parallel to and 6 feet northerly or easterly of street centerline. Water mains shall be extended to the far property line(s) of the property being served. Off-site extensions may be required to hydraulically loop existing and new systems. Oversizing of water mains may be required to be installed per City's current Water Comprehensive Plan.

J. Fire hydrants are generally required approximately every 600 feet in residential areas, and every 300 feet in commercial areas. However, fire hydrants shall be furnished and installed at all locations as specifically mandated by the local fire marshal and/or per the International Building Code and the International Residential Code.

K. Fire hydrants on dead end streets and roads shall be located within approximately 300 feet from the frontage center of the farthest lot. Distances required herein shall be measured linearly along street or road.

L. Valves shall be installed at not more than 1,000-foot spacing. Valves shall be installed on all legs of all tees and crosses except fire hydrant tees.

M. Pipes connecting hydrants to mains shall be at least 6 inch in diameter and be less than 50 feet in length.

N. Dead end lines are not permitted except where the Developer can demonstrate to the City's satisfaction that it would be impractical to extend the line at a future date. Water mains on platted cul-de-sacs shall extend to the plat line beyond the cul-de-sac to neighboring property for a convenient future connection, and extended off-site to create a hydraulic loop, or, as minimum, have a 4-inch blow off assembly installed at the termination point.

O. Bends shall be included in the design as needed to maintain proper depth and spacing from other utilities. Bends shall be utilized so as not to exceed allowable deflection at pipe joints in accordance with pipe manufacturer's recommendations.

P. Provide thrust blocking and/or restrained joints at all fittings and bends in accordance with the City standards and conditions.

Q. Provide anchor blocking at all up-thrust vertical bends in accordance with these standards. Blocking to be designed by Developer's Engineer.

R. Residential water service pipe shall be a minimum 1-inch-diameter high density "Poly" pipe, meeting or exceed ASTM D2239, 200 psi with copper tracer wire. The pipe shall be one continuous run from the water main corp stop to the meter setter, no joints are allowed. Larger service lines may be needed if otherwise required by the Uniform Plumbing Code in accordance with fixture units.

## 8.3 CONSTRUCTION REQUIREMENTS

A. Except as otherwise noted herein, all work shall be accomplished as recommended in applicable American Water Works Association (AWWA) Standards, and according to the recommendations of the manufacturer of the material or equipment concerned.

B. Prior to final inspection, all pipelines shall be tested and disinfected.

C. Prior to construction, the Contractor shall notify the City for a preconstruction meeting

D. Work shall be performed only by contractors experienced in laying public water mains.

E. Prior to any work being performed, the Contractor shall contact the City Manager or City Engineer to set forth his proposed work schedule.

F. Contractor shall obtain approval of materials to be used from City Manager and/or City Engineer prior to ordering of materials.

G. During water main installation calcium hypochlorite granules shall be added to each section of new water main in the proportions indicated in the table below. The resulting chlorine concentration within the water main shall not be less than 50 mg/L (see Standard Specifications, Section 7-09.3(24)D).

**TABLE 8-2**

**Calcium Hypochlorite (65 Percent Chlorine) Addition Per 100 Feet of Pipe**

| Pipe Diam. | Quantity | |
|---|---|---|
| (Inches) | Grams | Ounces |
| 4 | 0.67 | 0.02 |
| 6 | 1.52 | 0.05 |
| 8 | 2.70 | 0.09 |
| 10 | 4.22 | 0.15 |
| 12 | 6.07 | 0.21 |

H. All closure fittings shall be swabbed with a 5 percent chlorine solution of chlorine immediately prior to installation per AWWA Standard C651.

I. Specific requirements regarding pressure testing and bacteriological testing are presented below in the Water Pipe Testing and Disinfection Section.

J. All materials shall be new and undamaged.

K. Provide bends in field to suit construction and in accordance with pipe manufacturer's recommendations so as not to exceed allowable deflection at pipe joints.

L. Meter services and meter boxes shall be set to final grade and all adjustments shall be made prior to final pressure testing of the system. Service inlet shall be centered at inlet end of box and faced toward outlet end of box parallel with long sides.

M. Meter setters shall be Mueller B-2400, or Ford Series 70 with top entry dual check valve.

N. All water services shall end within road right-of-way or easements.

O. All meters shall be installed by the City, and the Developer shall pay the current meter installation charge.

P. Contractor shall furnish and install one water sample station for development in size of 1 to 10 lots. One additional station is required to be furnished and installed for each additional 50 lots or portions thereof.

Q. All new buildings and residences shall include in their water service a suitable pressure reducing valve to protect the plumbing from excessive pressures, unless waived on the application form of the City.

R. All new construction shall comply with the current Cross-Connection Control requirements.

S. Cut in connections shall <u>not</u> be made on Fridays, holidays or weekends. All tapping sleeves and tapping valves shall be pressure tested prior to making connection to existing mains.

T. The pipe and fittings shall be inspected for defects before installation. All lumps, blisters and excess coal tar coating shall be removed from the bell and spigot end of each pipe, and the outside of the spigot and the inside of the bell shall be wire-brushed and wiped clean and dry, and free from oil and grease before the pipe is laid.

U. Every precaution shall be taken to prevent foreign material from entering the pipe while it is being placed in the line. After placing a length of pipe in the trench, the spigot end shall be centered in the bell and pipe forced home and brought to correct line and grade. The pipe shall be secured in place with select backfill tamped under it. Precaution shall be taken to prevent dirt from entering the joint space. At times when pipe laying is not in progress, the open ends of pipe shall be closed by a water-tight plug. If water is in the trench when work resumes, the seal shall remain in place until the trench is pumped completely dry. No pipe shall be laid in water or when trench conditions are unsuitable.

V. The cutting of pipe for inserting fittings or closure pieces shall be done in a neat and workmanlike manner, without damage to the pipe or cement lining, and so as to leave a smooth end at right angles to the axis of the

pipe. When pipe lengths are cut, the outer edge shall be beveled to prevent damage to the gasket during jointing of pipes.

W. Pipe shall be laid with bell ends facing in the direction of the laying, unless directed otherwise by the City. Wherever it is necessary to deflect pipe from a straight line, the amount of deflection allowed shall not exceed pipe manufacturer's recommendations.

X. For connection of mechanical joints, the socket, plain end of each pipe and gasket shall be cleaned of dirt before jointing, and shall be jointed according to manufacturer’s directions. Bolts shall be tightened alternately at top, bottom and sides, so pressure on gasket is even.

Y. For connection of push-on joints, the jointing shall be done according to manufacturer’s recommendations, with special care used in cleaning gasket seat to prevent any dirt or sand from getting between the gasket and pipe. Lubricant to be used on the gasket shall be non-toxic and free from contamination. When a pipe length is cut, the outer edge of the cut shall be beveled with a file to prevent injury to the gasket during jointing.

Z. Valves, fittings, plugs and caps shall be set and jointed to pipe in the manner per manufacturers’ recommendations. All dead ends on new mains shall be closed with dead end M.J. caps.

AA. Fittings shall be “blocked” with poured-in-place concrete, with a firm minimum bearing against an undisturbed earth wall. Timber blocking will not be permitted. Thrust blocks shall be poured as soon as possible after setting the fittings in place to allow the concrete to “set” before applying the pressure test. The concrete thrust blocks shall be in place before beginning the pressure test. Anchor blocks shall be allowed to set sufficiently to develop the necessary bond strength between the reinforcing rods and the concrete anchor before beginning the pressure test.

BB. All of the new piping, valves and blocking shall have been installed, disinfected and tested up to the point of cutting into existing lines before the crossover is made. The crossover to the existing system shall be in full readiness, including the cut and sized specials. Forty-eight-hour notice shall be given the City in advance of the planned “cut-ins.” All sleeves shall be ductile iron.

CC. Contractor shall notify City’s Manager and obtain approval from him prior to any water shut-off or turn-on, affecting the water system, a minimum of 48 hours in advance.

DD. Road restoration shall be per these Standards. Developer and Contractor shall become familiar with all City conditions of required permits, and shall adhere to all conditions and requirements.

EE. Before acceptance of the water system by the City, all pipes, assemblies, and other appurtenances shall be cleaned of all debris and foreign material. After all other work is completed and before final acceptance, the entire roadway, including the roadbed, planting, sidewalk areas, shoulders, driveways, alley and side street approaches, slopes, ditches, utility trenches, and construction areas shall be neatly finished to the lines, grades and cross sections for a new roadway consistent with the original section.

## 8.4 MATERIALS

A. Water Mains and Fittings

1. Water mains to be installed unless otherwise approved (or required) in writing by the City Engineer shall be ductile iron pipe for all sizes.

2. The ductile iron pipe shall conform to ANSI/AWWA C151/A21.51-91 Standards, and current amendments thereto, except the ductile iron pipe shall be thickness Class 52 for 4-inch through 14-inch-diameter pipe (except for 6-inch hydrant spools which shall be Cl. 53) and Class 50 for 16 inches and larger. Grade of iron shall be a minimum of 60-42-10. The pipe shall be cement lined to a minimum thickness of 1/16 inch, and the exterior shall be coated with an asphaltic coating. Each length shall be plainly marked with the manufacturer's identification, year case, thickness, class of pipe and weight.

3. Type of joint shall be mechanical joint or push-on type, employing a single gasket, such as "Tyton," except where otherwise calling for flanged ends. Bolts furnished for mechanical joint pipe and fittings shall be high strength ductile iron, with a minimum tensile strength of 50,000 psi.

4. Restrained joint pipe, where shown on the Plans shall be push-on joint pipe with "Fast Tight" gaskets as furnished by U.S. Pipe or equal for 12-inch diameter and smaller pipe and "TR FLEX" as furnished by U.S. Pipe or equal for 16-inch and 24-inch-diameter pipes. The restrained joint pipe shall meet all other requirements of the non-restrained pipe.

5. All pipe shall be jointed by the manufacturer's standard coupling, be all of one manufacturer, be carefully installed in complete compliance with the manufacturer's recommendations.

6. Joints shall be "made up" in accordance with the manufacturer's recommendations. Standard joint materials, including rubber ring gaskets, shall be furnished with the pipe. Material shall be suitable for the specified pipe size and pressures.

7. All fittings shall be short-bodied, ductile iron complying with applicable ANSI/AWWA C110 or C153 Standards for 350 psi pressure rating for mechanical joint fittings and 250 psi pressure rating for flanged fittings. All fittings shall be cement lined and either mechanical joint or flanged, as indicated on the Plans.

8. Fittings in areas shown on the Plans for restrained joints shall be mechanical joint fittings with a mechanical joint restraint device. The mechanical joint restraint device shall have a working pressure of at least 250 psi with a minimum safety factor of 2:1 and shall be EBAA Iron, Inc., MEGALUG, Star Pipe Products, or approved equal.

9. All couplings shall be ductile iron mechanical joint sleeves. If existing pipe is not ductile iron, extended range couplings are required.

B. Valves

All valves 14 inch and larger shall generally be furnished and installed as butterfly valves. All valves 12 inch and smaller shall generally be furnished and installed as resilient seat gate valves.

1. Resilient-Seated Gate Valves

The gate valves shall be <u>ductile iron body</u> valves, iron disk completely encapsulated with polyurethane rubber and bronze, non-rising stem with "O" ring seals conforming to AWWA C509 or C515. The valves shall open counter-clockwise and be furnished with 2-inch square operating nuts except valves in vaults shall be furnished with handwheels. All surfaces, interior and exterior shall be fusion bonded epoxy coated, acceptable for potable water.

For applications with working pressure above 175 psi, a valve rated as 250 psi or higher shall be used.

Valves shall be Mueller A-2360 Series, M&H 515 Series, or approved equal.

2. Butterfly Valves

Butterfly valves shall be ductile iron body of the tight closing rubber seat type with rubber seat either bonded to the body or mechanically retained in the body with no fasteners or retaining hardware in the flowstream. The valves shall meet the full requirements of AWWA C504, Class 150B except the valves shall be able to withstand 200 psi differential pressure without leakage. The valves may have rubber seats mechanically affixed to the valve vane. Where threaded fasteners are used, the fasteners shall be retained with a locking wire or equivalent provision to prevent loosening. Rubber seats attached to the valve vane shall be equipped with stainless steel seat ring integral with the body, and the body internal surfaces shall be epoxy coated to prevent tuberculations buildup, which might damage the disc-mounted rubber seat.

No metal-to-metal sealing surfaces shall be permitted. The valves shall be bubble-tight at rated pressures with flow in either direction, and shall be satisfactory for applications involving valve operations after long periods of inactivity. Valve discs shall rotate 90 degrees from the full open position to the tight shut position.

Valves shall be Henry Pratt Company "*Groundhog,*" M&H, or Mueller "*Lineseal III.*"

3. Tapping Sleeves and Tapping Valves

The tapping sleeves shall be rated for a working pressure of 250 psi minimum and furnished complete with joint accessories. Tapping sleeves shall be constructed in two sections for ease of installation and shall be assembled around the main without interrupting service.

Mechanical joint style sleeves shall be ductile iron and comply with AWWA C110. Ductile iron mechanical joint style sleeves are required for all size-on-size connections. Mechanical joint sleeves shall be cast by Clow, Dresser, Mueller, Tyler, U.S. Pipe or approved equal.

Fabricated steel style sleeves shall be fusion bonded epoxy-coated, acceptable for potable water. Fabricated steel style sleeves will not be allowed for size-on-size connections.

Tapping valves shall be provided with a standard mechanical joint outlet for use with ductile iron pipe and shall have oversized seat rings to permit entry of the tapping machine cutters. In all other respects, the tapping valves shall conform to the resilient seat gate valves herein specified with regards to operation and materials.

The tapping sleeve and valve shall be tested to 100 psi (air) prior to tapping the main.

The installation contractor for the tapping sleeves and valves shall be approved by the City.

4. All Valves

The valves shall be set with stems vertical. The axis of the valve box shall be common with the axis projected off the valve stem. The tops of the adjustable valve boxes shall be set to the existing or established grade, whichever is applicable.

All valves with operating nuts located more than 4'-0" below finished grade shall be equipped with extension stems to bring the operating nut to within 18 inches of the finished grade.

At the top of the extension stem, there shall be a 2-inch standard operating nut, complete with a centering flange that closely fits the 5-inch pipe encasement of the extension stem. The valve box shall be set in a telescoping fashion around the 5-inch pipe cut to the correct length to allow future adjustment up or down.

Each valve shall be provided with an adjustable two-piece cast iron valve box of 5-inches minimum inside diameter. Valve boxes shall have a top section with an 18-inch minimum length. The valve boxes and covers shall be Olympic Foundry No. 940 or equal.

Valves located in easements or outside of paved areas shall have concrete collars with a minimum size of 2'-0" diameter by 4-inches thick.

4. Valve Markers

Provide a blue Carsonite valve marker post for each valve outside of asphalt.

Markers shall be placed at the edge of the right-of-way opposite the valve and set so as to leave 2'-0" of the post exposed above grade. The distance in feet and inches to the valve shall be clearly stenciled on the side facing the valve in black numerals 2-inches in height.

5. Pressure Reducing and Relief Valves

When water main pressure exceeds 100 psi, an approved pressure reducing valve with an approved pressure relief device shall be installed to reduce the pressure to 60 psi or lower. Pressure reducing valve stations shall generally consist of a large and a small valve for high flow and low flow periods. The Pressure reducing valve stations shall be approved by the City on a case by case basis.

C. Fire Hydrants

All fire hydrants shall be approved by the National Board of Fire Underwriters and conform to AWWA Specification C502, break-away type, in which the valve will remain closed if the barrel is broken. The hydrant barrel shall have a diameter of not less than 8-1/2 inches, and the valve diameter shall be not less than 5-1/4 inches. Each hydrant shall be equipped with two 2-1/2-inch hose ports (National Standard Thread), and one 4-1/2-inch pumper connection (National Standard Thread), with permanent Storz hydrant adaptor and Storz blind cap installed on each pumper port. Each hydrant shall be equipped with a suitable positive acting drain valve and 1-1/4-inch pentagonal operating nut (counter-clockwise opening). A blue pavement marker shall be furnished and installed in the pavement in front of each hydrant.

The holding spools between the gate valve and fire hydrant shall be made from 6-inch Class 53 ductile iron pipe, 0.34-inch wall thickness. The hydrant and gate valve shall be anchored in place using holding spools and mechanical joint restraint device. Holding spools with length in excess of 17 feet shall be supplied with an M. J. sleeve and mechanical joint restraint device.

The fire hydrants shall be painted per local fire marshal requirements with two coats of Preservative Brand caterpillar or international yellow paint. After installation, they shall be wire brushed and field painted with two

additional coats of similar yellow enamel paint. Distance to the hydrant valve shall be clearly stenciled in black numerals 2 inches in height on the fire hydrant below the pumper port.

Between the time that the fire hydrant is installed and the completed facility is placed in operation, the fire hydrant shall at all times be wrapped in burlap, or covered in some other suitable manner to clearly indicate that the fire hydrant is not in service.

D. Blowoffs and Air Relief Assemblies

Two-inch or 4-inch blowoff assemblies shall be installed at the terminus of all dead end water mains. Blowoffs utilized by the Contractor for flushing the water main shall be sufficient size to obtain 2.5 feet per second velocity in the main. Temporary blowoffs shall be removed and replaced with a suitably sized watertight brass plug.

Two-inch air and vacuum release valves shall be installed at principal high points in the system. See detail.

The installation of these items shall include connection piping, gate valve, valve box, and all accessories. Valve markers shall be optional with City.

## 8.5 WATER PIPE TESTING AND DISINFECTING

All pipelines shall be tested and disinfected prior to acceptance of work. A water hydrant meter shall be required and procured from the City for all water utilized for flushing pipelines. All pumps, gauges, plugs, saddles, corporation stops, miscellaneous hose and piping, and measuring equipment necessary for performing the test shall be furnished, installed and operated by the Contractor. Feed for the pump shall be from a barrel or other container within the actual amount of "makeup" water, so that it can be measured periodically during the test period.

The pipeline shall be backfilled sufficiently to prevent movement of the pipe under pressure. All thrust blocks shall be in place and time allowed for the concrete to cure before testing. Where permanent blocking is not required, the Contractor shall furnish and install temporary blocking.

As soon as pipe is secured against movement under pressure, it may be filled with water. New water mains are only filled using an approved backflow prevention assembly. The water main is filled from the lower elevation end, so that as the water main is filled the chlorine is contacted and dissolved and the chlorine is spread relatively uniformly through the length of the new water main.

The chlorinated water is allowed to remain in contact with the new system for a minimum of 24-hours. After 24-hours, water may be added to the water main for the purposes of pressure testing. Pressure testing must also include testing against valves.

Contractor shall preflush all water mains after water has remained in the main for 24 hours and before pressure testing the main.

After the pipe is filled and all air expelled, it shall be pumped to a test pressure of 250 psi, and this pressure shall be maintained for a period of not less than 30 minutes to insure the integrity of the thrust and anchor blocks. **The contractor/developer is cautioned regarding pressure limitations on butterfly valves.** All tests shall be made with the hydrant auxiliary gate valves open and pressure against the hydrant valve. Hydrostatic tests shall be performed on every complete section of water main between two valves, and each valve shall withstand the same test pressure as the pipe with no pressure active in the section of pipe beyond the closed valve.

In addition to the hydrostatic pressure test, a leakage test shall be conducted on the pipeline. The leakage test shall be conducted at 150 psi for a period of not less than 1 hour. The quantity of water lost from the main shall not exceed the number of gallons per hour determined by the formula:

$$L = \frac{SD(P)^{0.5}}{266{,}400}$$

in which

L = Allowable leakage, gallons/hour
S = Gross length of pipe tested (ft)
D = Nominal diameter of the pipe in inches
P = Average test pressure during the leakage test, psi

Defective materials or workmanship, discovered as a result of the tests, shall be replaced by the Contractor at the Contractor's expense. Whenever it is necessary to replace defective material or correct the workmanship, the tests shall be rerun at the Contractor's expense until a satisfactory test is obtained.

If the pressure tests fails and retesting of the water main is required the Contractor shall flush the water main with a water chlorine bleach solution (1 gallon of 5 percent bleach to 1,000 gallons of water). The volume of new water pumped into and through the water main is three times the pipe volume.

After successful pressure testing, and additional chlorine contact if necessary, the water main is thoroughly flushed to remove all super chlorinated water from the

new water main. A minimum of five pipe volumes is flushed out of the water main. After flushing, samples are collected for bacteriological analysis.

After receipt of a satisfactory bacteriological test the system is flushed at a flow rate sufficient to develop a water velocity in the pipe of 2.5 ft/sec for a minimum of five pipe volumes. Pressure tests and bacteriological tests are completed and must be passed before any new water main is physically connected to the system. **No new water main is connected to the system until a satisfactory bacteriological analysis is obtained.**

All closure fittings shall be swabbed with a 5 percent chlorine solution of chlorine immediately prior to installation per AWWA Standard C651. Additional samples for bacteriological analysis shall be collected and analyzed after the final connections are made.

In all disinfection processes, the Contractor shall take particular care in flushing and wasting the chlorinated water from the mains to assure that the flushed and chlorinated water does no physical or environmental damage to property, streams, storm sewers or any waterways. The Contractor shall chemically or otherwise treat the chlorinated water to prevent damage to the affected environment, particularly aquatic and fish life of receiving streams.

City forces only will be allowed to operate existing and new tie-in valves. The Contractor's forces are expressly forbidden to operate any valve on any section of line, which has been accepted by the City.

## 8.6 BACKFLOW PREVENTION AND SPRINKLER SYSTEMS

1. All water systems connected to the public water system shall have backflow prevention as required by WAC 248-54-285.

2. All fire sprinkler systems as mandated/proposed/or required by the local fire marshal and/or City Ordinance that have a fire department connection shall have backflow prevention as required by WAC 248-54-285.

3. Building sprinkler systems may be required based on Building Codes/Fire Marshall requirements.

## 8.7 SERVICE CONNECTIONS

Individual services to each property shall be installed and connected to the new water mains. New services from existing mains will be installed by the City. The Developer shall be responsible for permitting, traffic control, excavation to expose main, shoring to protect City employees, backfilling trench, and completion of all restoration.

Upon completion of the installation of the water main (before testing and disinfection) services shall be installed by connecting to the water main and extending the service line to the property line as shown on the Standard Details or approved equal. Larger service lines shall be of the type and style as designated in the Standard Details and shown on the Plans.

All single family residential homes, and each living unit in a building up to a quad-plex shall be provided with its own meter and meter setter including a check valve. All services supplying water to more than one living unit shall be provided with Washington State-approved backflow prevention located immediately behind and on the property side of the water service box. Irrigation, meters and services supplying internal fire suppression system shall be completed with double check valve assemblies (DCVA). All other connections shall require reduced pressure backflow assemblies (RPBA). Commercial fire sprinkler system, if unmetered shall require reduced pressure detector assemblies (RPDA).

All irrigation using chemical feed, or water features, including decorative ponds, pools and fountains requiring make-up water shall be protected from backflow into the public water supply by a **minimum** of an approved air-gap to be located at the fill point of the pond or water feature. This “air-gap” shall be inspected by the City prior to filling. In all instances, the water supply used for filling purposes shall be protected by a double check valve assembly (DCVA) installed behind the meter for new construction or retrofitted as close as practical on modified systems.

Corporation stops and the single meter shutoff valves shall be Mueller, Ford, or A.Y. McDonald with the type and style noted on the Standard Details or approved equal. Included as a part of the service connection shall be the furnishing and installation of the meter box complete with lid, set flush with the proposed finished grade of the lot in the designated location near the property line, all as shown on the Standard Details. The angle type of shut-off valve and angle type dual check valve shall be set inside the meter box in a proper position for installation of a future meter by the City.

Service lines between the main and the property line shall be placed at a trench depth sufficient to maintain a 3'-0" cover over the top of the service line for its full

length, taking into consideration the final finished grade of the proposed street and the final finished grade of any storm ditches.

Upon completion of each service line as indicated herein, the Developer shall flush the service line to remove the debris that may interfere with the future meter installation, and further verify that the service line has full pressure and flow to the meter box.

## 8.8 1-1/2-INCH AND LARGER METERS

If extensions require water meters 1-1/2 inches or larger, then such entire meter installation, including valves, piping, vaults or meter boxes, drain lines and meters shall be furnished and installed by the Developer conforming to City standards. Activation of meter is subject to conformance with City requirements and payment of connection fees.

# CHAPTER 9

# MISCELLANEOUS UTILITY SERVICES AND ADDITIONAL DEVELOPMENT REQUIREMENTS

## 9.1 GENERAL

The standards established by this chapter are intended to represent the **minimum** standards for the design and construction of additional facilities. Greater or lesser requirements may be mandated by the City due to localized conditions. The following design and construction considerations shall apply.

## 9.2 UTILITY SERVICES

All utility lines, including electric, telephone, fire alarm and television cables shall be placed underground prior to paving. Easement for maintenance of all utilities, both on and offsite, shall be provided as applicable to the satisfaction of the City Engineer.

## 9.3 STREET LIGHTING

Street lighting shall be provided by the Developer to the guidelines established by the City Engineer. All costs of such, including, but not limited to, design, underground wiring, light standard base and luminaire shall be borne by the developer. The City shall approve of all street lighting plans as furnished by the developer to include size, spacing, height and type of pole/illuminaire.

## 9.4 CABLE TELEVISION

Service lines (suitable empty conduits placed and capped) for cable television shall be installed underground (location as approved by City Engineer) on all subdivisions regardless of whether or not cable television service is currently available.

## 9.5 STREET NAME AND TRAFFIC SIGNS

All street name signs and traffic directional signs shall be designated by the City and provided by the Developer. All costs of providing the signs, to include the installation, labor, materials, and other relevant City costs associated with determining the type, location, and associated work items shall be invoiced to and paid by the developer.

## 9.6 LANDSCAPING

Street landscaping shall be provided by the developer to the guidelines established in these standards and a landscaping plan shall be submitted as part of the plan package for City review and approval.

## 9.7 EROSION CONTROL

The detrimental effects of erosion and sedimentation shall be minimized by conforming with the following general principles:

A. Soil shall be exposed for the shortest possible time.

B. Reducing the velocity and controlling the flow of runoff.

C. Detaining runoff on the site to trap sediment.

D. Releasing runoff safely to downstream areas.

In applying these principles and accepted Best Management Practices (BMPs) as approved by the Department of Ecology in the latest city approved edition of the Stormwater Management Manual for Western Washington, the Developer and/or Contractor shall provide for erosion control through such BMPs as conducting work in phases; minimizing the disturbance to vegetation; providing mulch and/or temporary cover, sedimentation basins, and/or diversions in critical areas during construction; controlling and conveying runoff; and establishing permanent vegetation and installing erosion control structures as soon as possible.

1. Trench Mulching

   Where there is danger of backfill material being washed away due to steepness of the slope along the direction of the trench, backfill material shall be compacted and held in place by covering the disturbed area with mulch, jute matting or other accepted BMP practices.

2. Cover-Crop Seeding

   A cover crop shall be sown in all areas excavated or disturbed during construction that were not paved, landscaped and/or seeded prior to construction. Areas landscaped and/or seeded prior to construction shall be restored to their original or superior condition. Cover-crop seeding shall follow backfilling operations.

   The Developer and/or Contractor shall be responsible for protecting all areas from erosion until the cover crop affords such protection. The cover

crop shall be reseeded if required and additional measures taken to provide protection from erosion until the cover crop is capable of providing protection.

During winter months, the Contractor may postpone seeding, if conditions are such that the seed will not germinate and grow. The Developer and/or Contractor will not, however, be relieved of the responsibility of protecting all areas until the cover crop has been sown and affords protection from erosion.

The cover crop shall be sown at a rate of 10 to 15 pounds of seed per acre using a hand or power operated mechanical seeder capable of providing a uniform distribution of seed.

# MISCELLANEOUS FORMS

# CITY OF GRANITE FALLS

## DEVELOPER AGREEMENT

THIS AGREEMENT, by and between the City of Granite Falls, a municipal corporation, hereinafter referred to as "City", and _____, hereinafter referred to as "Developer":

WITNESSETH: That whereas the City of Granite Falls, a municipal corporation, provides water/sanitary/storm/gas or roadway service within this area, and the above-named Developer is preparing to construct an extension or modification or additions thereto, and said development requires the City's service;

WHEREFORE, THE PARTIES AGREE AS FOLLOWS:

1. Developer agrees to construct the water/sanitary/storm/gas or roadway system, or additions thereto, to be connected to the City's infrastructure, and to maintain such additions until such time as the improvements are accepted by the City, with the agreements conditioned as set forth below. The improvements, extension, or additions thereto, shall be located within that area commonly referred to as _____, which property is described in Exhibit "A" attached hereto and referred to hereinafter as "Premises".

2. As a condition precedent to City obligations under this agreement, the Developer shall construct the proposed water/sanitary/storm/gas/or roadway system, or additions thereto, within said premises in conformance with the minimum standards as set forth in the City's currently adopted Public Works Standards, as adopted together with any amendments thereto hereinafter made prior to the commencement of construction, and further to conform with the City's comprehensive planning documents, which agreement shall include oversizing of mains necessitated by the comprehensive plan.

3. The developer agrees that the construction of any infrastructure items, or additions thereto, shall not commence until the following conditions have been fulfilled:

    a. The developer shall furnish the City with four (4) sets of detailed plans for the proposed improvements, or additions thereto, at Developer's own expense, prepared by a qualified engineer currently licensed in the State of Washington.

    b. The above plans shall require the review and approval by the City and its Engineer, and the cost of such review shall be at the Developer's own expense.

c. Minimum requirements for all plans, or additions thereto, submitted to the City for review are given on the plan checklist in the Development Guidelines for Public Works Standards.

d. All permits have been received. Permits may include, but are not limited to, Right-of-Way Permit, Fill and Grade Permit, Stormwater Permit (issued by the Department of Ecology for fill and grade activities on sites larger than 1 acre).

e. Construction requirements in addition to the City standards and details for developer extensions, as adopted, are as follows:

1. All streets and/or roadways shall be graded to a minimum of two (2) feet above the crown of utility lines before installation of utility improvements, unless otherwise approved by the City Engineer.

2. All lots shall be fully staked to assist all parties involved in the proper location of utility services.

3. All contractors and subcontractors shall have a current Washington State Contractors License on file with the City.

4. The Developer's proposed improvements, or additions thereto, on Premises shall not be connected to the City system until authorized by- the City, and such connection shall be performed only under the supervision and approval of the City.

4. Indemnification/Hold Harmless:

a. The Developer shall defend, indemnify and hold the City, its officers, officials, employees and volunteers harmless from any and all claims, injuries, damages, losses or suits including attorney fees, arising out of or in connection with the performance of this Agreement, except for injuries and damages caused by the sole negligence of the City.

b. Should a court of competent jurisdiction determine that this Agreement is subject to RCW 4.24.115, then, in the event of liability for damages arising out of bodily injury to persons or damages to property caused by or resulting from the concurrent negligence of the Developer and the City Entity, its officers, officials, employees, and volunteers, the Developer's liability hereunder shall be only to the extent of the Developer's negligence. It is further specifically and expressly understood that the indemnification provided herein constitutes the Developer's waiver of immunity under Industrial Insurance, Title 51 RCW, solely for the purposes of this

indemnification. This waiver has been mutually negotiated by the parties. The provisions of this section shall survive the expiration or termination of this Agreement.

5. Insurance

a. The Developer shall procure and maintain insurance, as required in this Section, without interruption from commencement of the Developer's work through the term of the Agreement and for thirty (30) days after the Physical Completion date of the work, unless otherwise indicated herein.

b. No Limitation

The Developer's maintenance of insurance, its scope of coverage and limits as required herein shall not be construed to limit the liability of the Developer to the coverage provided by such insurance, or otherwise limit the City's recourse to any remedy available at law or in equity.

c. Minimum Scope of Insurance

The Developer's required insurance shall be of the types and coverage as stated below:

1. Automobile Liability insurance covering all owned, non-owned, hired and leased vehicles. Coverage shall be at least as broad as Insurance Services Office (ISO) form CA 00 01.

2. Commercial General Liability insurance shall be at least as broad as ISO occurrence form CG 00 01 and shall cover liability arising from premises, operations, stop gap liability, independent contractors, products-completed operations, personal injury and advertising injury, and liability assumed under an insured contract. The Commercial General Liability insurance shall be endorsed to provide a per project general aggregate limit, using ISO form CG 25 03 05 09 or an equivalent endorsement. There shall be no exclusion for liability arising from explosion, collapse or underground property damage. The City shall be named as an additional insured under the Developer's Commercial General Liability insurance policy with respect to the work performed in the City's right of way using ISO Additional Insured endorsement CG 20 10 10 01 and Additional Insured-Completed Operations endorsement CG 20 37 10 01 or substitute endorsements providing at least as broad coverage.

3. Workers' Compensation coverage as required by the Industrial Insurance laws of the State of Washington.

4. Builders Risk insurance covering interests of the City, the Developer, and any Subcontractors, and Sub-subcontractors in the work. Builders Risk insurance shall be on a special perils policy form and shall insure against the perils of fire and extended coverage and physical loss or damage including flood, earthquake, theft, vandalism, malicious mischief, and collapse. The Builders Risk insurance shall include coverage for temporary buildings, debris removal, and damage to materials in transit or stored off-site. This Builders Risk insurance covering the work will have a deductible of $5,000 for each occurrence, which will be the responsibility of the Developer. Higher deductibles for flood and earthquake perils may be accepted by the City upon written request by the Developer and written acceptance by the City Any increased deductibles accepted by the City will remain the responsibility of the Developer. The Builders Risk insurance shall be maintained until the City has accepted the work. An installation floater may be acceptable in lieu of Builders Risk for renovation projects only if approved in writing by the City.

d. Minimum Amounts of Insurance

The Developer shall maintain the following insurance limits:

1. Automobile Liability insurance with a minimum combined single limit for bodily injury and property damage of $1,000,000 per accident.

2. Commercial General Liability insurance shall be written with limits no less than $1,000,000 each occurrence, $2,000,000 general aggregate and a $2,000,000 products- completed operations aggregate limit.

3. Builders Risk insurance shall be written in the amount of the completed value of the project with no coinsurance provisions.

e. Public Entity Full Availability of Developer Limits

If the Developer maintains higher insurance limits than the minimums shown above, the City shall be insured for the full available limits of Commercial General and Excess or Umbrella liability maintained by the Developer, irrespective of whether such limits maintained by the Developer

are greater than those required by this Agreement or whether any certificate of insurance furnished to the City evidences limits of liability lower than those maintained by the Developer.

f. Other Insurance Provision

The Developer's Automobile Liability, Commercial General Liability and Builders Risk insurance policies are to contain, or be endorsed to contain that they shall be primary insurance as respect the City Entity. Any insurance, self-insurance, or self-insured pool coverage maintained by the City shall be excess of the Developer's insurance and shall not contribute with it.

g. Developer's Insurance for Other Losses

The Developer shall assume full responsibility for all loss or damage from any cause whatsoever to any tools, Developer's employee owned tools, machinery, equipment, or motor vehicles owned or rented by the Developer, or the Developer's agents, suppliers, contractors or subcontractors as well as to any temporary structures, scaffolding and protective fences.

h. Waiver of Subrogation

The Developer and the City waive all rights against each other, any of their Subcontractors, Sub-subcontractors, agents and employees, each of the other, for damages caused by fire or other perils to the extent covered by Builders Risk insurance or other property insurance obtained pursuant to the Insurance Requirements Section of this Contract or other property insurance applicable to the work. The policies shall provide such waivers by endorsement or otherwise.

i. Acceptability of Insurers

Insurance is to be placed with insurers with a current A.M. Best rating of not less than A: VII.

j. Verification of Coverage

The Developer shall furnish the City with original certificates and a copy of the amendatory endorsements, including but not necessarily limited to the additional insured endorsements, evidencing the Automobile Liability and Commercial General Liability insurance of the Developer before commencement of the work. Before any exposure to loss may occur, the

Developer shall file with the City a copy of the Builders Risk insurance policy that includes all applicable conditions, exclusions, definitions, terms and endorsements related to this project. Upon request by the City, the Developer shall furnish certified copies of all required insurance policies, including endorsements, required in this contract and evidence of all subcontractors' coverage.

k. Subcontractors

The Developer shall cause each and every Subcontractor to provide insurance coverage that complies with all applicable requirements of the Developer-provided insurance as set forth herein, except the Developer shall have sole responsibility for determining the limits of coverage required to be obtained by Subcontractors. The Developer shall ensure that the Public Entity is an additional insured on each and every Subcontractor's Commercial General liability insurance policy using an ) using an endorsement as least as broad as ISO CG 20 10 10 01 for ongoing operations and CG 20 37 10 01 for completed operations.

l. Notice of Cancellation

The Developer shall provide the City and all Additional Insureds for this work with written notice of any policy cancellation within two business days of their receipt of such notice.

m. Failure to Maintain Insurance

Failure on the part of the Developer to maintain the insurance as required shall constitute a material breach of contract, upon which the City may, after giving five business days' notice to the Developer to correct the breach, immediately terminate the contract or, at its discretion, procure or renew such insurance and pay any and all premiums in connection therewith, with any sums so expended to be repaid to the City on demand.

6. In the event the Developer in his operation damages or disrupts existing improvements, the repairs shall be made at the Developer's expense. In the event they are so damaged or the service disrupted and the Developer fails or is unable to immediately restore the service, then the Owners of the improvements may cause the repairs to be made by others and all costs for the same shall be at the Developer's own expense.

Where the construction crosses or is adjacent to existing utilities, the Developer shall exercise extreme care to protect such utilities from damage.

If any damage is done to an existing utility, the Developer shall notify the utility company involved, who will dispatch a crew to repair the damage at the Developer's expense. All costs for the same shall be at the Developer's own expense.

The Developer shall be aware that some existing City owned facilities are known to contain asbestos cement pipe. The Developer shall conduct all work related to existing asbestos cement pipe in strict accordance with current WISHA safety regulations and provisions contained within WAC 296-62-077. All costs related to work in compliance with established rules and regulations shall be the responsibility of the Developer. Demolition of existing asbestos cement pipe, if required, will be permitted only after the proper permits are obtained from the Puget Sound Air Pollution Control Agency. The Developer shall be responsible for all associated fees and permits required for asbestos removal and disposal. Work crews shall be provided with proper protective clothing and equipment. Hand tools shall be used, and the asbestos cement pipe shall be scored and broken in lieu of the sawing or other methods, which release fibers into the atmosphere. Waste asbestos pipe shall be buried in the trench. Asbestos pipe to be abandoned in place shall not be disturbed, except as noted herein, and shall remain in its original position.

The Developer is cautioned that all existing drainage systems, whether open ditch, buried pipe, or drainage structures, are not on record. It shall be the responsibility of the Developer to repair or replace all such systems found during construction, which are damaged by the Developer's construction in a manner, which is satisfactory to the City.

Where the Developer is allowed to use private property adjacent to the work, the property so used shall be returned to its original or superior condition. The Developer shall make all arrangements in advance with such property owners, to ensure that no conflicts will ensue after the property is restored as described above. The Developer will be required to furnish the City with a written release from said private property owners, if the City deems it to be necessary to obtain such document.

7. The construction of the Developer's proposed improvements, or additions thereto, on the Premises shall be supervised by the City in such a manner and at such times as the City deems reasonably necessary to assure that construction of the system will conform with the above-mentioned plans and specifications and minimum City Standards. The Developer herewith agrees to allow such inspections and agrees to cooperate providing reasonable advance notice on his construction schedule during the various construction phases as requested by the City. The Developer further agrees to reimburse the City for all engineering fees and expenses incurred by the City for such supervision.

8. The Developer’s proposed improvements, or additions thereto, on Premises shall not be accepted for service and use until the same have been fully inspected and approved, and the following requirements have been performed:

   a. Submit to the City in Auto-CADD format, latest revision, the computer file supplied on a compact disc (CD) accompanied by the original "fixed line" mylars, with all changes from the original design clearly marked to reflect the as-built conditions. The Developer's Engineer shall certify the accuracy of the record drawings and shall affix his seal and signature.

   b. Payment of all permit fees and equivalent assessment charges and any other applicable City charges required for Premises.

   c. Payment of all plan check and inspection fees and related fees.

   d. Prepare and furnish the required easements in accordance with City's standard form, and furnish same to the City for approval by the City Attorney, along with the necessary recording fees.

   e. Furnish the City with an affidavit warranting there are no liens against the improvements constructed on Premises by the Developers, this affidavit shall be in the form prescribed by the City.

   f. Furnish the City with a Bill of Sale conveying the water/sanitary/storm or roadway system to the City, which shall include a two-year guarantee that the conveyed systems or improvements or additions thereto shall be free of defects in labor and materials. Form shall be as prescribed by the City.

   g. Payment of all applicable bills, invoices, fees, etc., have been paid in full.

9. In the event any warranty repairs are required, the City agrees, whenever feasible, to provide the Developer with reasonable notice before directly undertaking such repairs. The City reserves the right, however, to effect emergency repairs as deemed necessary by the City. The City shall be reimbursed by the Developer for all costs thereof.

10. Upon performing all requirements, including those as set forth in Paragraph 5 above, the City shall accept the water/sanitary/storm or roadway improvements, and agree therewith to operate and maintain said system.

SUBMITTED this ____ day of _____, 20___.

BY DEVELOPER: _____
Printed Name

_____
Signature

_____
Date

State of Washington )
) ss.
County of Snohomish )

On this _____ day of _____, 20_____, before, me the undersigned, a Notary Public in and for the State of Washington, duly commissioned and sworn, personally appeared _____, to me known to be the person who executed the foregoing instrument, and acknowledged the said instrument to be his free and voluntary act and deed, for the uses and purposes therein mentioned, and acknowledged that he/she had the legal authority to execute said agreement on behalf of the "Developer".

WITNESS my hand and official seal affixed the day and year first above written.

_____
Notary Public in and for the State of Washington, residing at _____

(INDIVIDUAL)

**CITY OF GRANITE FALLS**

**DEVELOPER AGREEMENT**

**EXHIBIT "A"**

PLAT NAME: _____

DEVELOPER: _____

LEGAL DESCRIPTION:_____

_____

_____

_____

_____

_____

_____

_____

_____

_____

# *CITY OF GRANITE FALLS*
# Plan Review Checklist

NAME/NUMBER OF PROJECT _____

DATE SUBMITTED _____

The following represents most, if not all, of the plans, drawings, reports, calculations, etc., that could be required for your project. In many cases, you will be required to submit only a portion of these. You should consult with the City staff prior to starting the engineering design of the project and verify what is required. Sheets should be ordered and numbered as presented herein.

☐ General submittal requirements:

- Plans submitted for approval must not be stamped as “preliminary” or “not for construction”.
- All plan sets must have a title/cover sheet.
- All sheets must be signed and dated.
- All sheets must have an “Approved for Construction” signature block in upper/lower right corner.

APPROVED FOR CONSTRUCTION

BY:_____DATE:_____

CITY OF GRANITE FALLS

These drawings are approved for five years from date of approval. The City reserves the right to make revisions, additions, deletions or modifications should construction be delayed beyond this time limitation. Minor Field changes may be required by the City based upon site conditions. The City, by approving these drawings, assumes no liability in regards to their accuracy or omissions.

- All plan sheets must have North Arrow and Scale Bar.
- Scale:
  - Plan view – 1"=50', but 1"=20' preferable
  - Profile view - 1"=20' horizontally and 1"=5' vertically
  - Overall or section cover page – variable, but 1"=100' preferable
- All sheets shall be maximum 22" x 34". Half-size (11" x 17") plan sets shall be made available prior to start of construction. Provide a minimum of four (4) full-size copies of the plans for each submittal.
- Final approved drawings shall be on mylar and given to the City for signature.
- All sheets must have a title block on the bottom or right edge. Title block should include:
  - Company Name and Contact Information
  - Revision Block including the following:
    - Revision Number
    - Date
    - Description of Revision
    - Made By/Checked By
  - Project Information Block – This block contains text noting scale, drawing name, drafter/designer initials, and approving engineer’s initials
  - Engineers seal

- Scale
- Sheet title, including:
  - Sheet title, project name, city project number

☐ Title/cover Sheet:
- Project name
- Title of plans (e.g., "Road and Storm Drainage Improvements")
- Section, Township, and Range
- "City of Granite Falls, Snohomish County, Washington"
- City Project number
- Date of Original Plans
- Revision dates
- Owner's (developer's) name, address, and phone
- Engineer's name, address, and phone
- Approval block (positioned in lower right corner)

☐ Notes, Index, Conditions Sheets:
- Conditions of approval (beginning at top left)
- Vicinity Map (Granite Falls) – not to scale
- Soils Map – not to scale
- Listing of all pertinent utility companies, phone
- Contact information for all involved owners, trustees, surveyors, and engineers (civil, geotechnical, structural)
- "Recommended for Approval" block
- "Approved for Construction" block (lower right corner)
- Index of all sheets with sheet numbers and titles
- Legend including abbreviations and symbols (APWA Standard Symbols)

☐ Overall Survey Control Sheet - (No approval block required)
- This <u>single</u> sheet should show entire project and surrounding areas
- Indicate graphically and by written text the basis for the survey control including:
  - Basis of position – showing street breakdown
  - Basis of bearing – showing boundary dimensions and bearings
  - Horizontal datum (NAD 83/91) and vertical datum (1988 NAVD) (bench mark elevation and location),
  - Monumentation – found and set
- Features of the sheet that should be identified and labeled by the following text:
  - Lots – numbers
  - Tracts – letters
  - Easements – dashed lines with labels
  - Adjacent parcel/right-of-way lines – dashed lines with parcel numbers
  - Adjacent parcels names
  - Street names – as approved by the City

☐ Individual Survey Control/Calculation Sheets:

- For smaller projects, information can be included on the Overall Survey Control Sheet
- Bearing, length and curve data (including delta, radii, length) for right-of-way centerlines
- Right-of-way width
- Stationing set at 100-foot increments, with tick marks at 50 feet
- Street names, street classifications, lot numbers
- Square Footage (or acreage) of tracts
- Each lot, tract, and easement boundary should be labeled with its length and bearing.
- Each tract should have its purpose noted (i.e. public/private; park, landscape, etc.).
- Each tract should have its boundary and buffer clearly labeled.
- Adjacent parcel names
- Curb return control data with gutter elevations should be provided on sheet(s) separate from other survey control sheets. (begin/end curb return – BCR/ECR)
- Monument locations (existing and proposed)

☐ Overall Temporary Erosion and Sediment Control Sheet:

- Entire site showing ESC sheet breakdown
- Sensitive areas and associated buffers
- All tracts and parcels (including adjacent properties)
- TESC features are not required on this sheet.

☐ Individual Temporary Erosion and Sediment Control Sheets:

- Scale, legend, parcel lines, lot numbers, street names
- Standard Erosion and Sedimentation Control Notes
- Existing and finished grade contours. The existing contours should be screened.
- Sensitive areas and their associated buffers
- Surface runoff flow direction noted by flow arrows
- Run-on from upstream properties
- Show all TESC measures. These should include, but are not limited to:
  - Clearing limits
  - Cover measures (temporary and permanent)
  - Perimeter protection
  - Traffic area stabilization
  - Sediment retention (ponds, traps, riser and outlet details)
  - Surface water control (temporary piping, conveyance ditches, interceptor swales, temporary outfalls)
  - Significant features (i.e. rock walls, retaining walls)
  - Un-contained areas
  - Drainage basin boundaries for each discharge
  - Other BMPs
  - Sediment retention sizing calculations (also included in SWPPP)

☐ Overall Clearing and Grading Sheet:
- Entire site showing sheet breakdown
- Sensitive areas and associated buffers
- All tracts and parcels (including adjacent properties)
- Clearing and grading features do not need to be shown on this sheet.

☐ Individual Clearing and Grading Sheets:
- Scale, legend, parcel lines, lot numbers, street names, construction easements
- Existing contours (minor – 2', major – 10') screened or shaded
- Proposed contours (minor – 2', major – 10')
- Plan view:
  - Existing and proposed contours (existing contours screened back)
  - Sensitive areas and associated buffers
  - All other significant topographic features
  - Walls, type with top and bottom elevation labeled (Note indicating a separate building permit required for walls)
- Profile/cross sections (specific locations as required by City
  - Existing and proposed contours (existing contours screened back)

☐ Stormwater Site Plan / Stormwater Pollution Prevention Plan:
- As specified in 2005 DOE Stormwater Management Manual for Western Washington
- Text must clearly describe assumptions, means of compliance, etc.,
- Report must include drawings of the facilities, including details
- All critical data on computer sheets should be identified to assist reviewer
- Stormwater Site Plan must be as-built at end of project to indicate constructed facility performance

☐ Geotechnical Report:
- Must be reviewed by geotechnical consultant
- Pavement design
- Structural assumptions for walls and vaults
- Site hazards and stability issues (existing or proposed)
- Erosion and Sedimentation Control
- Structural fill
- Groundwater
- Geotechnical Engineer-of-Record must stay with project through construction per UBC, Chapter Appendix 33

☐ Storm Drainage Overall Plan Index Sheet:
- Entire site showing SD sheet breakdown
- All storm utilities shown (no details)
- All ponds, lots, streets, and tracts labeled

☐ Overall Road and Storm Drainage Plan Sheets:

- Entire site with existing and proposed contours
- Storm components shown and labeled (number and type)
- All ponds, lots, streets, and tracts labeled

☐ Individual Road and Storm Drainage Plan and Profile Sheets:

- Each sheet must show plan view with roadway or drainpipe centerline profile below
- Connection to existing improvements (separate sheets)
- Plan view must show:
  - All parcels, lots, and tracts labeled
  - Clearing limits
  - Existing and proposed contours (minor – 2’, major – 10’) 50’ beyond site
  - Stationing
  - Easements, width and type
  - Sensitive areas and associated buffers
  - Walls (see GP sheets for type and elevations)
  - Call-outs to other sheets for details and match lines
  - Roadway features identified in plan view (with symbols, text where needed):
    - Street names and classification
    - Right-of-way and pavement width boundary
    - Curb and gutter (driveway curb cuts, if known)
    - Sidewalks, ramps, trails, walkways
    - Flow direction arrows at curb returns
    - Driveway approaches, width
    - Mailbox locations
    - Utility structure locations
    - Traffic calming features
    - Major pavement markings (crosswalks, textured pavements)
    - Pavement type (concrete, gravel, asphalt)
    - High/low point
    - Fences, guardrail, or handrails
    - Pavement tapers, transitions

  - Storm drainage features identified in plan view (with symbols, text where needed):
    - Catch basins, inlets, manholes - number and type
    - Pipe length, size, type, flow direction, and slope
    - Outfalls
    - Outline of underground facilities
    - Special storm components (arched culverts, dispersal trench, outfalls, weirs, headwalls, etc.,)
    - Wall and yard drain stub invert elevations
    - Individual downspout stub invert elevations
    - Flow direction arrows

- Call-outs to other sheets for details
- Facility (pond, vault, sand filter, etc.,) name/number
- Facility features (general on this sheet) – access roads, manholes, pipes, inlets and outlets, spillways, 100-year (design) water surface elevation, water quality water surface elevation, bottom elevation

- Profile view must show:
  - Existing and proposed grade elevations at road/drainpipe centerline
  - Street name and classification
  - Stationing
  - Slope (%)
  - Station equations at intersections
  - Vertical curve data:
    - Length, low/high point and station, PVI station and elevation, algebraic difference, K Value
    - PVC, PRC, and PVT – station and elevation
    - Street classification, design speed, required stopping sight distance, superelevation
  - Utilities – size and type labeled
  - Storm system in profile view:
    - Length, size, type, and slope of each pipe/feature
    - Structure number, station, offset, rim elevation, invert elevations including IN/OUT, pipe diameters, pipe materials
    - Underground vaults, ponds, tanks with elevations, inverts
    - Callouts to detail sheets

☐ Stormwater Facility (ponds, vaults, or tanks) Sheets:
- Plan view (No plan view required for tanks):
  - Existing and finished grade contours
  - Easement and tract boundaries
  - Sensitive areas and their associated buffers
  - Access roads, ramps, walls, and buildings
  - Identify cells and dividing berms or baffle walls (vaults)
  - Bottom, top of dead storage, water quality surface, 100-year water surface, berm, spillway, and pipe invert elevations
  - Access hatches, manholes, and risers (vaults)
  - Dimensions, slope, curvature, and materials for access roads, trails, spillway
  - Interior dimensions (vaults)
  - Structures – name, type, size, rim and invert elevations or callouts to detail sheets
  - Pipes – length, type, size, slope, inverts
  - Walls – type, top and bottom elevation
  - Outfalls – size, material, energy dissipation
  - Signage, fences, gates, bollards

- Special notes regarding geotechnical details for berm construction, etc.,
- A table providing the following information:
  - Facility type and name
  - Required live storage volume
  - Design live storage volume
  - 100-year (design) water surface elevation
  - Overflow water surface elevation
  - Emergency overflow water surface elevation
  - Berm or inside top of vault elevation
  - Required dead storage volume (WQ)
  - Design dead storage volume (WQ)
  - Top of dead water surface (WQ)
  - Sediment storage elevation
  - Bottom elevation

- Profile/Cross sections
  - Include minimum 2 sections per facility
  - Scale exaggeration 10:1 ratio maximum
  - Sections should go well beyond the limits of the facility to include adjacent walls, roads, etc.,
  - Existing and finished grade contours
  - Berm elevation and width
  - Inside top of vault elevation (vaults)
  - Interior dimensions (vaults)
  - Foundation, walls, and lid must be shown to scale on vaults with callout to structural plans and details (vaults)
  - Wall penetrations (vaults)
  - Slopes (horizontal:vertical)
  - Tract/easement boundaries
  - Sensitive areas and associated buffers
  - Call-outs to details
  - Label:
    - Bottom elevation
    - Sediment storage depth
    - Top of dead water surface (WQ)
    - 100-year (design) water surface elevation
    - Overflow water surface elevation
    - Emergency overflow water surface elevation
    - Pipe type, size, length, slope, inverts
    - Structure name, rim elevation, invert elevations
    - Special features (drains, beveled outfalls, spall pads, valves, sleeves, etc.,)

- Individual control structure detail sheets:
  - Call-outs to details
  - Plan view indicating (drawn to scale):
    - Northing/easting OR angle between pipes
    - Ladder and clearances
    - Cleanouts, elbow restrictors, and risers
    - Knockout diameter
    - Platforms
  - Profile view indicating (drawn to scale):
    - Bottom, rim, platform elevations
    - 100-year (design) water surface elevation
    - Overflow water surface elevation
    - Emergency overflow water surface elevation
    - Cleanouts, elbow restrictors, and risers
    - Restrictor elbow invert, diameter
    - Orifice elevation, diameter
    - Pipe inverts and sizes
    - Ladder steps

☐ Sanitary Sewer Overall Plan Index Sheet:
- Entire site showing SS sheet breakdown
- All Sanitary utilities shown (no details)
- All ponds, lots, streets, and tracts labeled

☐ Overall Road and Sanitary Sewer Plan Sheets:
- Entire site with existing and proposed contours
- Sanitary Sewer components shown and labeled (number and type)
- All ponds, lots, streets, and tracts labeled

☐ Individual Road and Sanitary Sewer Plan and Profile Sheets:
- Each sheet must show plan view with roadway or pipe centerline profile below
- Connection to existing improvements (separate sheets)
- Plan view must show:
  - All parcels, lots, and tracts labeled
  - Clearing limits
  - Existing and proposed contours (minor – 2’, major – 10’) 50’ beyond site
  - Stationing
  - Easements, width and type
  - Sensitive areas and associated buffers
  - Walls (see GP sheets for type and elevations)
  - Call-outs to other sheets for details and match lines
  - Roadway features identified in plan view (with symbols, text where needed):
    - Street names and classification

- Right-of-way and pavement width boundary
- Curb and gutter (driveway curb cuts, if known)
- Sidewalks, ramps, trails, walkways
- Driveway approaches, width
- Mailbox locations
- Utility structure locations
- Traffic calming features
- Major pavement markings (crosswalks, textured pavements)
- Pavement type (concrete, gravel, asphalt)
- High/low point
- Fences, guardrail, or handrails
- Pavement tapers, transitions

- Sanitary Sewer features identified in plan view (with symbols, text where needed):
  - Manholes - number and type
  - Pipe length, size, type, flow direction, and slope
  - Connection to existing system
  - Individual side sewer stub invert elevations
  - Call-outs to other sheets for details

- Profile view must show:
  - Existing and proposed grade elevations at road/pipe centerline
  - Street name and classification
  - Stationing
  - Slope (%)
  - Station equations at intersections
  - Vertical curve data:
    - Length, low/high point and station, PVI station and elevation, algebraic difference, K Value
    - PVC, PRC, and PVT – station and elevation
    - Street classification, design speed, required stopping sight distance, super-elevation
  - Utilities – size and type labeled
  - Sanitary system in profile view:
    - Length, size, type, and slope of each pipe/feature
    - Structure number, station, offset, rim elevation, invert elevations including IN/OUT, pipe diameters, pipe materials
    - Callouts to detail sheets

☐ Water Overall Plan Index Sheet:
- Entire site showing SS sheet breakdown
- All Water utilities shown (no details)
- All ponds, lots, streets, and tracts labeled

☐ Overall Road and Water Plan Sheets:

- Entire site with existing and proposed contours
- Water components shown and labeled (number and type)
- All ponds, lots, streets, and tracts labeled

☐ Individual Road and Water Plan and Profile Sheets:

- Each sheet must show plan view with roadway or pipe centerline profile below
- Connection to existing improvements (separate sheets)
- Plan view must show:
  - All parcels, lots, and tracts labeled
  - Clearing limits
  - Existing and proposed contours (minor – 2’, major – 10’) 50’ beyond site
  - Stationing
  - Easements, width and type
  - Sensitive areas and associated buffers
  - Walls (see GP sheets for type and elevations)
  - Call-outs to other sheets for details and match lines
  - Roadway features identified in plan view (with symbols, text where needed):
    - Street names and classification
    - Right-of-way and pavement width boundary
    - Curb and gutter (driveway curb cuts, if known)
    - Sidewalks, ramps, trails, walkways
    - Driveway approaches, width
    - Mailbox locations
    - Utility structure locations
    - Traffic calming features
    - Major pavement markings (crosswalks, textured pavements)
    - Pavement type (concrete, gravel, asphalt)
    - High/low point
    - Fences, guardrail, or handrails
    - Pavement tapers, transitions

  - Water features identified in plan view (with symbols, text where needed):
    - Meters, valves, hydrants, backflow prevention,
    - Pipe length, size, type
    - Connection to existing system
    - Individual service connections with elevations
    - Call-outs to other sheets for details

- Profile view must show:
  - Existing and proposed grade elevations at road/pipe centerline
  - Street name and classification

- Stationing
- Slope (%)
- Station equations at intersections
- Vertical curve data:
  - Length, low/high point and station, PVI station and elevation, algebraic difference, K Value
  - PVC, PRC, and PVT – station and elevation
  - Street classification, design speed, required stopping sight distance, super-elevation
- Utilities – size and type labeled
- Water system in profile view:
  - Length, size, type, and slope of each pipe/feature
  - Structure number, station, offset, elevation, pipe diameters, pipe materials
  - Callouts to detail sheets

☐ Structural Sheets:

- Structural calculations, with supporting geotechnical data and assumptions
- Structural drawings showing elevations, walls, bottom/top slabs, re-steel, ties, water stops, foundation material, backfill, perimeter drains, penetrations, etc.

☐ Road and Storm <u>Detail</u> Sheets:

- Road details:
  - Typical road cross-sections full-width of right-of-way including surfacing (wearing course, top course, base course, and subgrade preparation)
  - Trail surfacing and subgrade preparation, steps, bridges, etc.,
  - Curb and gutter
  - Sidewalks, stairways
  - Driveway approaches
  - Wheelchair ramps
  - Transitions
  - Fences, guardrails, handrails
  - Geotechnical notes and sections, where required
  - Street tree planting notes and details
  - Mailbox assemblies including sidewalk widening
  - General roadway construction notes
  - Monuments
  - Patch details

- Storm drainage details:
  - Catch basin, inlets, and manholes
  - Frame and grate/ring and lid
  - Details indicating structure orientation beneath curbs
  - Stormwater facility access roads

- Roof drain laterals connection to public storm system
- Spillway
- Infiltration/dispersal trenches
- Removable and fixed bollards
- FROP-T flow restrictor/spill control device, including shear gate
- Elbow restrictor
- Ladders and steps
- "Jailhouse window"
- Access risers
- Signs (pond, wetland, wildlife, confined space entry, etc.,)
- Overflow structure ("birdcage")
- General drainage notes
- Planting notes
- Geotechnical notes for pond berm construction
- Trench detail

☐ Non-Motorized Circulation Plan, when required:
- Plan view of entire project site designating all non-motorized traffic routes
- Legend, sign details and locations

☐ Traffic Signing Plan:
- Plan view of entire project with sign type, locations, size

☐ Channelization and Pavement Marking Plan:
- Plan view of project with striping shown. Indicate location, width, color, type, etc.,
- Crosswalk, handicap stalls, etc., details

☐ Traffic Calming Plan:
- Plan view of project with calming measures shown
- Traffic calming details (traffic circle, speed humps, etc.,)

☐ Illumination Plan:
- Prepared by Snohomish County PUD
- Location of poles
- Calculations

☐ Landscaping and Irrigation Plans:
- Prepared in accordance with the City Planning Commission

☐ Wetland Mitigation Plan (WM):
- Prepared in accordance with Department of Community Development

☐ Reference Sheets (R):

- Off-site grading and drainage improvements including transitions and connections to existing roads and drainage features
- Any relevant sheets adding to the general understanding of the project

# CITY OF GRANITE FALLS

## TRAFFIC IMPACT ANALYSIS GUIDELINES

The following are general guidelines for use in the submittal of a traffic impact analysis to the City of Granite Falls. Specific locations to be included in the analysis, boundaries of the study area, etc., will be determined by the City of Granite Falls as part of the application process. The applicant shall meet with the City Public Works Superintendent or City Engineer to determine the need for a traffic study and items to be included. Modifications to the attached guidelines may be incorporated at such time.

Typically, the threshold for determining whether a traffic impact analysis is required will be 10 peak hour trips (inbound and outbound) and/or 100 daily trips. This would include those developments in the rough range of 10 or more single-family residences, 14 or more apartments, or 4,000 square feet of office space, for example. Additionally, a traffic analysis may be required by the City engineer for a development smaller than threshold above. Trip generation and traffic volumes will be measured in Passenger Car Equivalents (PCE). Vehicles with five (5) or more axles shall be assessed a PCE of four (4). For example twenty daily trips with a six-axle vehicle shall be assumed to contribute eighty daily trips for the purposes of assessing the traffic analysis threshold. Passenger Car Equivalents of other vehicles will be calculated in accordance with the ITE Trip Generation Manual and/or the Highway Capacity Manual and require approval of the City Engineer.

Trip generation shall be based on the current edition of the ITE Trip Generation Manual using the average trip rate. The regression equations will be used when average trip rates are not available. Trip generation for unusual land uses which are not found in the Trip Generation Manual shall be estimated from similar types of uses, field studies of similar uses, or based on number of employees, deliveries, expected clientele, etc., as appropriate. Discussion with the City of Granite Falls with respect to this issue can be included in the application screening process.

Level of service calculations shall be conducted using methodologies presented in the current edition of the Highway Capacity Manual. Level of service for signalized and unsignalized intersections should be expressed in terms of stopped delay per vehicle. Worksheets/computer print-outs of the capacity analyses should be included with the traffic impact analysis.

Level of service calculations will typically be required at the major intersections (signalized locations or major stop sign locations) which will be impacted by 25 or more total peak hour trips from the proposed development.

The City of Granite Falls considers level of service “D” to be acceptable. Appropriate mitigation should be proposed to maintain this level of service upon completion of the

development. Exceptions to level of service “D” will be considered by the City at those locations where the potential mitigation (such as a traffic signal) is not reasonable or desirable. Typically, mitigation will be based on a fair-share or proportionate basis. Exceptions to this will be along the frontage of the development and for any improvements at the development’s access(es) (such as turn storage lanes, channelization, etc.) which will be entirely the responsibility of the development.

Peak hour turning movement counts shall be conducted as part of the analysis for those locations, which will be analyzed with respect to level of service. The Consultant may use counts conducted by or available from the City if less than 12 months old. Appropriate growth factors and/or inclusion of pipeline projects shall be used for projecting future volumes on roadways or at intersections for the project’s horizon year. Special conditions such as project phasing or inclusion of adjacent projects may require additional analysis.

The traffic impact analysis shall be prepared under the direction of an active member of the Institute of Transportation Engineers (ITE).

## TRAFFIC IMPACT ANALYSIS OUTLINE

The following describes a general outline for use in the preparation of traffic impact analyses for the City of Granite Falls. This outline is not intended to be all inclusive nor will all items be applicable for all types of development. The City of Granite Falls reserves the right to request additional information for unique or unusual developments.

### I. INTRODUCTION/PROJECT DESCRIPTION

Elements to be included as part of narrative or as figure(s).

- Project name and proponent - Location of project
- Vicinity map
- Proposed uses, if known (e.g., names of stores)
- Project magnitude (square footage, number of units, etc.)
- Access locations
- Current and proposed zoning
- Description of current use of property
- Reduced copy of site plan (if available)
- Roadways/intersections to be impacted and reviewed in the analysis
- Horizon year of project (completion and occupancy); state phasing and time-frame if applicable
- Parking (if applicable)

### II. INVENTORY OF EXISTING CONDITIONS

Elements to be included as part of narrative or as figure(s).

- Description of impacted streets in the area (number of lanes, width, pedestrian facilities, speed limit, lighting, etc.)
- Daily traffic volumes (if available), or estimated from peak hour counts
- Peak hour counts (as appropriate)
- Accident history (when required by the City)
- Capacity analyses at critical intersections
- Transit service

### III. DEVELOPMENT IMPACTS

Elements to be included as part of narrative or as figure(s).

- Trip generation
- Trip distribution/assignment
- Capacity analyses (with and without the project) at critical locations for the horizon year
- Projected daily traffic volumes and peak hour volumes (with and without the project) for the horizon year

- Need for turn storage lanes at access(es) (if appropriate)
- Other concerns (if applicable, such as cut-through traffic in residential areas)

## IV. CONCLUSIONS/RECOMMENDATIONS

- Brief summary of above analyses with recommendations

## V. MITIGATION

- Mitigation shall be in accordance with Granite Falls Municipal Code, Granite Falls Comprehensive Plan, State Law and interlocal agreements.

## VI. OTHER

- Unusual developments may require analysis of off- peak hours, the AM peak hour, weekends, or ability to serve large trucks, for example, if deemed necessary by the City of Granite Falls. Studies performed as part of an EIS document may also require additional analysis.

Three copies of the traffic impact analysis shall be submitted to the City of Granite Falls.

The following two forms related to traffic impact analysis and mitigation offers are available on the web at the following address:

http://www.snohomishcountywa.gov/917/Reciprocal-Agreements

1. County Traffic Study Requirements for Developments in Granite Falls.pdf
2. City of Granite Falls Traffic Study Requirements for Development in County.pdf

# Snohomish County Traffic Worksheet and Traffic Study Requirements for Developments in the City of Granite Falls

Snohomish County government, through an interlocal agreement (ILA) with the City of Granite Falls, may request traffic mitigation measures from any new development in the city that impacts roads in the unincorporated county. The City will impose the requested mitigation to the extent that the City determines that the mitigation is reasonably related to the impacts of the development. To determine the impacts, and to determine reasonable mitigation measures, the City of Granite Falls requires a traffic study from any development in the city that may have impacts on county roads. This 'traffic study' may be as simple as completing sections one and two of the county traffic worksheet below, or having a professional traffic engineer conduct a formal traffic study consistent with the requirements in section three below.

- If a development generates less than ten peak-hour trips and the applicant chooses Option A for mitigation payment (standard payment by percent of county impact fee), then the applicant will generally only have to fill out the first two sections of this traffic worksheet and complete a mitigation offer (see section four).
- However, if a development generates more than ten peak-hour trips, or if the applicant chooses Option B for mitigation payment (comprehensive impact analysis), then the applicant will have to fill out the first section of this worksheet, complete a separate traffic study consistent with the requirements in section three, and complete a mitigation offer (see Section Four).
- Applicants should submit all documents *to the City* as part of their initial submittal.
- Traffic study requirements for impacts on county roads are based on the County's traffic mitigation ordinance (Chapter 30.66B) and the city/county ILA. At the end of this document find references to the county contacts and county web site (sources for may of the documents related to traffic mitigation).
- Following review of the documents submitted, the County may request supplemental information and analysis as necessary to determine the impacts of the development in accordance with the city/county ILA. The City will require the proposed development to submit the supplemental information and analysis to the extent that the City determines that it is necessary to determine the impacts of the development.

## Section One (1) Worksheet General Information

1. Name of Proposed Development _____

   City Development File Number (if known)_____

2. Name, Address and Phone Number of Applicant_____

   _____

   _____

3. Development Site Address_____

   _____

4. Is it a residential or commercial development?_____

5. Description of Development (size and specific type)_____

   _____

6. How many new vehicle trips are expected to be generated by the proposed development? (For many common types of developments this information can be provided by the city or the county. For more complex developments trip generation may have to be determined under section three below)

   _____ AM Peak Hour_____ PM Peak Hour_____ Average Daily Trips (ADT)

7. Proportionate Share Impact Mitigation: All applicants have two options in determining the amount of their traffic mitigation payment:

   _____ For determining the amount based on a percentage of the county fee go to section two.

   _____ For determining the amount based on a comprehensive traffic study go to section three.

## Section Two (2) Proportionate Share Determined by Percentage of County Impact Fee

### 2(a) Calculation of Payment Amount

1. Standard default estimated percentage of trips impacting county roads 60 %

or

2. Other Percentage: (Note: See author's qualifications in section three below.) Estimated percentage of trips impacting county roads from attached trip distribution: _____ %

3. Development New Average Daily Trip Generation (ADT)_____

4. Type of Development (Residential or Commercial)_____

5. County Commercial Fee Rate $_____ 6. County Residential Fee Rate $_____

(Note: Consistent with county code and the ILA, developments pay the rate in effect at the time of their submittal. As of 2/1/06 the rates were $309 for commercial developments and $364 for residential developments. Through ordinance, the County Council can change these rates at any time, so consult with the County or look at Snohomish County Code 30.66B.330 to find the latest fee rates.)

7. Calculation of Proportionate Share Impact Mitigation

| _____ | × | _____ | × | _____ | = | $_____ |
|---|---|---|---|---|---|---|
| #1 or #2 above: % of trips | | #3 above: ADT | | #5 or #6 above: Fee Rate | | proportionate share mitigating payment |

### 2(b) Determining whether or not an additional traffic study is necessary

Will the development generate more than 10 peak-hour trips *or* are there other impacts that need to be addressed (e.g., level of service, safety, or access and circulation)

_____ No. Skip section three and go to section four.

_____ Yes. Read the introduction to section three and skip to section 3(b).

## Section Three (3) Traffic Study Requirements

Introduction: This section outlines requirements for traffic studies for impacts on County roads. If an applicant chooses (or is required) to complete a traffic study, then it should be submitted along with this worksheet and a mitigation offer. (Note on Author's Qualifications: A traffic study under this section must be conducted by an engineer licensed to practice in the state of Washington with special training and experience in traffic engineering and, preferably, membership in the institute of transportation engineers. For individuals/firms not on the City's approved list, the developer will provide, with the traffic study, the credentials of the individual or firm performing the traffic study certifying compliance with these qualifications.)

### 3(a) Proportionate share impact mitigation based on comprehensive traffic study

1. Development's Trip Generation and Distribution. Determine the PM peak-hour trip generation and distribution for the development consistent with Section 3(b) below.
2. Impacted Improvements. Determine which of the road sections with planned improvements in the county's impact fee cost basis (Transportation Needs Report Appendix D) are impacted by three or more development-generated *directional* PM peak hour trips (PM PHT).
3. Current Counts. For each impacted improvement, provide current traffic counts to determine the PM PHT.
4. Reserve Capacity. Determine "reserve capacity" for each impacted improvement by subtracting the current PM PHT from the maximum service volume (MSV) for the existing facility. Reserve capacity is set to zero if current PM PHT exceeds the MSV. For MSVs see County DPW Rule 4224.
5. New Capacity. New capacity is the incremental increase in PHT that could be accommodated with the planned improvement. Determine the new capacity of each impacted improvement by subtracting the current MSV from the future MSV after the improvement.
6. Chargeable Capacity. For each impacted improvement, add the reserve capacity to the new capacity.
7. Final Adjusted Cost. Find the cost of each impacted improvement and make any adjustments used by the County for tax credits (see Transportation Needs Report Appendix D).
8. Capacity Cost per Peak-Hour Trip. For each impacted improvement, determine the capacity cost per PM PHT by dividing the final adjusted improvement cost by the chargeable capacity.
9. Traffic Impacts. From step one above, take the *total* number of PM PHT (in both directions) impacting each planned improvement.
10. Proportionate Share. For each impacted improvement, determine the proportionate share impact mitigation by multiplying the capacity cost per peak-hour trip by the number of PM PHT impacting the improvement.

### 3(b) Trip Generation and AM and PM Peak Hour Trip Distribution and Assignment

Calculate AM, PM and Daily trip generation consistent with the ITE Trip Generation Handbook and Snohomish County Public Works Rule 4220. Determine the trip distribution and assignments consistent with the County's document titled "Format for Trip Distributions"(available at County web site, see below).

- Within the developments transportation service area (TSA) the distributions will be carried out to each key intersection at which the approach or departure volumes on any leg have three (3) or more peak hour trips. Get the most current list of key intersections on the web site described below. Trips should be distributed onto the road system as it is expected to be in six years.
- The distribution should be a schematic map showing the broad distributions of trips in terms of percentages on different roads. Show all City boundaries.
- The assignment should be a schematic map with the impacted key intersections identified by ID# and turning movements for each shown in separate diagrams on the same page or on different pages. The assignment should also be presented in tabular form listing each intersection by intersection ID#, and the number of trips at each movement.

### 3(c) Additional Analysis for Developments Generating More Than Fifty (50) Peak Hour Trips

For large developments (i.e., those generating more than 50 peak-hour trips), the County may request mitigation for impacts on the level of service of County roads, documented safety locations (the County calls such locations "inadequate road conditions" or "IRCs"), and access or circulation. The traffic study requirements below are intended to disclose impacts. Based on this information the County may request through the City that the applicant provide additional information showing possible mitigation measures. If any off-site improvements were needed for mitigation the County would work with the applicant to determine requirements for right-of-way, construction plans, right-of-way use permits, construction/maintenance bonds, and other issues.

**Impacts on Level of Service (LOS) of County Arterials**

Contact Snohomish County Public Works for the most current list of arterial units in arrears and critical arterial units. Identify any arterial units in arrears or critical arterial units impacted by three or more directional peak-hour trips.

**Impacts on Inadequate Road Conditions**

Contact Snohomish County Public Works for a list of the current IRCs. Identify any IRCs impacted by three or more peak-hour trips. Note: Unlike LOS impacts in which at least three or more peak hour trips have to be added in one direction to require disclosure (e.g., 3 westbound), for IRCs, any three peak hour trips added to IRC locations are considered an impact for which disclosure is necessary (e.g., 2 westbound plus 1 eastbound).

**Impacts on Access or Circulation**

The County may request improvements to existing roads to provide safe and efficient access and/or circulation. In some instances, the County may request provisions for future County roads identified in the Comprehensive Plan or in Small Area Transportation Studies. If so, the County will request specific additional information through the City.

## Section Four (4) Traffic Mitigation Offer to Snohomish County

The applicant should complete a traffic mitigation offer to Snohomish County that summarizes the mitigation identified in the county traffic worksheet and any additional traffic study. This will facilitate timely review of the development and processing of the application. The form to use for the mitigation offer is titled "Traffic Mitigation Offer to Snohomish County." This form is typically provided to all applicants along with this traffic study checklist. In addition, copies are available from the county contacts or the Snohomish County web site shown below.

## Additional Information

County Web Site

Snohomish County Public Works has a web site with many documents related to traffic studies and mitigation requirements for developers. From the Snohomish County Home Page go to:

Departments/Public Works/Divisions/TES/ProgramPlanning/3066B

County Contacts

- Elbert Esparza, Snohomish County DPW Traffic, 3000 Rockefeller M/S 607, Everett WA 98201, (425) 388-3184, elbert.esparza@snoco.org
- Erik Olson, Snohomish County DPW Traffic, 3000 Rockefeller M/S 607, Everett WA 98201, (425) 388-3099, erik.olson@snoco.org

# The City of Granite Falls Traffic Worksheet and Traffic Study Requirements for Developments in Snohomish County

The City of Granite Falls, through an interlocal agreement (ILA) with Snohomish County, may request traffic mitigation measures from any new development in the unincorporated County that impacts the City's streets. The County will impose the requested mitigation measures to the extent that the County determines that the mitigation is reasonably related to the impacts of the development. To determine the impacts, and to determine reasonable mitigation measures, Snohomish County requires a traffic study from any development in the County that may have impacts on the City's streets. This 'traffic study' may be as simple as completing sections one and two of the City traffic worksheet below, or having a professional traffic engineer conduct a formal traffic study consistent with the requirements in section three below.

- If a development generates less than ten peak-hour trips and the applicant chooses Option A for mitigation payment (standard payment by percent of the City impact fee), then the applicant will generally only have to fill out the first two sections of this traffic worksheet and complete a mitigation offer (see section four).
- However, if a development generates more than ten peak-hour trips, or if the applicant chooses Option B for mitigation payment (comprehensive impact analysis), then the applicant will have to fill out the first section of this worksheet, complete a separate traffic study consistent with the requirements in section three, and complete a mitigation offer (see Section Four).
- Applicants should submit all documents *to the County* as part of their initial submittal.
- Traffic study requirements for impacts on City streets are based on the City's traffic mitigation ordinance and the County/City ILA. At the end of this document the address of the County web site is shown at which copies of the ILA are available.
- Following review of the documents submitted, the City may request supplemental information and analysis as necessary to determine the impacts of the development in accordance with the County/City ILA. The County will require the proposed development to submit the supplemental information and analysis to the extent that the County determines that it is necessary to determine the impacts of the development.

## Section One (1) Worksheet General Information

1. Name of Proposed Development _____

   County Development File Number (if known)_____

2. Name, Address and Phone Number of Applicant_____

   _____

   _____

3. Development Site Address_____

   _____

4. Does this development have frontage on a City street?_____

5. Description of Development (size and specific type)_____

   _____

6. How many new vehicle trips are expected to be generated by the proposed development? (For many common types of developments this information can be provided by the County or the City. For more complex developments trip generation may have to be determined under section three below)

   _____ AM Peak Hour_____ PM Peak Hour_____ Average Daily Trips (ADT)

7. Passenger Car Equivalents (PCE) of ADT _____ [Trucks with 5+ axles = 4 PCEs and Trucks or Buses with 3 or 4 axles = 2 PCEs]

8. Proportionate Share Impact Mitigation: Choose option A or B.

   _____ Option A based on standard payments by percent: go to section two

   _____ Option B based on comprehensive impact analysis: go to section three

## Section Two (2) Proportionate Share Determined by Percentage of the City Impact Fee

### 2(a) Calculation of Payment Amount

1. Standard default estimated percentage of trips impacting the City streets based on subareas (See below) _____%

or

2. Other Percentage: (Note: See author's qualifications in section three below.) Estimated percentage of trips impacting the City streets from attached trip distribution: _____ %

| Sub-Area ID# | * County Traffic Shed | Percentage for Developments that Extract Natural Resources | # Percentage for All Other Types of Developments |
|---|---|---|---|
| CO-GF-1 | Parcels taking access directly or indirectly from the Mountain Loop Highway | 98% | 90% |
| CO-GF-2 | Parcels taking access directly or indirectly from Menzel Lake Road | 70% | 70% ≤ 1 miles<br>50% ≤ 3 miles<br>25% > 3 miles |
| CO-GF-3 | Parcels taking access directly or indirectly from Robe Menzel Road | 70% | 70% ≤ 1 miles<br>50% ≤ 3 miles<br>25% > 3 miles |
| CO-GF-4 | Parcels taking access directly or indirectly from Jordan Road or Engebretson Road | 70% | 70% ≤ 2 miles 50% > 2 miles |
| CO-GF-5 | Parcels taking access directly or indirectly from Burn Road or 100th ST NE | 20% | 30% |
| CO-GF-6 | Parcels taking access directly or indirectly from 84th ST NE | 2% | 10% |
| CO-GF-7 | Parcels taking access directly or indirectly from 163rd AV NE | 2% | 10% |
| CO-GF-8 | Parcels taking access directly or indirectly from SR-92 | 2% | 10% |

*Note: Defines traffic sheds in terms of major arterials. In each case, the traffic shed includes all of the parcels of property that obtain access either directly or indirectly from the major arterial. If a parcel is located in such a spot as to be able to access more than one of the major arterials, then the traffic shed for that parcel will be determined by a trip distribution which will show which major arterial will be used by the majority of the vehicles accessing the parcel.

# Distances measured from closest City limit boundary.

3. Passenger Car Equivalents PCEs (#7 above) _____

4. Impact Fee Rate for Single Family Rate (SFR) $_____

(Note: Consistent with the ILA, developments pay the rate in effect at the time of their submittal. As of 2003 the rates were $2,500 per SFR. Through ordinance, the City Council can change these rates at any time, so consult with the City to find the latest fee rates.)

5. Calculation of Proportionate Share Impact Mitigation

| SFR Rate | | PCEs | | | | % of Trips | | |
|---|---|---|---|---|---|---|---|---|
| $_____ | X | _____ | ÷ | 9.57 | X | _____ | = | $_____ |
| #4 above | | #3 above | | ADT per SFR | | #1 or 2 above | | Mitigation payment |

### 2(b) Determining whether or not an additional traffic study is necessary

Will the development generate more than 10 peak-hour trips *or* are there other impacts that need to be addressed (e.g., level of service, safety, or access and circulation)

_____ No. Skip section three and go to section four.

_____ Yes. Read the introduction to section three and skip to section 3(b).

## Section Three (3) Traffic Study Requirements

Introduction: This section outlines requirements for traffic studies for impacts on City streets. If an applicant chooses (or is required) to complete a traffic study, then it should be submitted along with this worksheet and a mitigation offer. (Note on Author's Qualifications: A traffic study under this section must be conducted by an engineer licensed to practice in the state of Washington with special training and experience in traffic engineering and, preferably, membership in the institute of transportation engineers. For individuals/firms not on the County's approved list, the developer will provide, with the traffic study, the credentials of the individual or firm performing the traffic study certifying compliance with these qualifications.)

**3(a) Proportionate share impact mitigation based on comprehensive impact analysis:**

General Requirements for Traffic Studies to Determine Proportionate Share Obligations of The following describes a general outline for use in the preparation of traffic impact analyses for the City of Granite Falls. This outline is not intended to be all inclusive nor will all items be applicable for all types of development. The City of Granite Falls reserves the right to request additional information for unique or unusual developments.

1) INTRODUCTION/PROJECT DESCRIPTION

   Elements to be included as part of narrative or as figure(s).
   - Project name and proponent - Location of project
   - Vicinity map
   - Proposed uses, if known (e.g., names of stores)
   - Project magnitude (square footage, number of units, etc.)
   - Access locations
   - Current and proposed zoning
   - Description of current use of property
   - Copy of site plan
   - Roadways/intersections to be impacted and reviewed in the analysis
   - Horizon year of project (completion and occupancy); state phasing and time-frame if applicable
   - Parking (if applicable)

2) INVENTORY OF EXISTING CONDITIONS
   - Elements to be included as part of narrative or as figure(s).
   - Description of impacted streets in the area (number of lanes, width, pedestrian facilities, speed limit, lighting, etc.)
   - Daily traffic volumes (if available), or estimated from peak hour counts
   - Noon and PM Peak hour counts (as appropriate)
   - Accident history (when required by the City)
   - CapaCity analyses at critical intersections
   - Transit service

3) DEVELOPMENT IMPACTS

   Elements to be included as part of narrative or as figure(s).
   - Trip generation
   - Trip distribution/assignment
   - CapaCity analyses (with and without the project) at critical locations for the horizon year
   - Projected daily traffic volumes and peak hour volumes (with and without the project) for the horizon year and describing the characteristics of the traffic volumes (i.e., passenger vehicles, trucks, truck/trailer combinations, hours of operations, etc.).
   - Need for turn storage lanes at access(es) (if appropriate)
   - Other concerns (if applicable, such as cut-through traffic in residential areas)

4) CONCLUSIONS/RECOMMENDATIONS

   Brief summary of above analyses with recommendations

5) MITIGATION

   Mitigation shall be in accordance with Granite Falls Municipal Code, Granite Falls Comprehensive Plan, State Law and interlocal agreements.

6) OTHER

   Unusual developments may require analysis of off- peak hours, the AM peak hour, weekends, or ability to serve large trucks, for example, if deemed necessary by the City of Granite Falls. Studies performed as part of an EIS document may also require additional analysis.

**3(b) Trip Generation and AM and PM Peak Hour Trip Distribution and Assignment**

Calculate AM, PM and Daily trip generation consistent with the ITE Trip Generation Handbook and the Snohomish County Public Works Rules. Determine the trip distribution and assignments consistent with the County's document titled "Format for Trip Distributions"(available at the County web site, see below).

- The distributions will be carried out to each key intersection in the City at which the approach or departure volumes on any leg have three (3) or more peak hour trips. Trips should be distributed onto the street system as it is expected to be in six years.

- The distribution should be a schematic map showing the broad distributions of trips in terms of percentages on different streets. Show all County boundaries.
- The assignment should be a schematic map with the impacted key intersections identified and turning movements for each shown in separate diagrams on the same page or on different pages. The assignment should also be presented in tabular form listing each intersection and the number of trips at each movement.

**3(c) Additional Analysis**

The City may request mitigation for impacts on the level of service of City streets, documented safety locations, frontage improvements and access or circulation. The traffic study requirements below are intended to disclose impacts. Based on this information the City may request through the County that the applicant provide additional information showing possible mitigation measures. If any off-site improvements are needed for mitigation the CityCity would work with the applicant to determine requirements for right-of-way, construction plans, right-of-way use permits, construction/maintenance bonds, and other issues.

**Impacts on Level of Service (LOS) of City Intersections for Developments Adding More Than 100 trips per day to City Streets**

Contact City of Granite Falls Public Works for the most current list of intersections with failing level of service. Identify any of these intersections impacted by three or more directional peak-hour trips.

**Impacts on Documented Safety Problem Locations**

Contact the City of Granite Falls Public Works for a list of current locations with documented safety problems. Identify any of these locations impacted by thirty or more daily trips. Note: unlike LOS impacts in which at least three or more peak hour trips have to be added in one direction to require disclosure (e.g., 3 westbound), for documented safety problems, any thirty daily trips added to a documented safety problems location is considered an impact for which disclosure is necessary. (e.g., 20 westbound plus 10 eastbound).

**Impacts on Access or Circulation**

The City may request improvements to existing streets to provide safe and efficient access and/or circulation. In some instances, the City might request provisions for future City streets identified in the Comprehensive Plan or in the City's adopted map of conceptual linkages and approximate corridors (See Exhibit 3 of the ILA). If so, the City will request specific additional information through the County.

**Frontage Improvements, Right of Way, and Access Point Requirements**

Any County development which takes access from a City street or fronts on the right-of-way of the City may also be required to provide frontage improvements, dedicate or deed right-of-way, and meet access-point requirements consistent with City standards. If this may be the case, provide appropriate analysis and documentation to enable a determination by the City and the County as to what standards and requirements to apply.

## Section Four (4) Traffic Mitigation Offer to the City of Granite Falls

The applicant should complete a traffic mitigation offer to the City of Granite Falls that summarizes the mitigation identified in the City traffic worksheet and any additional traffic study. This will facilitate timely review of the development and processing of the application. The form to use for the mitigation offer is titled "Traffic Mitigation Offer to a City by a Development in the Unincorporated County." This form is typically provided to all applicants along with this traffic study checklist. In addition, copies are available from the City contacts or the County web site shown below.

**City Contact** Darla Reese, City Clerk, City of Granite Falls , 206 South Granite Ave, Granite Falls, WA 98252, (360) 691-6441

## Additional Information

County Web Site

Snohomish County Public Works has a web site with many of the documents related to traffic studies and mitigation requirements for developers. From the Snohomish County home page go to:

Departments/Public Works/Divisions/TES/ProgramPlanning/3066B

# PERFORMANCE BOND

Granite Falls Subdivision/
Plat/Permit No: _____
Project Address _____

Owner/Developer/
Contractor ("Principal"): _____
Principal Address: _____
Project Name: _____

WHEREAS, _____, hereinafter referred to as "the Principal," has applied to the City of Granite Falls, hereinafter referred to as "the City," to construct the project known as _____ on a site located at _____, within the City of Granite Falls, and;

WHEREAS, the City approved the requested action on_____, and;

WHEREAS, the approval granted by the City and the provisions of the Granite Falls Municipal Code require certain improvements to be made in connection with construction of the project, the improvements are shown on the approved site plan and/or other required plans and as further defined by the conditions identified in the City file,

NOW, THEREFORE, the undersigned PRINCIPAL and the bonding company,

_____, a corporation authorized to transact surety business in the State of Washington, hereinafter referred to as "the Surety," agree and bind themselves, their heirs, executors, _____, ($_____), lawful money of the United States, according to the following terms and conditions:

1. Completion of Improvements. If the Principal does not complete all improvements required by the above-referenced conditions, plans, and file within _____ weeks/months, then the Surety shall, upon the demand of the City, remit to the city within ten (10) days of receipt of said demand, the amount of this Bond or such lesser amount as may be specific in the demand.

If any improvements are in the City right-of-way, then the Principal will replace and restore such roadway, street, alley, avenue, or other public place to as good as state or condition as at the time of the commencement of said work, and maintain the same in good order, to the satisfaction of the City of Granite Falls Engineering Department or City Engineer, and will comply with all the provisions of any permit and all resolutions or instruments related thereto.

2. Repairs by the City. In the event the Principal fails to complete all of the above-referenced improvements within the time specified by the City, its employees and agents shall have the right, at their sole election, to enter onto said property described above for the purpose of completing the improvements. This provision shall not be construed as creating an obligation on the part of the City or its representatives to complete such improvements. The Principal and Surety agree to reimburse the City for all costs to the City, plus an additional sum equal to fifteen percent (15%) of the City's cost for administrative and enforcement expense.

3. Attorney's Fees. In the event any lawsuit is instituted by the City of Granite Falls, the Principal or the Surety to enforce the terms of this Bond or to determine the rights of any party hereunder, the prevailing party in such litigation shall be entitled to recover from the losing party its cost, including reasonable attorney's fees, incurred as a result of such lawsuit.

4. Release of Bond. This Bond shall remain in full force and effect until the obligations secured hereby have been fully performed and a bond guaranteeing maintenance of all improvements for a period of two (2) years from acceptance has been submitted to the City in an amount of not less than 15 percent (15%) of the cost of the improvements and in a form suitable to the City, and until released in writing by the City at the request of the Surety or the Principal upon expiration of the period specified in paragraph 1 above.

Dated this _____ day of _____, 20____.

| | |
|---|---|
| _____ | _____ |
| Bonding Company | Developer/Owner/Phone # |
| _____ | |
| Officer/Title | |
| _____ | _____ |
| _____ | Accepted by the City of Granite Falls |
| Address/Phone | Dated:_____ |

# ASSIGNMENT OF FUNDS
# IN LIEU OF PERFORMANCE BOND

STATE OF WASHINGTON )
) ss.
COUNTY OF SNOHOMISH )

**WE HEREBY AGREE** that the sum of $_____ will be held in account number _____ in the name of _____ to assure performance requirements hereunder.

**NOW, THEREFORE,** the conditions of these obligations are such that the principal will construct all improvements in full compliance with all the requirements of the City of Granite Falls for the project of _____, as listed below:

| | PROJECT ELEMENT | VALUE |
|---|---|---|
| 1. | _____ | _____ |
| 2. | _____ | _____ |
| 3. | _____ | _____ |
| 4. | _____ | _____ |
| 5. | _____ | _____ |
| 6. | _____ | _____ |

The above-listed project elements are to be completed within one year from the date of assignment of funds approval, or as later may be amended and evidences by a letter of amendment for the City of Granite Falls. This letter shall remain in force and effect until such time as the project elements have been completed and funds released by letter from the City of Granite Falls.

**WE FURTHER AGREE** that up to the full assigned amount shall be released to the City of Granite Falls upon written demand by_____ of the City of Granite Falls. The amount demanded by the _____ or designee will be a good faith estimate of the actual cost of the repairs or improvements.

**WE FURTHER AGREE** that if it is necessary for the City of Granite Falls to take any legal action against any signatory to the Agreement to assure the proper completion of this project, the City of Granite Falls will be entitled to reasonable costs and attorney's fees.

It shall be the responsibility of both the Principal and Surety to inform the City of Granite Falls if they change addresses. Change of address should be mailed to the City of Granite Falls, P.O. Box 1440, Granite Falls, WA 98252. The City will mail only to the last known address of Principal and Surety.

DATED this _____ day of _____, 20_____.

| | |
|---|---|
| _____ | _____ |
| Principal | Name of Financial Institution |
| _____ | _____ |
| Address | Address |
| _____ | _____ |
| City, State and Zip Code | City, State and Zip Code |

**ASSIGNMENT OF FUNDS**

**Plat:**
**Requested By:**
**Date of Request:**

| ITEM | QTY | UNIT | PRICE PER UNIT | TOTAL | % COMPLETE | RELEASE AMOUNT |
|---|---|---|---|---|---|---|
| | | | | | | |
| | | | | | | |
| | | | | | | |
| | | | | | | |
| | | | | | | |
| | | | | | | |
| | | | | | | |
| | | | | | | |
| | | | | | | |
| | | | | | | |
| | | | | | | |
| | | | | | | |
| | | | | | | |
| | | | | | | |
| | | | | | | |
| | | | | | | |

**SUBTOTAL** **$_____** **$_____**
**TAX** **$_____** **$_____**
**TOTAL OF WORK** **$_____** **$_____**

Department:_____
Authorize to Release:_____

# MAINTENANCE BOND

Granite Falls Subdivision/
Plat/Permit No: _____
Project Address _____

Owner/Developer/
Contractor ("Principal"): _____
Principal Address: _____
Project Name: _____

WHEREAS, _____, hereinafter referred to as "the Principal," has applied to the City of Granite Falls, hereinafter referred to as "the City," to construct the project known as _____ on a site located at _____, within the City of Granite Falls, and;

WHEREAS, the City approved the requested action on_____, and;

WHEREAS, the approval granted by the City and the provisions of the Granite Falls Municipal Code require certain improvements to be made in connection with construction of the project, the improvements are shown on the approved site plan and/or other required plans and as further defined by the conditions identified in the City file,

WHEREAS, a further condition is that the Principal will maintain and repair the improvements in said project for a period of _____ months from their final acceptance by the City.

NOW, THEREFORE, the undersigned PRINCIPAL and the bonding company,

_____, a corporation authorized to transact surety business in the State of Washington, hereinafter referred to as "the Surety," agree and bind themselves, their heirs, executors, _____, ($_____), lawful money of the United States, according to the following terms and conditions:

1. Failure to Repair and Maintain. If the Principal does not repair and maintain all improvements required by the above-referenced conditions, plans, and file within _____ months, then the Surety shall, upon the demand of the City, remit to the City within ten (10) days of receipt of said demand, the amount of this Bond or such lesser amount as may be specific in the demand.

2. Repairs by the City. In the event the Principal fails to make any repairs or maintenance on the improvements within the time specified by the City (generally after fourteen (14) days notice, or less, if the City determines and emergency exists), its

employees and agents shall have the right, at their sole election, to enter onto said property described above for the purpose of making repairs or maintenance. This provision shall not be construed as creating an obligation on the part of the City or its representatives to repair and maintain such improvements. The Principal and Surety agree to reimburse the City for all costs to the City, plus an additional sum equal to fifteen percent (15%) of the City's cost for administrative and enforcement expense.

3. Attorney's Fees. In the event any lawsuit is instituted by the City of Granite Falls, the Principal or the Surety to enforce the terms of this Bond or to determine the rights of any party hereunder, the prevailing party in such litigation shall be entitled to recover from the losing party its cost, including reasonable attorney's fees, incurred as a result of such lawsuit.

4. Release of Bond. This Bond shall remain in full force and effect until the obligations secured hereby have been fully performed, and until release in writing by the City at the request of the Surety of the Principal upon expiration of the period specified in paragraph 1 above.

Dated this _____ day of _____, 20____.

| | |
|---|---|
| _____ | _____ |
| Bonding Company | Developer/Owner/Phone # |
| _____ | |
| Officer/Title | |
| _____ | _____ |
| _____ | Accepted by the City of Granite Falls |
| Address/Phone | Dated:_____ |

## SURETY ACKNOWLEDGEMENT

STATE OF WASHINGTON )
) ss.
County of Snohomish )

On this _____ day of _____, _____, before me, the undersigned, a Notary Public in and for the State of Washington, duly commissioned and sworn, personally appeared _____, to me known to be the _____, of _____, the corporation that executed the foregoing instrument, and acknowledged the said instrument to be the free and voluntary act and deed to said corporation, for the uses and purposes therein mentioned, and on oath states that _____ was authorized to execute said instrument and that the seal affixed is the corporate seal of said corporation.

_____
NOTARY PUBLIC in and for the State of Washington
My Commission Expires:_____

## DEVELOPER/OWNER

STATE OF WASHINGTON )
) ss.
County of Snohomish )

On this _____ day of _____, _____, before me, the undersigned, a Notary Public in and for the State of Washington, duly commissioned and sworn, personally appeared _____, to me known to be the _____, of _____, the corporation that executed the foregoing instrument, and acknowledged the said instrument to be the free and voluntary act and deed to said corporation, for the uses and purposes therein mentioned, and on oath states that _____ was authorized to execute said instrument and that the seal affixed is the corporate seal of said corporation.

_____
NOTARY PUBLIC in and for the State of Washington
My Commission Expires:_____

# CORPORATE ACKNOWLEDGEMENT

STATE OF WASHINGTON )
) ss.
County of Snohomish )

On this _____ day of _____, _____, before me, the undersigned, a Notary Public in and for the State of Washington, duly commissioned and sworn, personally appeared _____, to me known to be the _____, of _____, the corporation that executed the foregoing instrument, and acknowledged the said instrument to be the free and voluntary act and deed to said corporation, for the uses and purposes therein mentioned, and on oath states that _____ was authorized to execute said instrument and that the seal affixed is the corporate seal of said corporation.

_____
NOTARY PUBLIC in and for the State of Washington
Printed Name:_____
Residing At:_____
My Commission Expires:_____

**CITY OF GRANITE FALLS**
**ASSIGNMENT OF FUNDS**
**IN LIEU OF MAINTENANCE BOND**

Project Name/Permit No.: _____

Developer/Principal: _____

In lieu of a maintenance bond, we hereby agree that the sum of $_____ will be held in savings account number _____ in _____ in the name of _____ to assure maintenance requirements hereunder.

Now, therefore, the conditions of these obligations are such, that the principal shall replace or correct any part or parts of all improvements, installed under Plans approved by the City of Granite Falls _____ day of _____, _____ discovered by the City of Granite Falls to be defective in material or inefficient or otherwise unsatisfactory in operations, through faulty construction, materials or workmanship, or through any fault of design or detail arising with Contractor or manufacturer within two years of the acceptance of the work (date) and transfer of title. Such parts shall be replaced with parts constructed in accordance with designs and of material satisfactory to the City.

We further agree that up to the full amount of the funds in the above referenced account shall be released to the City of Granite Falls upon written demand by the Mayor of the City. The amount demanded by the Mayor will be a good faith estimate of the actual cost of the repairs.

We further agree that if it is necessary for the City of Granite Falls take any legal action against any signatory to this agreement to assure compliance with its terms, the City shall be entitled to its reasonable costs and attorney's fees.

It shall be the responsibility of both the principal and the financial institution to inform the City of Granite Falls, in writing, of any change of mailing address. The City will mail only to the last known address of principal and financial institution.

Signed this _____ day of _____, 20____.

| | |
|---|---|
| _____ | _____ |
| Principal | Name of Financial Institution |
| _____ | _____ |
| Address | Address |
| _____ | _____ |
| City, State, Zip | City, State, Zip |
| Phone No. _____ | Phone No. _____ |

| | |
|---|---|
| _____ | _____ |
| Signature of Principal | Signature of Bank Official |
| _____ | _____ |
| Print Name and Title | Print Name and Title |

STATE OF WASHINGTON: )
) ss.
COUNTY OF SNOHOMISH: )

I Certify that I know or have satisfactory evidence that _____ is the person who appeared before me, and said person acknowledged that he/she signed this instrument, on oath stated that he/she was authorized to execute the instrument and acknowledgment it as the officer of _____ to be the free and voluntary act of such party for the uses and purposes mentioned in the instrument.

Dated: _____
(seal or stamp)

_____
Notary Public (Title) in and for the State of Washington,
Residing at _____

_____
Print Name
My appointment expires: _____

EASEMENT FOR UTILITIES

THIS EASEMENT is made on the _____ day of _____, _____ ("Effective Date") by _____, a Washington corporation ("Grantor").

1. Grant and Location of Easement. Grantor hereby grants and conveys to the City of Granite Falls, a municipal corporation ("Grantee"), its successors and assigns, a non-exclusive utility easement ("Easement") with immediate right of entry and continued access over, under, and across the real property legally described on Exhibit A.

2. Purpose of Easement. The purpose of this Easement is for the construction, improvement, maintenance, and repair of underground utilities, including but not limited to an underground water, storm drainage, and sanitary sewer pipes, and other appurtenant structures.

3. Maintenance of Easement. Grantee shall maintain and repair the utility pipes, water mains, and its appurtenant structures so as not to damage the property burdened by this Easement, or any other property.

4. Interference. Grantor may use the surface above the Easement, PROVIDED that its use does not interfere with or cause damage to the utility pipes, water mains, and appurtenant structures, PROVIDED FURTHER that prior to constructing any building or planting any trees within the Easement Grantor shall obtain the written consent of Grantee, which consent shall not be unreasonably withheld. Grantor may construct a fence or other obstruction on Grantor's property, PROVIDED however that Grantor does not prohibit or impede Grantee's access to the Easement. Grantor may grant other non-exclusive easement rights in and to the Easement; PROVIDED, however, that no other utility pipe, line, or structure shall be located closer than five (5) feet parallel to the Grantee's utility pipe, water main, and/or appurtenances; and, PROVIDED FURTHER, that prior to installation of any utility pipe, line, or structure that crosses the Easement, Grantor shall obtain the written consent of Grantee, which consent shall not be unreasonably withheld. If, in exercising any right to use the surface above the Easement or grant other easements, the Easement is disturbed, Grantor shall return the Easement to its condition prior to its disruption, at Grantor's sole cost and expense.

5. Title. The Grantor warrants that the Grantor has good title to the above property.

6. Successor and Assigns. This agreement shall run with the property and be binding on the parties, their successors, and assigns.

_____
A Washington corporation

By: _____
Its: _____

STATE OF WASHINGTON )
): ss.
County of Snohomish )

On this day personally appeared before me _____ to me known to be the person who executed the within instrument as the _____ of _____, the corporation that executed the within and foregoing instrument, and acknowledged the said instrument to be the free and voluntary act and deed of said corporation, for the uses and purposes therein mentioned, and on oath stated that he/she is authorized to execute the said instrument and that the seal affixed in the corporate seal of said corporation.

GIVEN under my hand and official seal this _____ day of _____, _____.

_____
_____
(Type/Print Name)
Notary Public in and for the State of Washington,
residing at _____.
My appointment expires: _____.

**CITY OF GRANITE FALLS, SNOHOMISH COUNTY**

**BILL OF SALE**

KNOW ALL BY THESE PRESENTS that for and in consideration of the sum of One Dollar ($1.00) and other good and sufficient consideration, receipt whereof is hereby acknowledged, the undersigned grantor(s) _____ do(es) by these presents hereby convey, set over, assign, transfer and sell to the City of Granite Falls, Snohomish County, Washington, a municipal corporation, the following described water/sanitary/storm or roadway system and all appurtenances thereto, situated in the City of Granite Falls, Snohomish County, Washington:

| DESCRIPTION | ALONG | FROM | TO | SIZE | LENGTH |
|---|---|---|---|---|---|

the said grantor(s) hereby warrants that he, they, it, is/are the sole owner(s) of all the property above described; that they have full power to convey all rights herein conveyed and agree to hold the City of Granite Falls harmless from any and all claims which might result from execution of this document.

IN WITNESS WHEREOF the grantor(s) has/have executed these presents this _____ day of _____, 20____.

STATE OF WASHINGTON )
) ss.
SNOHOMISH COUNTY )

On this _____ day of _____, 20_____, before me the undersigned Notary Public personally appeared _____, to me known to be the individual(s) who executed the within and foregoing instrument and acknowledged that___ he___ signed and sealed the same as _____ free and voluntary act and deed, for the uses and purposes therein mentioned.

GIVEN under my hand and official seal the day and year in this certificate above written.

_____
Notary Public in and for the State of Washington

Residing at _____

_____

**SAMPLE COPY**

# AFFIDAVIT OF NO LIENS

STATE OF WASHINGTON )
) ss
COUNTY OF SNOHOMISH )

Re: _____

The undersigned, being first duly sworn upon oath, depose and say:

I am the developer of a road and/or utility systems, or additions thereto, for the above-referenced project, and hereby certify as follows:

1. That there are no liens against or which may be filed against said project.

2. That all debts, labor bills, and the state sales taxes have been paid in connection with the above-referenced project.

_____
By:_____

SUBSCRIBED AND SWORN to before me this ___ day of _____, 20_____.

_____
Notary Public in and for the State of
Washington, residing at

(Notary Seal)

**CITY OF GRANITE FALLS**
**AGREEMENT FOR INSPECTION AND MAINTENANCE OF PRIVATELY MAINTAINED STORM DRAINAGE FACILITIES**

**Declaration of Covenant**

In consideration of approval of the development known as _____, relating to real property legally described as follows:

**The undersigned, as owner(s), covenant and agree that:**

1. The owner and subsequent owners of the above described property shall maintain the approved storm drainage system shown on the City approved construction plans or City approved changes thereto in compliance with the Operation and Maintenance Standards in WDOE Stormwater Management Manual for Western Washington, as adopted by the City.

2. The owner shall, maintain an Operation and Maintenance Schedule, record showing maintenance performed. The Operation and Maintenance records shall be retained by the Owner for a minimum of three years and shall be available to the City for inspection at all reasonable times.

3. The owner shall provide access to the storm drainage system at reasonable times for regular inspection by the City or its authorized representative to ensure that the facility is maintained in proper working condition in accordance with the Operation and Maintenance Schedule.

4. If at any time, in accordance with the Operations and Maintenance Schedule, the City of Granite Falls reasonably determines that maintenance or repair work is required to be done to the existing, approved storm drainage facilities installed on the property the City shall give the current owner 30-days notice that the City intends to perform such maintenance or repairs, or to have them performed by others.

5. If the owner has not completed or is not diligently pursuing the repair or maintenance of the system and it becomes necessary for the City of Granite Falls to perform the work, the current owners will assume responsibility for the cost of such maintenance or repair and will reimburse the City within thirty days of the receipt of the invoice. Overdue payments will require payment of interest at the current legal rate for liquidated judgments, and any costs or fees incurred by the City, should any legal action be required to collect such payments, will be borne by the parties responsible for said reimbursements.

6. If at any time the City of Granite Falls reasonably determines that the existing and approved storm drainage system on the property poses a hazard to life and limb, endangers property, or adversely affects the safety and operations of a public way, due to failure, damage or non-maintenance of the existing on-site storm system, and that the situation is so adverse as to preclude written notice to said owners, the City may take the measures necessary to eliminate the hazardous situation (which will mean repair or clean out of the existing system only to the same standards as originally installed and approved) provided the City has first made a reasonable effort to locate said owner before acting.

   The current owners will assume responsibility for the cost of such maintenance or repair; and will reimburse the City within thirty days of receipt of the invoice. Overdue payments will require payment of interest at the current legal rate for liquidated judgments, and any costs or fees incurred by the City, should any be borne by the parties responsible for said reimbursements.

7. The owner shall keep the City of Granite Falls informed at all times as to the name, address and telephone number of the contact person responsible for the performance of maintenance or repair work to the storm drainage facilities.

   These covenants are intended to protect the value and desirability of the real property described above, and to benefit all the citizens of the City of Granite Falls. They shall run with the land and be binding on all parties having or acquiring from the current owners or their successors, any right, title or interest therein, and to the benefit of all the citizens of the City of Granite Falls.

8. Lien: The City shall have a lien for costs expended by it for any repairs or maintenance properly chargeable to the owner hereunder, which lien shall be prior in right to the lien of secured parties under deeds of trust, mortgages or real estate contracts, regardless of the date of their recordation, and which shall be recordable and enforceable in the manner provided for materialmens' contractors' liens pursuant to RCW Ch. 60.04 or any successor statute thereto.

9. Attorneys' fees and costs: Should any party institute proceedings to enforce any right hereunder, including filing a lien under paragraph 8, reasonable costs and attorneys' fees thereby incurred shall be awarded to the prevailing party in such proceeding.

| | |
|---|---|
| _____ | _____ |
| City of Granite Falls, Mayor (Signature) | Owner (Signature) |
| _____ | _____ |
| City of Granite Falls, Mayor (Print) | Owner (Print) |
| _____ | _____ |
| Date | Address |
| | _____ |
| | City, State, Zip |
| | Phone:_____ |
| | Date:_____ |

STATE OF WASHINGTON

ss. (INDIVIDUAL ACKNOWLEDGMENT)

County of _____

I, _____ , Notary Public in and for the State of Washington, residing at _____ , do hereby certify that on this _____ day of _____ , 20___, personally appeared before me _____ to be known to be the individual described in and who executed the within instrument and acknowledged that _____ signed and sealed the same as _____ free and voluntary act and deed for the uses and purposes herein mentioned.

**GIVEN UNDER MY HAND AND OFFICIAL SEAL**
this ____ day of _____, 20___.

_____
Notary Public in and for the State of Washington, residing at
_____ in said County. My commission expires
_____ .

# STANDARD DETAILS

# LIST OF STANDARD DETAILS

| Title of Drawing | File Name |
|---|---|
| **Roadway** | |
| Major Arterial Street Section | ART-SECT |
| Minor Arterial Street Section | ART-SECT |
| Collector Street Section | COL-ST |
| Local Access Street Section | LO-AC-ST |
| Alley Section | ALE-SECT |
| Trench – Pavement Restoration | TRE-REST |
| Concrete Curbs | CG-1 |
| Turn Arrow Details | CHAN-1 |
| Pavement Markings | CHAN-2 |
| Parking Space Markings | CHAN-3 |
| Cement Concrete Driveway with Planter | DW-1 |
| Cement Concrete Driveway No Planter Strip | DW-2 |
| Mailbox Detail | ML-1 |
| Poured Monument in Place | MON-1 |
| Surface Monument | SURF-MON |
| Sight Distance (1 of 2) | SIGHT-DI |
| Sight Distance (2 of 2) | SIGHT-DI |
| Sight Distance Uncontrolled Intersection | SIGHT-DI-UC |
| Rock Wall Detail | RKWL |
| Speed Hump; Design, Pavement Marking, and Signing | SPD-HUMP |
| Manhole, or Catch Basin (Type II) Grade Adjustment Detail | STOM-2 |
| Sidewalk without Planting Strip | SW-1 |
| Sidewalk with Planting Strip | SW-1 |
| Parallel Curb Ramp | T-24A PARALLEL CURB |
| Perpendicular Curb Ramp | T-24B PERP CURB |
| Single Direction Curb Ramp | T-24C SINGLE CURB |
| Sidewalk Ramp to Shoulder | T-24D SWALK RAMP |
| Detectable Warning Surface | T-24F DETECT2 |
| Cul-de-Sac | T-5 CULDESAC |
| Temporary Cul-de-Sac | T-6 TEMP CULDESAC |
| Alternative Fire Apparatus Access Turnaround | AAT |
| Valve Box | VALV-BOX |
| Sign Installation Detail | ROAD SIGNS |
| Street Sign Location Detail and Street Name Sign Detail | ROAD SIGNS |

| **Title of Drawing** | **File Name** |
|---|---|
| **Storm** | |
| Catch Basin – Type 1 | SW-4 |
| Catch Basin – Type 1L | SW-5 |
| Catch Basin Frame and Grate | STOM-3 |
| Catch Basin Type II | CB-TP2 |
| Flow Restrictor Tee Type | SW-20 |
| Riprap and Energy Dissipation for Ditch | DTCH-2 |
| Vaned Grate | SW-9 |
| Standard Frame Installation | SW-10 |
| Through Curb Inlet Frame | SW-11 |
| Through Vertical Curb Inlet Frame and Grate | SW-12 |
| Solid Storm Drain Cover | SW-7 |
| 24" Bolt – Locking Manhole and Ring Cover | SW-13 |
| Trash Rack Debris Barrier | SW-17 |
| Wetland Sign Installation | SW-28 |
| **Sanitary Sewer** | |
| Typical Precast Manhole | TPMH |
| Typical Manhole Plan View | TMHP |
| Trench Section for Flexible Pipe | SSTSFLEXP |
| Shallow Precast Manhole | TS-PMH |
| Typical Saddle Manhole | TSMH |
| Inside Drop Manhole | IDMH |
| Outside Drop Manhole | ODMH |
| Manhole Frame Collar | MHCLAR |
| Manhole Lid | SSMH LID |
| Polypropylene Ladder and Manhole Steps | PLMHS |
| Force Main Discharge Manhole | FMDMH |
| New Side Sewer Service | SSD |
| Standing Side Sewer | SSS |
| Roof Structure for Electrical Enclosure | RSEE |
| Vacuum Relief Assembly | AVRA |
| Grease Interceptor (1 of 2) | GREA-INT |
| Grease Interceptor (2 of 2) | GREA-INT |
| **Water** | |
| Water Main Depth Requirements | WA-MAIN |
| Trench Section for Rigid Pipe | WA-MAIN2 |
| Minimum Utility Spacing | TYP-UTIL |
| Thrust Block Detail (1 of 2) | THRU-BLO2 |
| Thrust Block Detail (2 of 2) | THRU-BLO2 |
| Thrust Block for Ductile Iron Pipe | DUCT-PIP |
| Vertical Anchor Block | ANCH-BLO |

| **Title of Drawing** | **File Name** |
|---|---|
| **Water – (continued)** | |
| Wet or Hot Tap Connection | TAP-CONN |
| Cut In Connection | CUT-CONN |
| Fire Hydrant In Planter Strip (Curb, Gutter, Sidewalk) | FIRE-HYD2 |
| Fire Hydrant In Sidewalk (Curb, Gutter, Sidewalk) | FIRE-HYD2 |
| Fire Hydrant Relocation | FIRE-HYD3 |
| Fire Hydrant In Cut or Fill | FIRE-HYD4 |
| Fire Hydrant Guard Post Installation | FIRE-HYD5 |
| Fire Hydrant Installation (Extruded Curb) | FIRE-HYD |
| 1" and Smaller Water Service (1 of 2) | 1-WAT |
| 1" and Smaller Water Service (2 of 2) | 1-WAT |
| 1-1/2" & 2" Water Service | 2-WAT |
| Meter and Meter Vault Assembly 3" through 10" (1 of 2) | 3MM |
| Meter and Meter Vault Assembly 3" through 10" (2 of 2) | 3MM |
| Permanent End-Line Blowoff Assembly | BLOW-OFF2 |
| Air & Vacuum Release Assembly | AIR-RLS |
| Water Sampling Station | WAT-SAMP |
| Double-Check Detector Backflow Prevention Assembly | DCD-BPA |
| Pressure Reducing Station (1 of 2) | PRSD |
| Pressure Reducing Station (2 of 2) | PRSD |
| Water Valve Stem Extension | WAT-VALV |
| Reduced Pressure Backflow Assembly 3/4" to 2" | RPBA |
| Reduced Pressure Backflow Assembly 3" and Larger | RPBA-2 |
| Reduced Pressure Backflow Detector Assembly 3" and Larger | RPBA-2 |
| “Individual” Double Check Detector Assembly | DBL-CHCK |
| Fire Line Connection | FIRELINE |
| **Miscellaneous** | |
| Removable Bollard | REM-BOL |
| Type III Barricade for Future Road Extension | BARICADE |
| Swing Gate and Fence Details | SGF-1 |
| Gravel Sack Check Dam | GRVCK-DAM |
| Siltation Fence Detail | SILT-FENC |
| Storm Drain Inlet Protection Detail | SD-IPD |
| Ground Cover Planting | PLNT-DET |
| Ball & Burlap Planting | PLNT-DET-REV |
| Bare Root/Can Stock Planting Detail | PLNT-DET-2 |
| Rooted Cutting/Offset Seedling Detail | PLNT-DET-2 |
| Street Tree Planting and Staking Detail | LSCP-1 |

# ROADWAY DETAILS

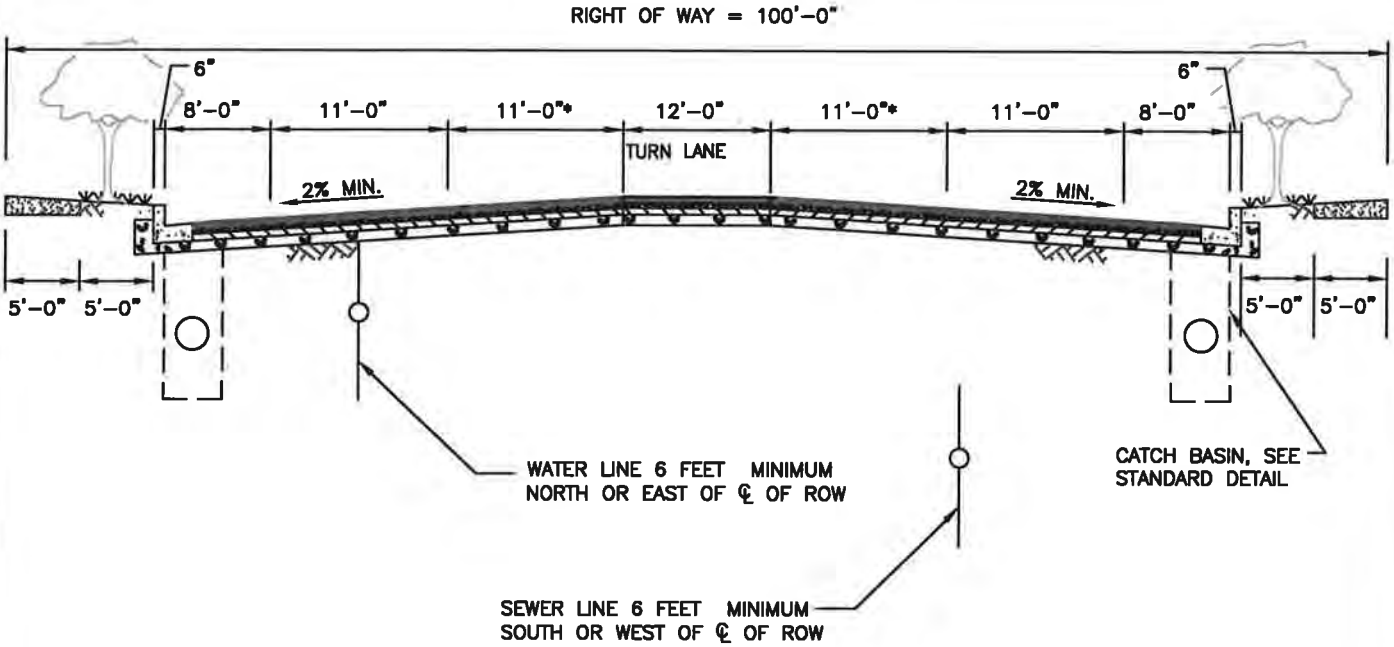


*NOTE:
2ND TRAVEL LANE CONSTRUCTION AND TURN LANE AS NEEDED BASED UPON TRAFFIC CAPACITY AND SAFETY NEEDS. CITY MAY REQUIRE CENTER VEGETATION STRIP IN SPECIAL CIRCUMSTANCES.

FOR ADDTIONAL REQUIREMENTS SEE SECTION 5.3 OF THE PUBLIC WORKS STANDARDS.

# CITY OF GRANITE FALLS

MAJOR ARTERIAL
STREET SECTION

APPROVED: Warren H Parker

DATE: 8/31/17

DWG. NO.
ART-SECT

L:\GrFalls\15484 PW Stds\Road Dtl\ART-SECT.dwg, 9/1/2017 9:59 AM, BRUCE SHELDON

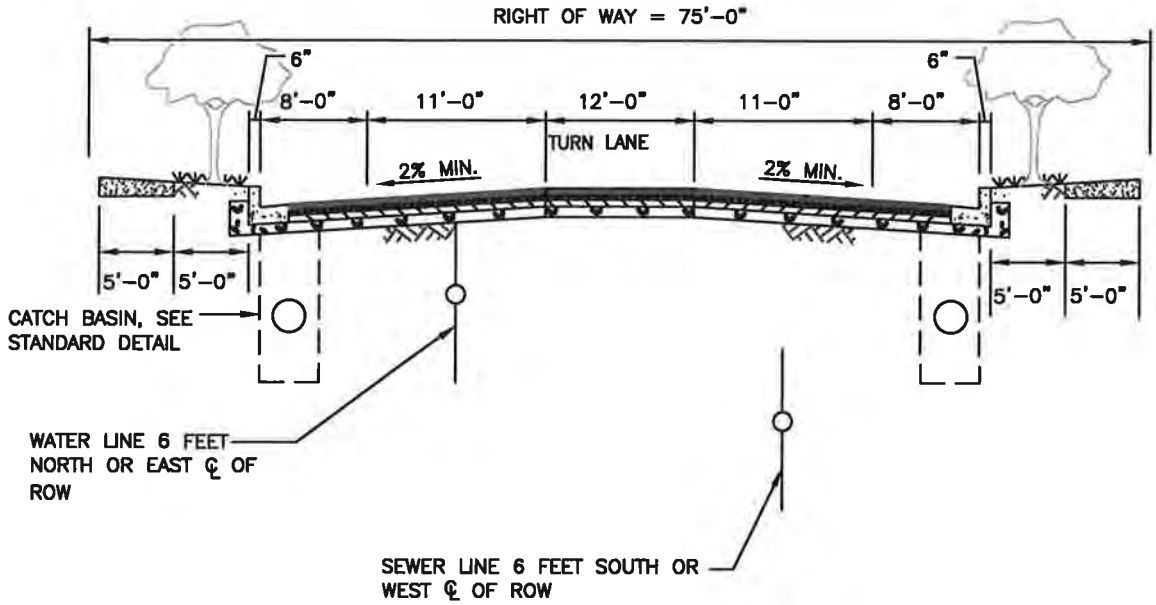


NOTES:

1. TURN LANE CONSTRUCTION AS NEEDED BASED UPON TRAFFIC CAPACITY AND SAFETY NEEDS. CITY MAY REQUIRE CENTER VEGETATION STRIP IN SPECIAL CIRCUMSTANCES.
2. FOR ADDITIONAL REQUIREMENTS SEE SECTION 5.3 OF THE PUBLIC WORKS STANDARDS.
3. PAVEMENT DESIGN BY CURRENT WASHINGTON STATE LICENSED ENGINEER AND AS APPROVED BY THE CITY.

CITY OF GRANITE FALLS

MINOR ARTERIAL STREET SECTION

APPROVED: Warren W Peterson

DATE: 8/31/17

DWG. NO. ART-SECT

L:\GrFalls\15484 PW Stds\Road Dtl\ART-SECT.dwg, 9/1/2017 9:59 AM, BRUCE SHELDON

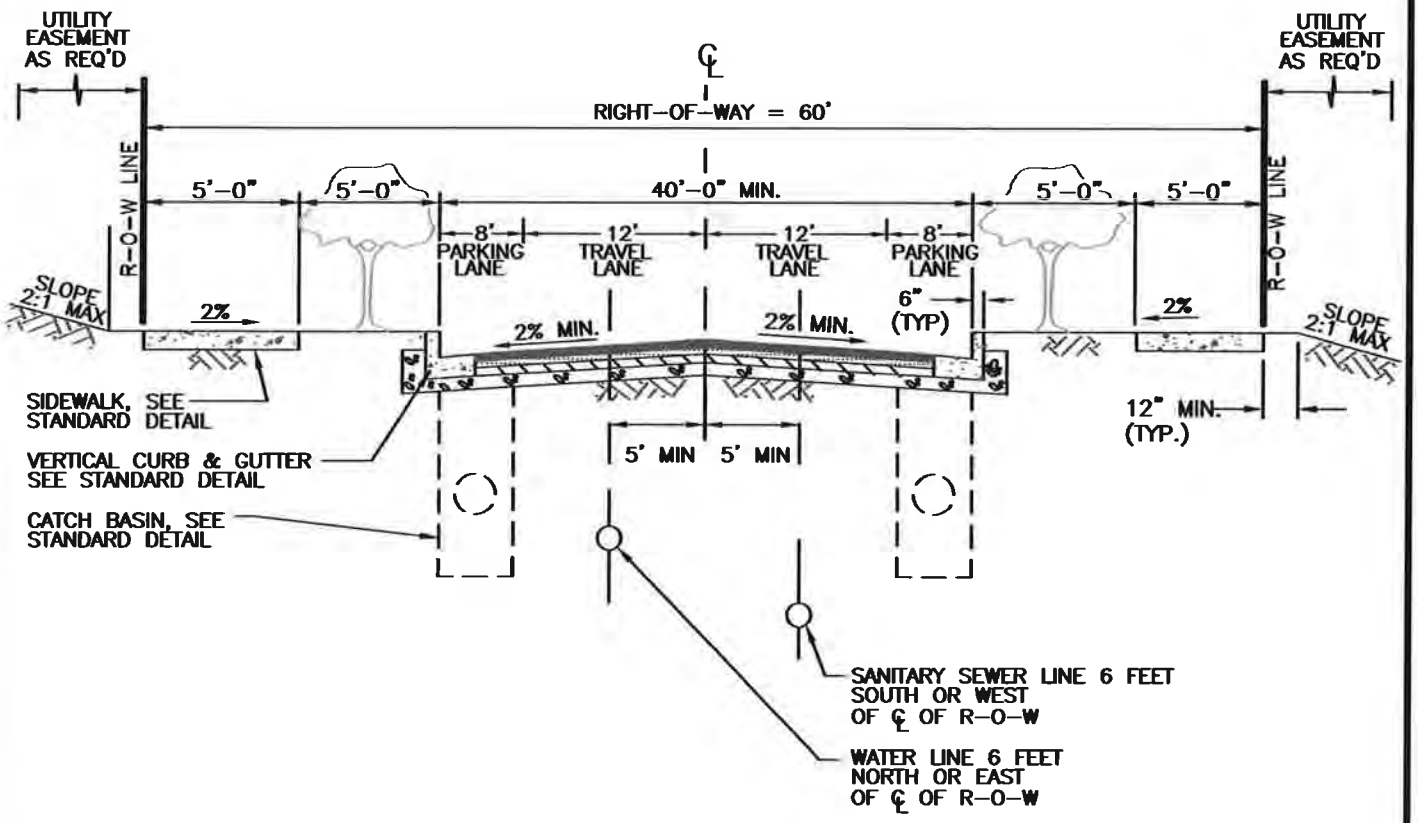


**NOTES:**

1. FOR ADDITIONAL REQUIREMENTS SEE SECTION 5.3 OF THE PUBLIC WORKS STANDARDS.
2. PAVEMENT DESIGN BY CURRENT WASHINGTON STATE LICENSED ENGINEER AND AS APPROVED BY THE CITY.

# CITY OF GRANITE FALLS

## COLLECTOR STREET SECTION

APPROVED: Karen W. Ricks

DATE: 10/18/2016

DWG. NO. COL-ST

L:\GrFalls\15484 PW Stds\Road Dtl\COL-ST.dwg, 10/18/2016 4:39 PM, RUSSELL HORITA

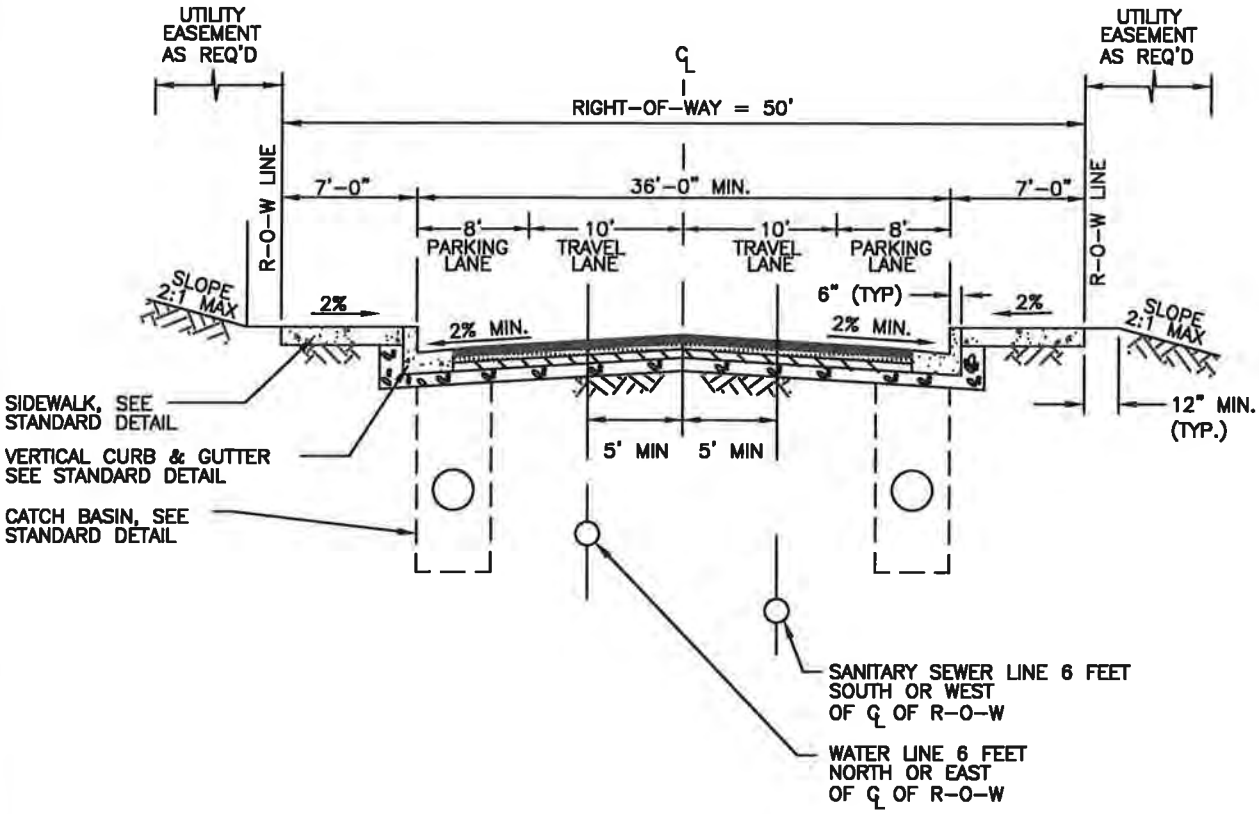


**NOTES:**

1. FOR ADDITIONAL REQUIREMENTS SEE SECTION 5.3 OF THE PUBLIC WORKS STANDARDS.
2. PAVEMENT DESIGN BY CURRENT WASHINGTON STATE LICENSED ENGINEER AND AS APPROVED BY THE CITY.

# CITY OF GRANITE FALLS

LOCAL ACCESS STREET SECTION

APPROVED: Warren W. Perkins

DATE: 8/31/17

DWG. NO. COL-ST

L:\GrFalls\15484 PW Stds\Road Dtl\COL-ST.dwg, 9/1/2017 10:24 AM, BRUCE SHELDON

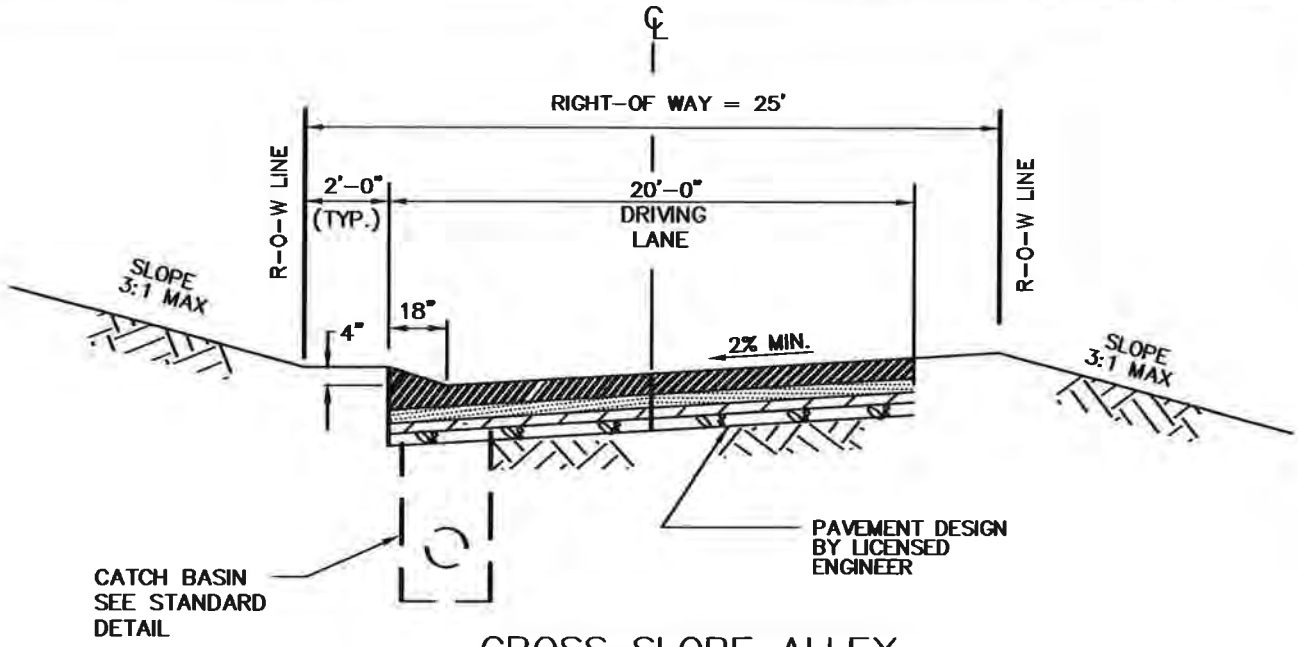


CROSS SLOPE ALLEY

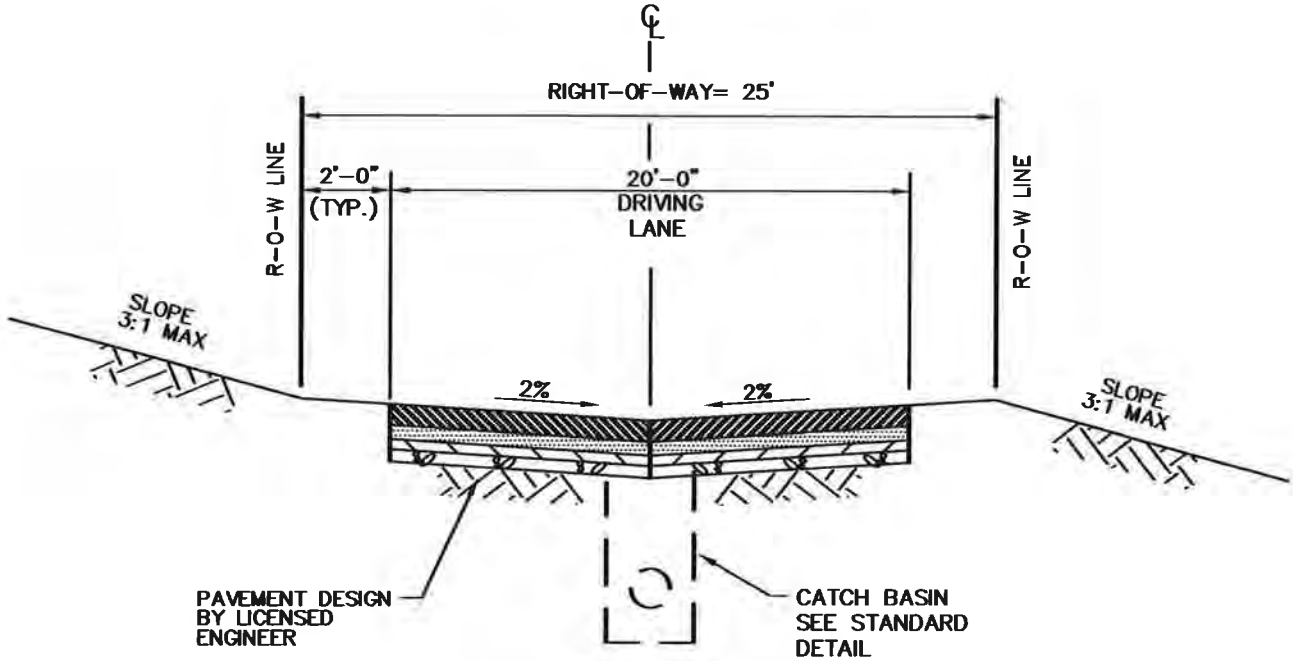


"V" SECTION ALLEY

**NOTES:**

1. ALLEYS MAY BE ALLOWED ONLY IF APPROVED BY CITY ENGINEER.
2. FOR ADDITIONAL REQUIREMENTS SEE TABLE 5-3 OF THE PUBLIC WORKS STANDARDS.

CITY OF GRANITE FALLS

ALLEY SECTION

APPROVED: Warren W. Rhodes

DATE: 10/18/2016

DWG. NO.
ALE-SECT

L:\GrFalls\15484 PW Stds\Road Dtl\ALE-SECT.dwg, 10/18/2016 4:39 PM, RUSSELL HORITA

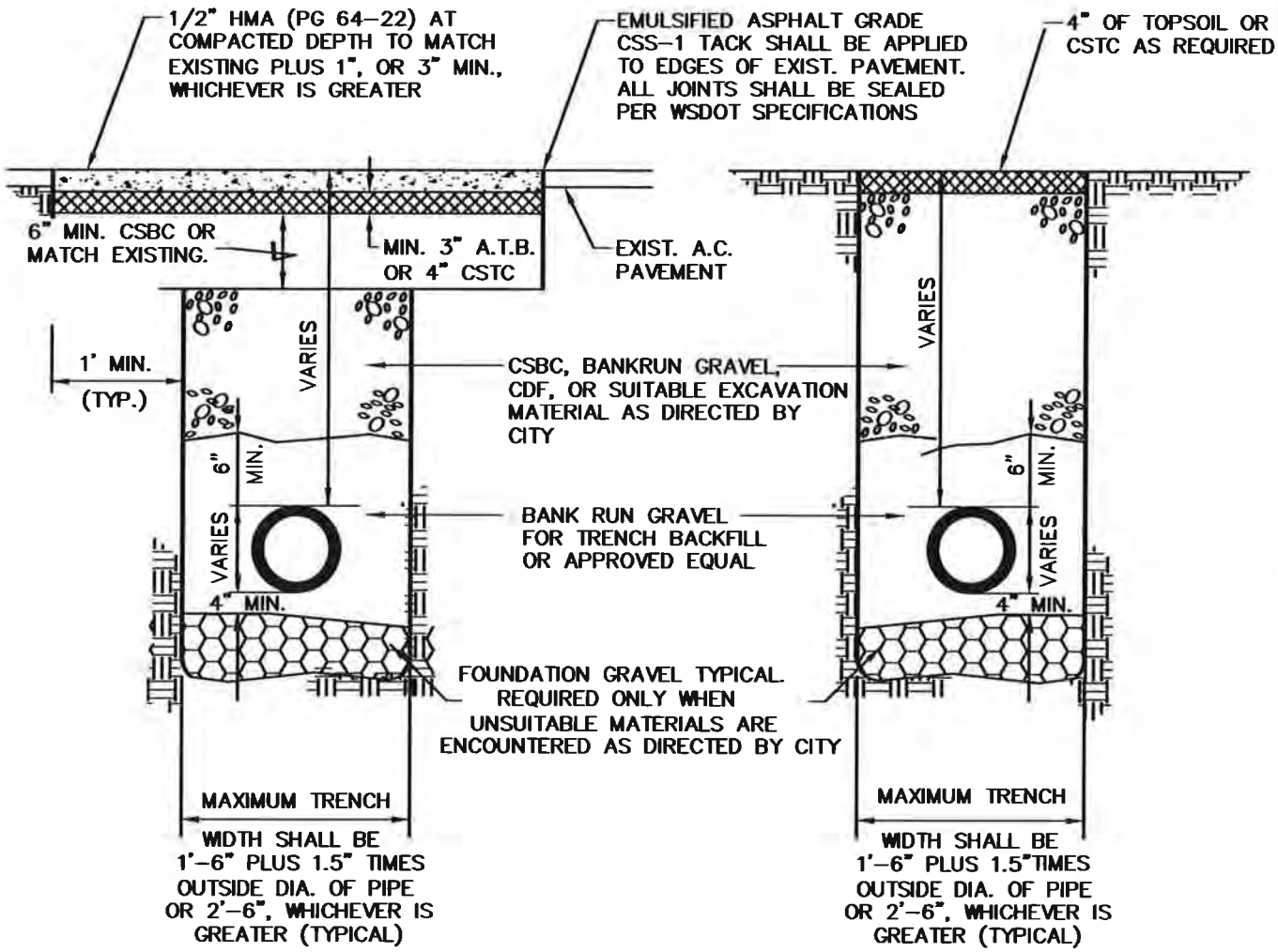


NOTES:

1. ALL MATERIALS EXCEPT A.C.P. AND BEDDING MATERIAL SHALL BE COMPACTED IN 6-INCH MAXIMUM LIFTS TO 95% DENSITY.
2. BEDDING SHALL CONFORM TO CITY STANDARDS OF STANDARD SPECIFICATIONS.
3. COMPACTION: BEDDING SHALL BE COMPACTED TO 95% MAX. AS DETERMINED BY ASTM D1557. BACKFILL SHALL BE COMPACTED TO 90% IN UNPAVED AREA, AND 95% IN PAVED OR SHOULDER AREAS AS DETERMINED BY ASTM D1557.
4. THE CITY MAY REQUIRE THAT TRENCH BACKFILL BE COMPLETED WITH CFD IN LIEU OF COMPACTED GRANULAR BACKFILL.
5. ALL MATERIALS, WORKMANSHIP, AND INSTALLATION SHALL BE IN CONFORMANCE WITH THE STANDARD SPECIFICATIONS FOR ROAD, BRIDGE AND MUNICIPAL CONSTRUCTION AS AMENDED BY CITY STANDARDS.
6. ALL EDGES SHALL BE NEAT-LINE SAWCUT.
7. FULL ROAD OVERLAY REQUIRED FOR LONGITUDINAL TRENCHES.

CITY OF GRANITE FALLS

TRENCH – PAVEMENT RESTORATION

APPROVED: Warren M Ruhl

DATE: 10/18/2016

DWG. NO. TRE-REST

L:\GrFalls\15484 PW Stds\Road Dtl\TRE-REST.dwg, 10/18/2016 4:40 PM, RUSSELL HORITA

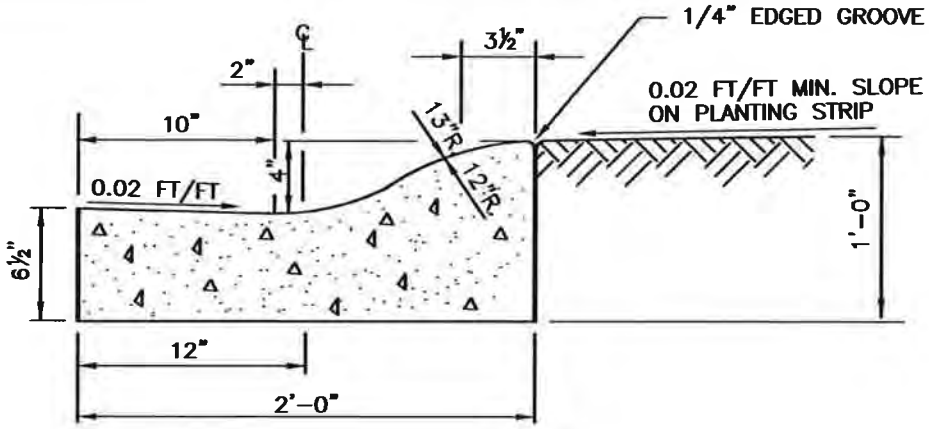


ROLLED CONCRETE CURB AND GUTTER

NOTES:

1. THE CURBS, GUTTERS AND SIDEWALKS SHALL HAVE CONTRACTION JOINTS (3/8" x 1 1/2" AT INTERVALS OF NOT GREATER THAN 15'-0".
2. CEMENT CONCRETE SHALL BE 3000 PSI.
3. ROLLED CONCRETE CURBS AND GUTTERS ARE ALLOWED ONLY IF SPECIFICALLY APPROVED BY THE CITY.
4. 3 – #4 BARS REQUIRED AT DRIVEWAYS, 7-INCHES O.C.

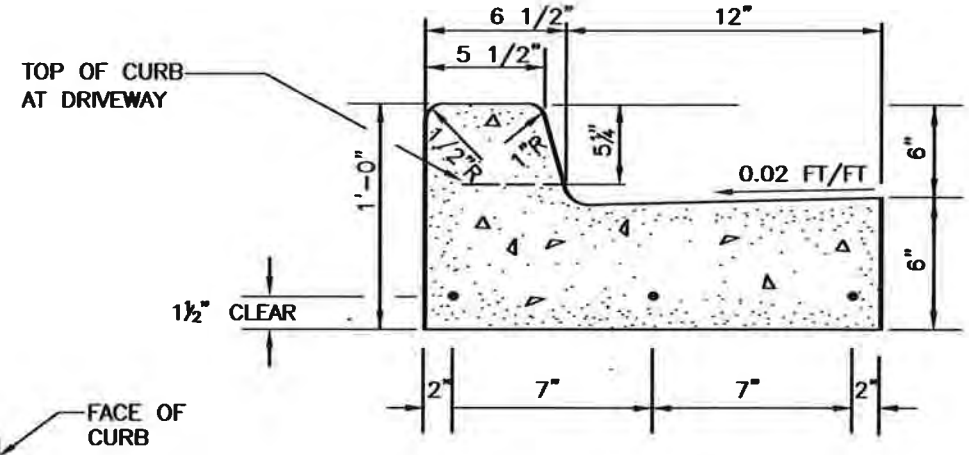


VERTICAL CONCRETE CURB AND GUTTER

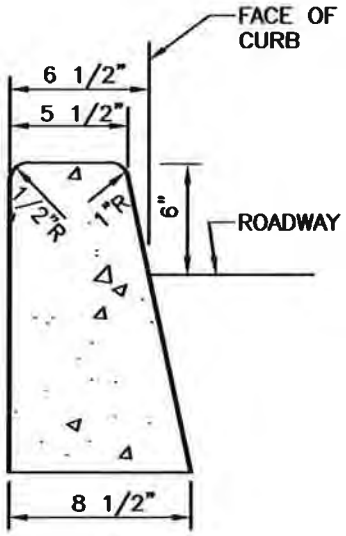


CEMENT CONCRETE TRAFFIC CURB

CITY OF GRANITE FALLS

CONCRETE CURBS

APPROVED: Warren W Rubio

DATE: 10/18/2016

DWG. NO. CG-1

L:\GrFalls\15484 PW Stds\Road Dt\CG-1.dwg, 10/18/2016 4:40 PM, RUSSELL HORITA

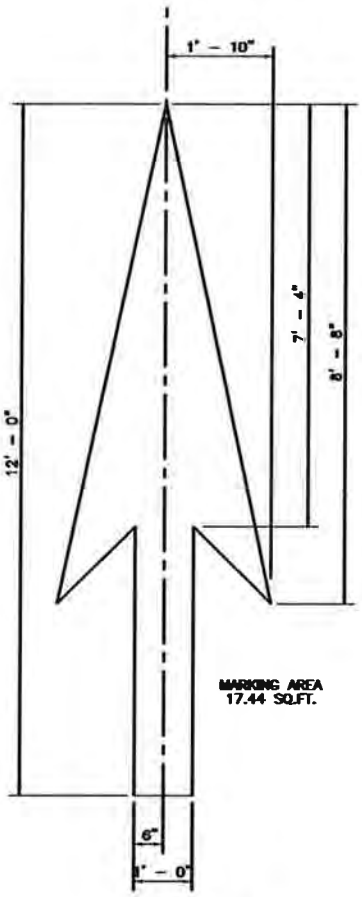


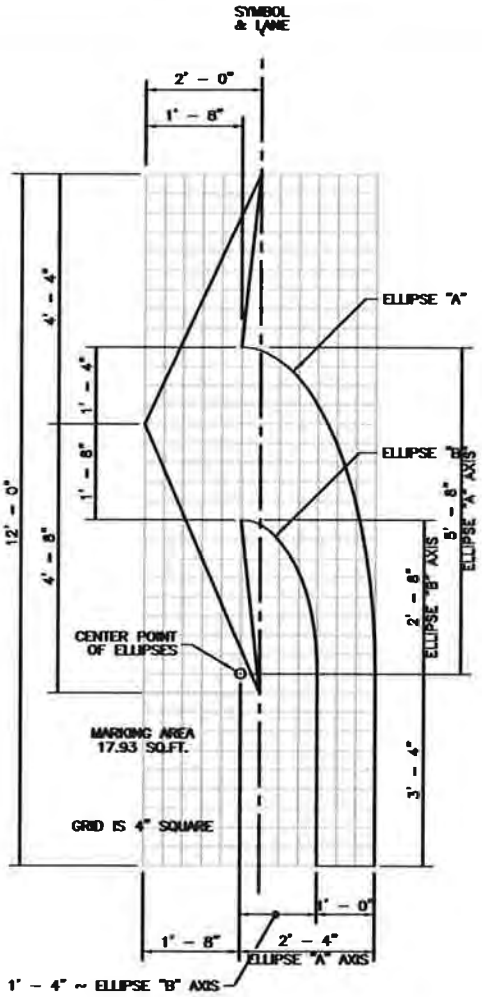


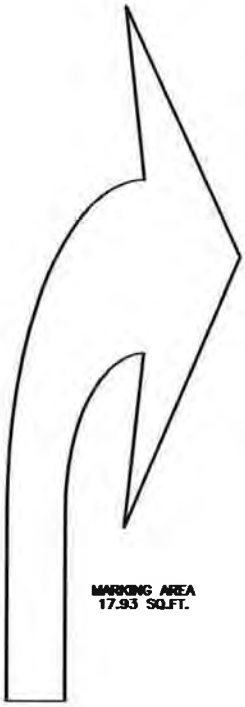


NOTES:

1. PAVEMENT MARKING SHALL BE TYPE B – PRE–FORMED FUSED THERMOPLASTIC

CITY OF GRANITE FALLS

TURN ARROW DETAILS

APPROVED: Warren W Perkins

DATE: 10/18/2016

DWG. NO. CHAN-1

L:\GrFalls\15484 PW Stds\Road Dtl\CHAN-1.dwg, 10/31/2016 3:42 PM, WARREN PERKINS

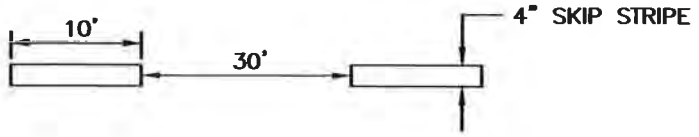


SKIP CENTERLINE STRIPE

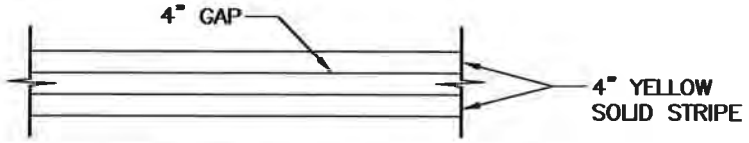


DOUBLE YELLOW CENTERLINE STRIPE

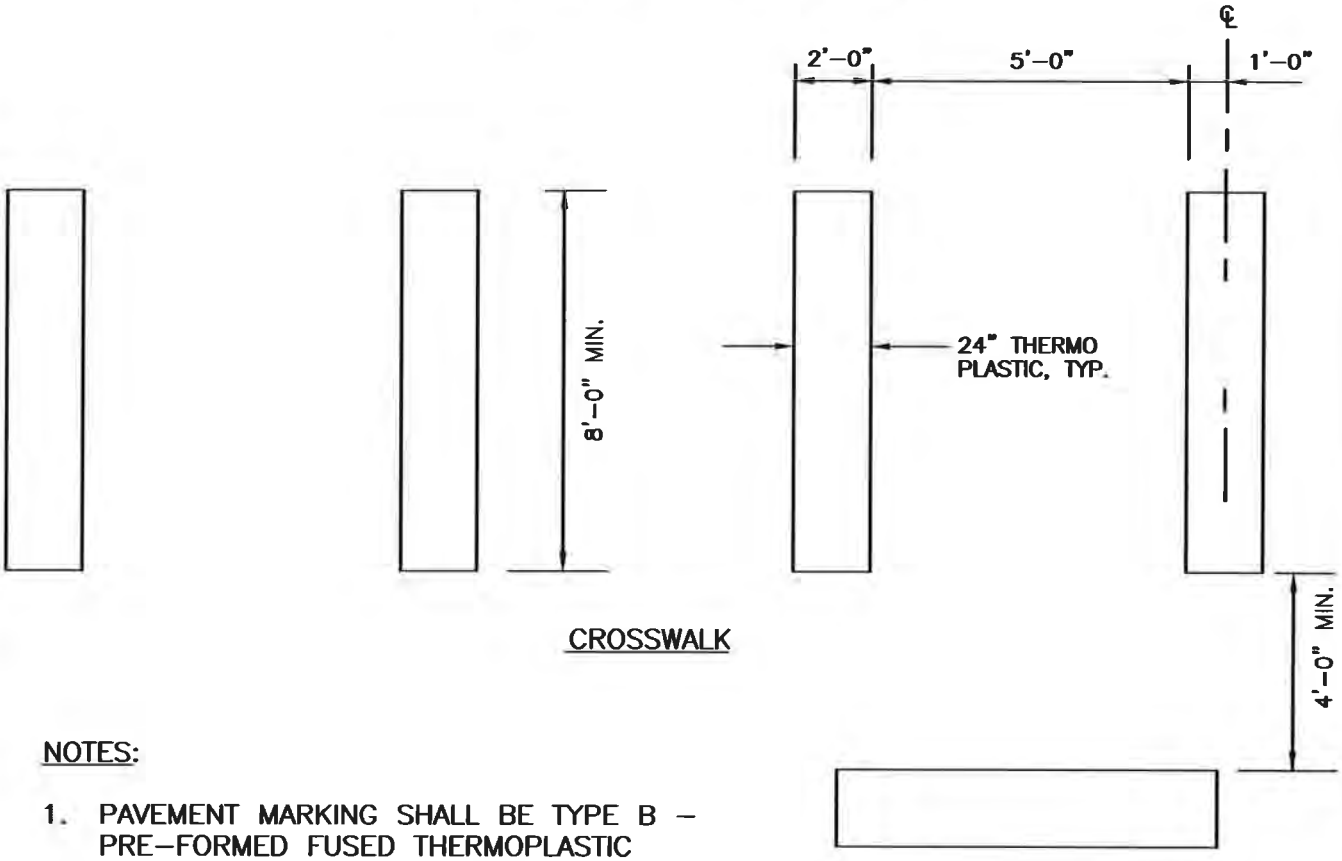


CROSSWALK

STOP BAR

NOTES:

1. PAVEMENT MARKING SHALL BE TYPE B – PRE-FORMED FUSED THERMOPLASTIC

CITY OF GRANITE FALLS

PAVEMENT MARKINGS

APPROVED: Warren W. Perkins

DATE: 10/18/2016

DWG. NO. CHAN-2

L:\GrFalls\15484 PW Stds\Road Dtl\CHAN-2.dwg, 10/31/2016 3:45 PM, WARREN PERKINS

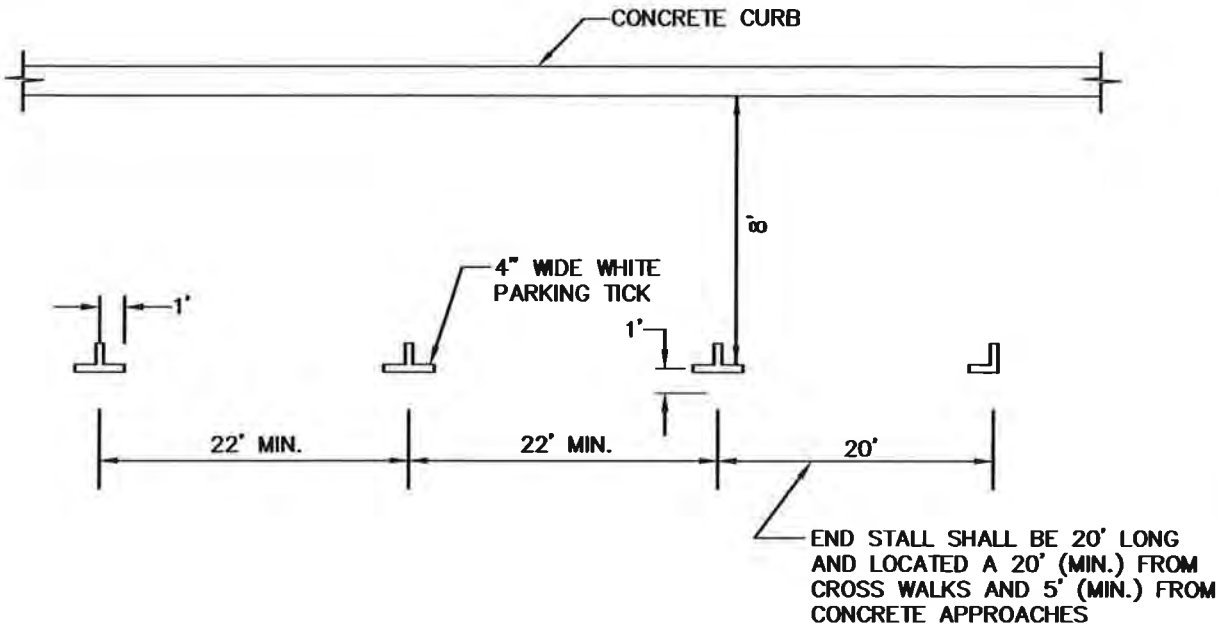


PARALLEL PARKING SPACE MARKING

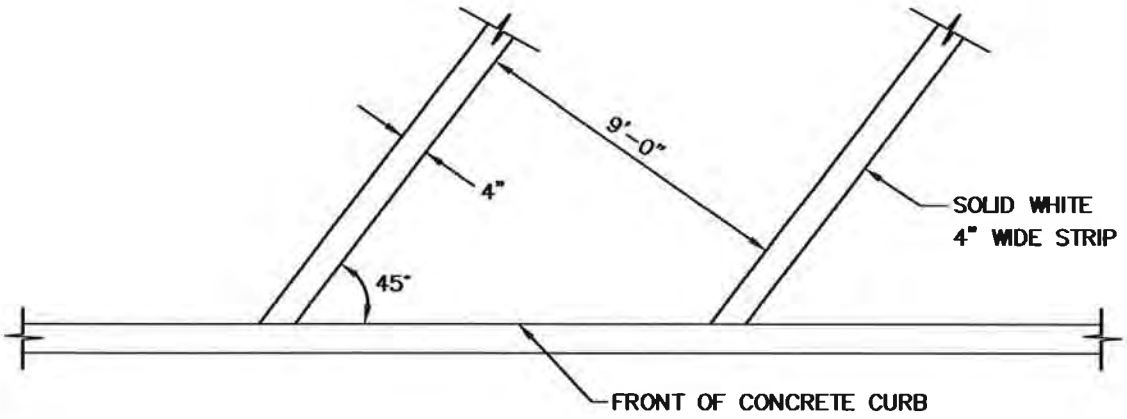


ANGLE PARKING SPACE MARKING

NOTES:

1. PAVEMENT MARKING SHALL BE TYPE B – PRE-FORMED FUSED THERMOPLASTIC

CITY OF GRANITE FALLS

PARKING SPACE MARKINGS

APPROVED: Warren A Perkins

DATE: 10/18/2016

DWG. NO. CHAN-3

L:\GrFalls\15484 PW Stds\Road Dt\CHAN-3.dwg, 1/3/2017 9:50 AM, WARREN PERKINS

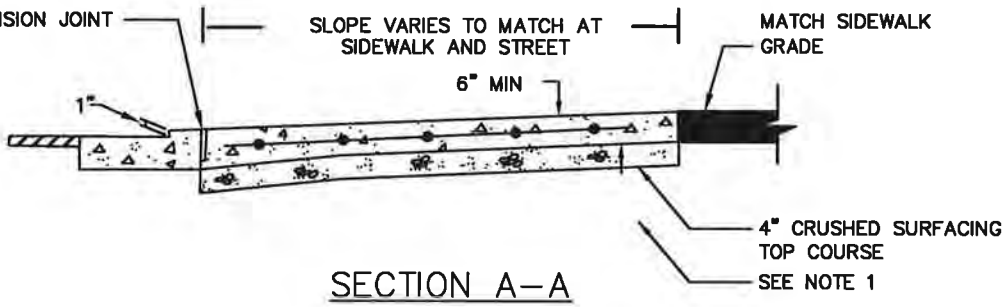


SECTION A–A

NOTES:

1. WELDED WIRE FABRIC (6"x6"4.0 WIDxWID WWF) REQUIRED FOR ALL COMMERCIAL DRIVEWAY APPROACHES. FABRIC PLACED AT MID DEPTH IN CONCRETE.
2. BROOM FINISH SHALL BE PARALLEL TO ROADWAY WITHIN DRIVEWAY ONLY.
3. JOINTS SHALL BE STEEL TROWELED FOR FINISH.
4. CONCRETE SHALL BE CLASS 4000.
5. IF DRIVEWAY WIDTH EXCEEDS 15 FEET, ADD EXPANSION JOINT AT CENTERLINE OF DRIVEWAY.

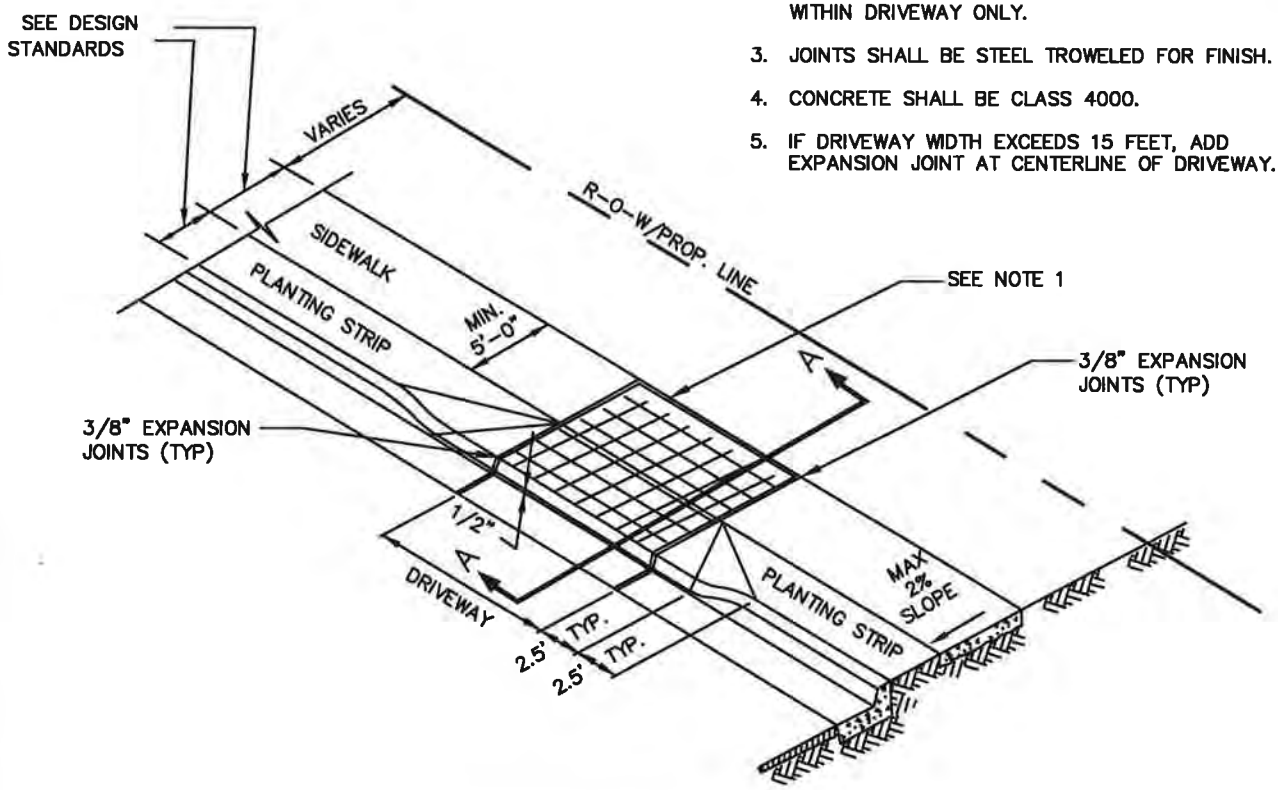


CEMENT CONCRETE DRIVEWAY
WITH PLANTER STRIP

CITY OF GRANITE FALLS

CEMENT CONCRETE DRIVEWAY
(WITH PLANTER)

APPROVED: Warren W Perkins

DATE: 8/31/17

DWG. NO.
DW-1

L:\GrFalls\15484 PW Stds\Road Dtl\DW-1.dwg, 9/1/2017 9:41 AM, BRUCE SHELDON

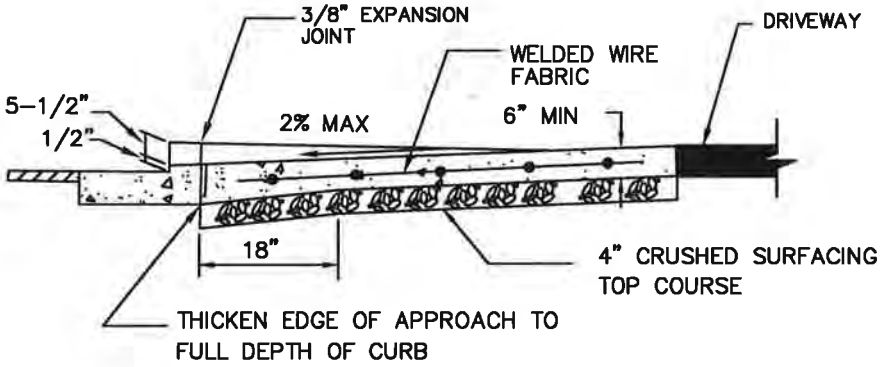


## SECTION A-A

NOTES:

1. WELDED WIRE FABRIC (6"x6"4.0 WIDxWID WWF) REQUIRED FOR ALL COMMERICAL DRIVEWAY APPROACHES. FABRIC PLACED AT MID DEPTH IN CONCRETE.
2. BROOM FINISH SHALL BE PARALLEL TO ROADWAY WITHIN DRIVEWAY ONLY.
3. JOINTS SHALL BE STEEL TROWELED FOR FINISH.
4. CONCRETE SHALL BE CLASS 4000.

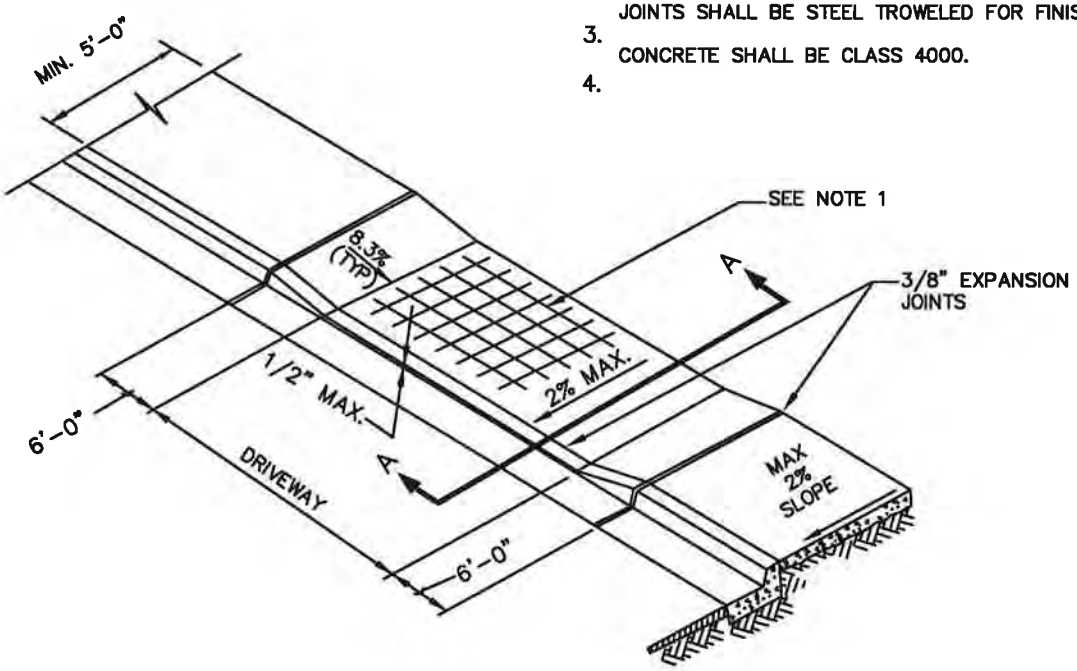


## CEMENT CONCRETE DRIVEWAY
## NO PLANTER STRIP

| | |
|---|---|
| CITY OF GRANITE FALLS<br>CEMENT CONCRETE DRIVEWAY<br>(NO PLANTER STRIP) | |
| APPROVED: Warren W Perkins<br>DATE: 8/31/17 | DWG. NO.<br>DW-2 |

L:\GrFalls\15484 PW Stds\Road Dtl\DW-2.dwg, 9/1/2017 9:45 AM, BRUCE SHELDON

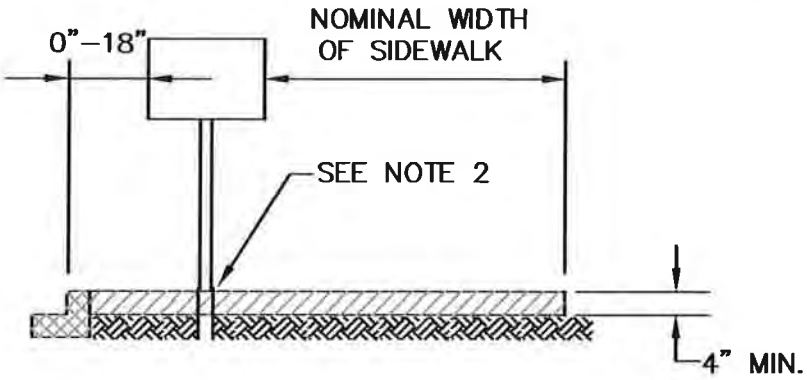


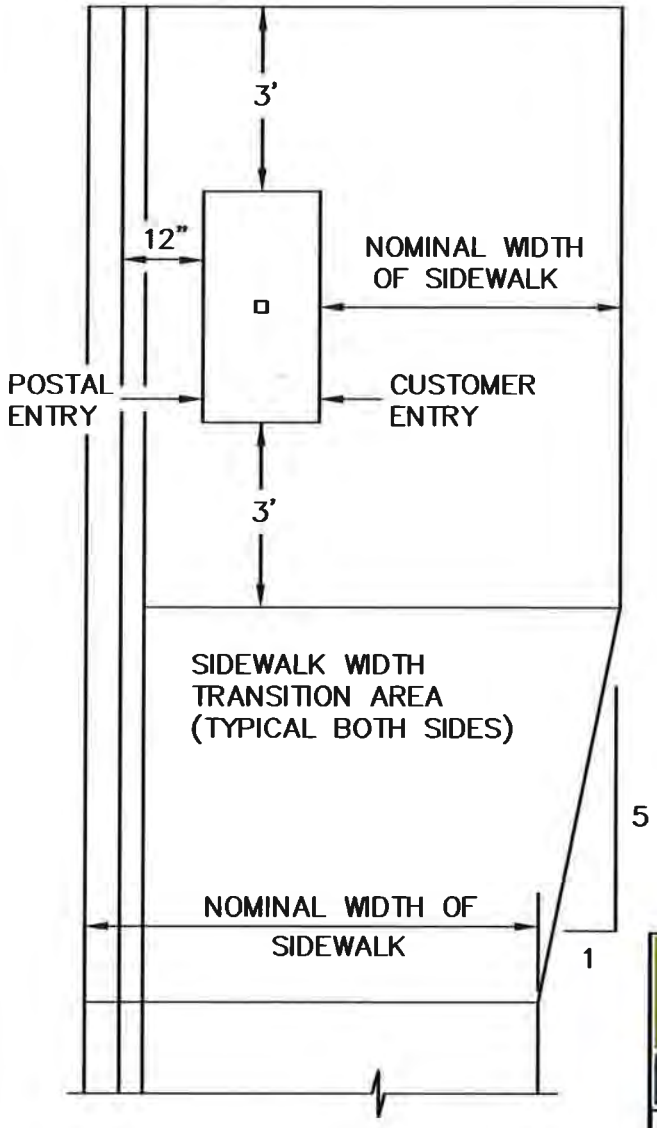


GENERAL NOTES:

1. SEE SECTION 5.23 OF PUBLIC WORKS STANDARDS FOR ADDITIONAL REQUIREMENTS.
2. PROVIDE REINFORCED GALVANIZED SLEEVE PLANTED FIRMLY IN GROUND AND THROUGH SIDEWALL (USE JOINT FILLER AROUND SLEEVE).

CITY OF GRANITE FALLS

MAILBOX DETAIL

APPROVED: Warren Parker

DATE: 10/18/2016

DWG. NO.
ML-1

L:\GrFalls\15484 PW Stds\Road Dtl\ML-1.dwg, 10/18/2016 4:41 PM, RUSSELL HORITA

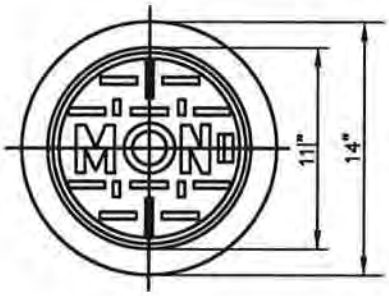


MONUMENT COVER

NOTES:

1. MACHINE BEARING FACES OF COVER AND CASE TO INSURE POSITIVE FIT.
2. MATERIAL SHALL CONFORM TO THE CURRENT VERSION OF THE "STANDARD SPECIFICATIONS FOR ROAD, BRIDGE AND MUNICIPAL CONSTRUCTION" PREPARED BY THE WASHINGTON STATE DEPT. OF TRANSPORTATION AND AMERICAN PUBLIC WORKS ASSOCIATION, WASHINGTON STATE CHAPTER.
3. SEE SECTION 5.22 OF THE PUBLIC WORKS STANDARDS.
4. MONUMENT BASE SHALL BE SQUARE 4"x4" TOP; 6"x6" BOTTOM; 24" LENTH.

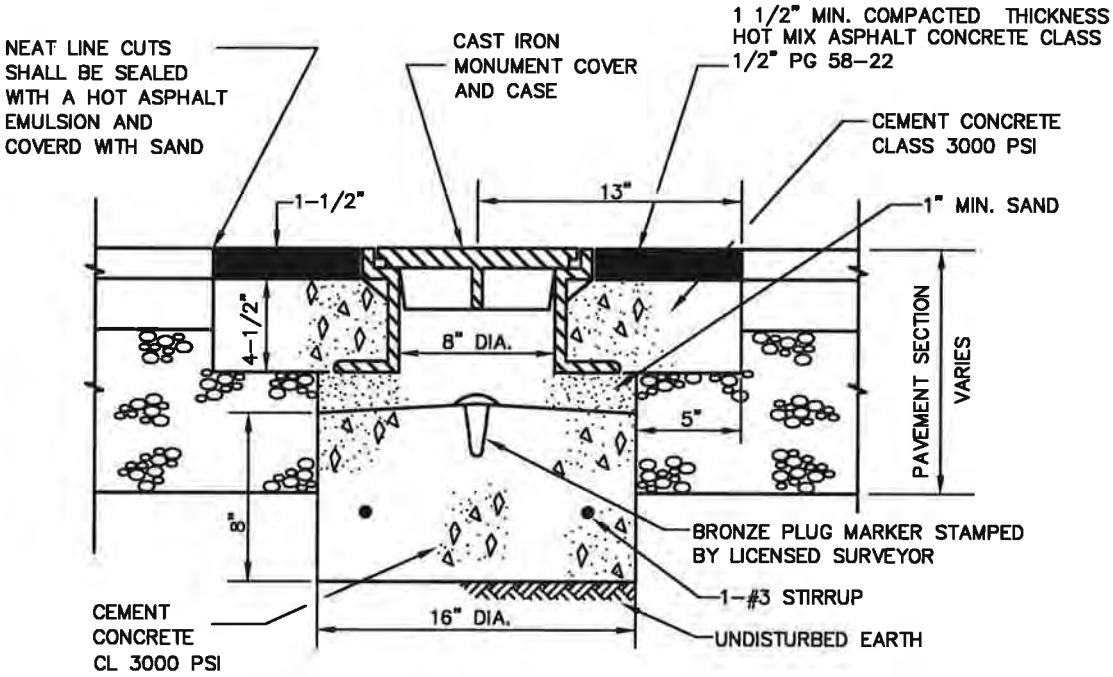


POURED MONUMENT IN PLACE

CITY OF GRANITE FALLS

POURED MONUMENT IN PLACE

APPROVED: Warren W Perkins

DATE: 8/31/17

DWG. NO. MON-1

L:\Graphics\15484 PW Stds\Road Dtl\MON-1.dwg, 9/1/2017 9:44 AM, BRUCE SHELDON

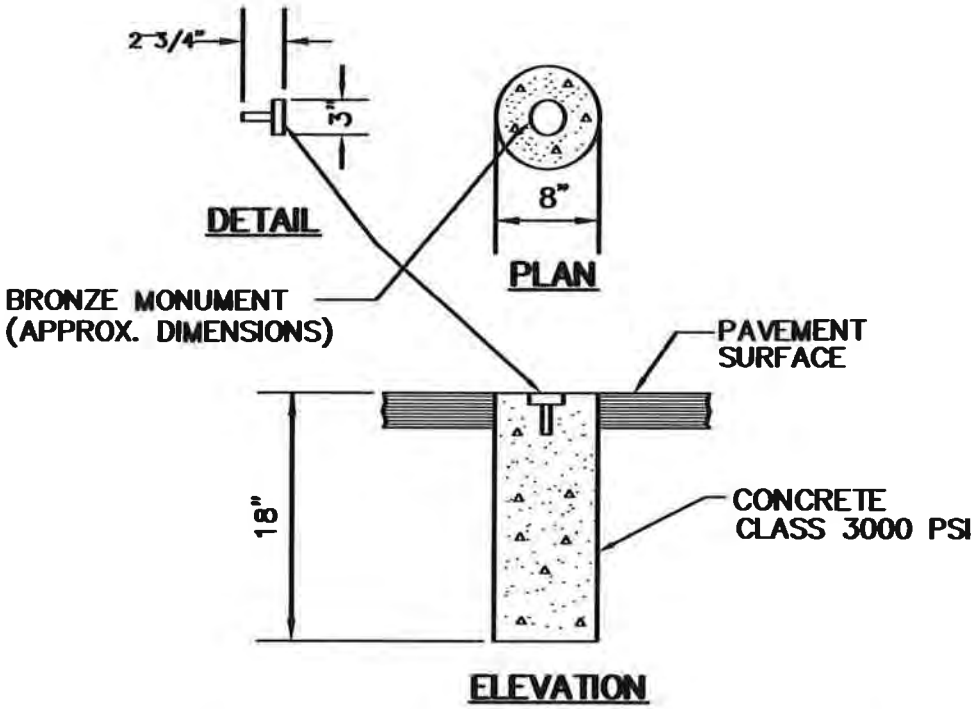


**NOTE:**

1. THE HOLE FOR THE MONUMENT SHALL BE CUT AFTER THE NEW PAVEMENT HAS BEEN CONSTRUCTED. THE UPPER 3" OF THE MONUMENT ENCASEMENT SHALL BE SHAPED TO A TRUE DIAMETER OF 8-INCH. CLASS 3000 PSI CONCRETE SHALL BE USED FOR ENCASEMENT. THE BRONZE MONUMENT WILL BE SET SIMULTANEOUSLY WITH THE POURING OF CONCRETE IN THE ENCASEMENT.
2. SURFACE MONUMENT WILL GENERALLY NOT BE ACCEPTED BUT WILL BE EVALUATED, UPON REQUEST, ON A CASE BY CASE BASIS.

| | |
|---|---|
| CITY OF GRANITE FALLS<br>**SURFACE MONUMENT** | |
| APPROVED: Warren W Ruks<br>DATE: 10/18/2016 | DWG. NO.<br>SURF-MON |

L:\GrFalls\15484 PW Stds\Road Dtl\SURF-MON.dwg, 10/18/2016 4:42 PM, RUSSELL HORITA

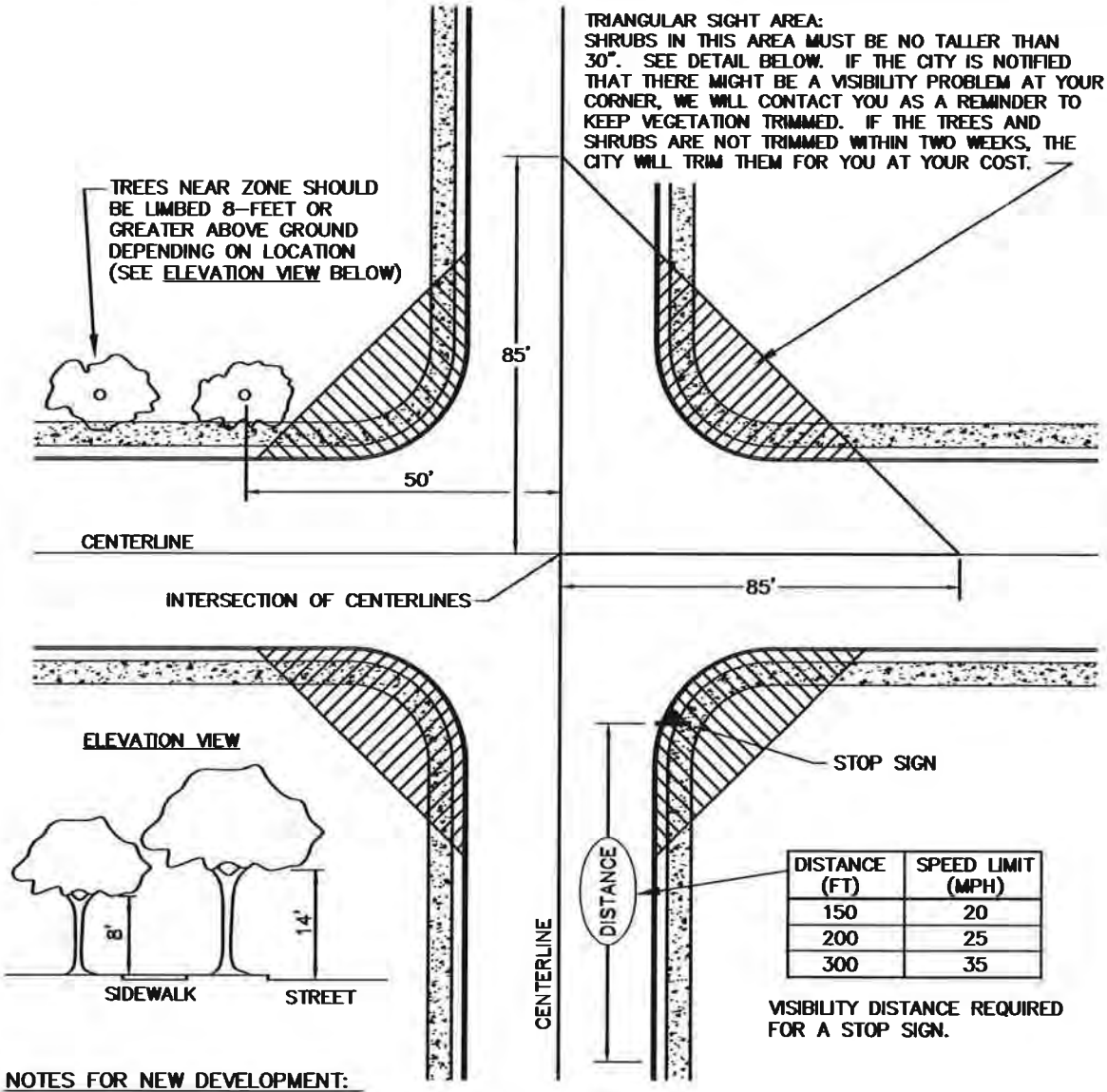


| DISTANCE (FT) | SPEED LIMIT (MPH) |
|---|---|
| 150 | 20 |
| 200 | 25 |
| 300 | 35 |

## NOTES FOR NEW DEVELOPMENT:

1. TREES SHALL NOT BE PLACED IN SUCH A WAY THAT THEY IMPEDE THE SAFE FLOW OF TRAFFIC BY BLOCKING THE VIEW OF TRAFFIC SIGNS, AND/OR IMPEDE PEDESTRIANS AND VEHICLES. ABOVE ARE CITY VISIBILITY STANDARDS.
2. LANDSCAPER SHALL COORDINATE WITH SIGN INSTALLER TO ASSURE NO CONFLICT BETWEEN THE TWO WILL BE CREATED.

## NOTES FOR EXISTING VEGETATION:

1. OVERGROWN VEGETATION IMPEDES THE SAFE FLOW OF TRAFFIC WHEN IT BLOCKS THE VIEW OF TRAFFIC SIGNS, PEDESTRIANS AND OTHER VEHICLES. IF EXISTING VEGETATION IS BLOCKING VISIBILITY IN THE STREET OR AN INTERSECTION, IT IS THE RESPONSIBILITY OF THE ADJACENT PROPERTY OWNER OR RESIDENT TO TRIM THE VEGETATION. ABOVE ARE CITY VISIBILITY STANDARDS.
2. TO ENSURE SAFE PASSAGE FOR EVERYONE, TREE LIMBS OVER STREETS MUST BE LIMBED UP 14 FEET. LIMBS OVER SIDEWALKS MUST BE LIMBED UP 8 FEET.

CITY OF GRANITE FALLS

**SIGHT DISTANCE (1 OF 2)**

APPROVED: Warren A. Perkins

DATE: 10/18/2016

DWG. NO. SIGHT-DI

L:\GrFalls\15484 PW Stds\Road Dtl\SIGHT-DI.dwg, 1/3/2017 10:45 AM, WARREN PERKINS

ENTERING SIGHT DISTANCE

ENTERING SIGHT DISTANCE MUST EXCEED THOSE SHOWN BELOW FOR THE LEGAL SPEED LIMIT. SUFFICIENT SIGHT DISTANCE IN EACH DIRECTION ALONG A CITY STREET OR ROAD FROM A SIDE STREET, ROAD OR MAJOR DRIVEWAY APPROACH MUST BE PROVIDED TO PERMIT VEHICLES TO SAFELY ENTER THE ROADWAY.

THE FOLLOWING SPEEDS AND ENTERING SIGHT DISTANCE REQUIREMENTS WILL BE APPLICABLE UNLESS UNUSUAL DESIGN OR SAFETY CONSIDERATIONS WARRANT INCREASED SIGHT DISTANCE REQUIREMENTS AS DETERMINED BY THE CITY ENGINEER.

| POSTED/LEGAL SPEED (MPH) | ENTERING SIGHT DISTANCE (FEET) |
|---|---|
| 25 | 250 |
| 30 | 300 |
| 35 | 350 |
| 40 | 400 |

1. ENTERING VEHICLE EYE HEIGHT = 3.50 FEET
2. APPROACHING VEHICLE HEIGHT = 4.25 FEET
3. MAXIMUM ROAD GRADE:
   MAJOR AND MINOR ARTERIALS 8%
   COLLECTOR, LOCAL, AND MINOR ACCESS 15%
4. THE SIGHT DISTANCE IS MEASURED FROM A POINT IN THE APPROACH 10 FEET BACK FROM THE EDGE OF THE TRAVELED ROADWAY AT A VERTICAL HEIGHT OF 3.50 FEET.

CITY OF GRANITE FALLS

SIGHT DISTANCE (2 OF 2)

APPROVED: Warren W. Perkins

DATE: 10/18/2016

DWG. NO. SIGHT-DI

L:\GrFalls\15484 PW Stds\Road Dtl\SIGHT-DI.dwg, 1/3/2017 10:46 AM, WARREN PERKINS

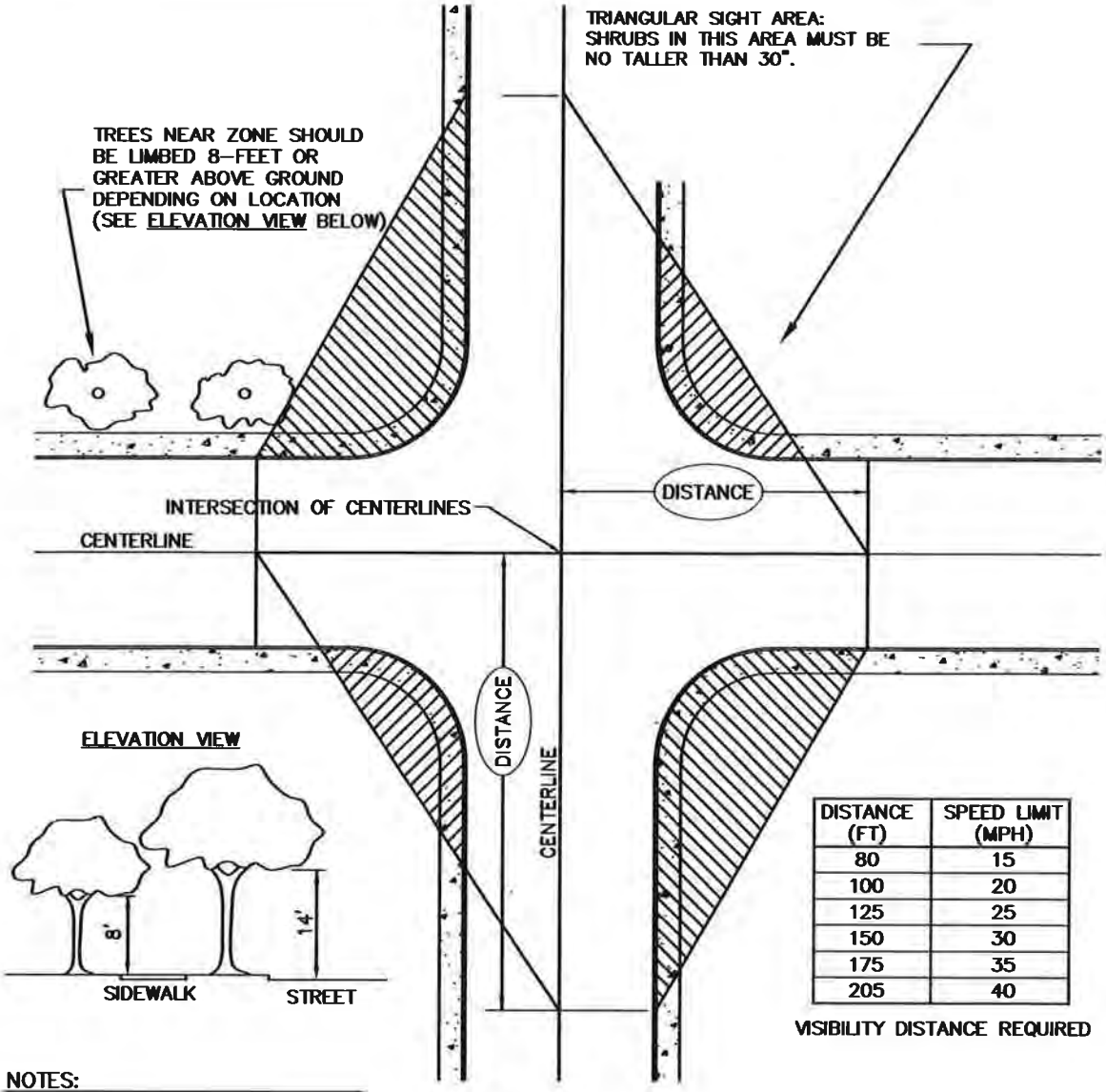


| DISTANCE (FT) | SPEED LIMIT (MPH) |
|---|---|
| 80 | 15 |
| 100 | 20 |
| 125 | 25 |
| 150 | 30 |
| 175 | 35 |
| 205 | 40 |

VISIBILITY DISTANCE REQUIRED

NOTES:

1. TREES SHALL NOT BE PLACED IN SUCH A WAY THAT THEY IMPEDE THE SAFE FLOW OF TRAFFIC BY BLOCKING THE VIEW OF TRAFFIC SIGNS, AND/OR IMPEDE PEDESTRIANS AND VEHICLES.
2. A DISTANCE ADJUSTMENT FACTOR SHALL BE APPLIED WHEN SLOPE EXCEEDS 6%.
3. DISTANCE AS MEASURED ALONG THE CENTERLINE OF THE ROAD PER THE SPEED LIMIT ON EACH ROAD.

NOTES FOR EXISTING VEGETATION:

1. OVERGROWN VEGETATION IMPEDES THE SAFE FLOW OF TRAFFIC WHEN IT BLOCKS THE VIEW OF TRAFFIC SIGNS, PEDESTRIANS AND OTHER VEHICLES. IF EXISTING VEGETATION IS BLOCKING VISIBILITY IN THE STREET OR AN INTERSECTION, IT IS THE RESPONSIBILITY OF THE ADJACENT PROPERTY OWNER OR RESIDENT TO TRIM THE VEGETATION.
2. TO ENSURE SAFE PASSAGE FOR EVERYONE, TREE LIMBS OVER STREETS MUST BE LIMBED UP 14 FEET. LIMBS OVER SIDEWALKS MUST BE LIMBED UP 8 FEET.

SOURCE:
A POLICY ON GEOMETRIC DESIGN OF HIGHWAYS AND STREETS, 2011

CITY OF GRANITE FALLS

**SIGHT DISTANCE UNCONTROLLED INTERSECTION**

APPROVED: Warren W. Parks

DATE: 10/18/2016

DWG. NO. SIGHT-DI-UC

L:\GrFalls\15484 PW Stds\Road Dtl\SIGHT-DI-UC.dwg, 10/18/2016 4:42 PM, RUSSELL HORITA

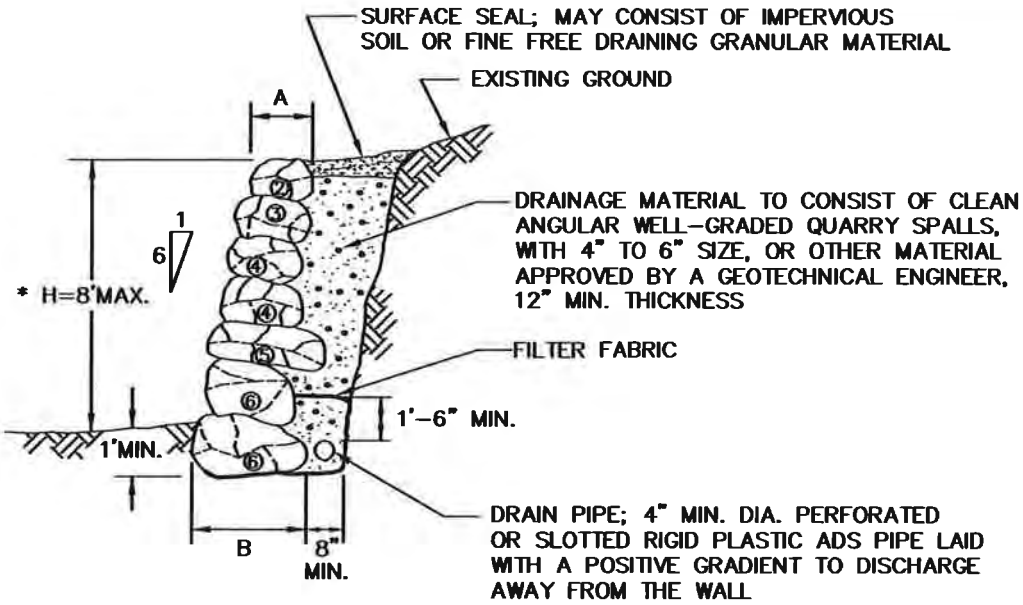


## SECTION

| SIZE | APPROXIMATE WEIGHT – LBS. | APPROXIMATE DIAMETER |
|---|---|---|
| 1 MAN | 50–200 | 12"– 18" |
| 2 MAN | 200–700 | 18"– 28" |
| 3 MAN | 700–2000 | 28"– 36" |
| 4 MAN | 2000–4000 | 36"– 48" |
| 5 MAN | 4000–6000 | 48"– 54" |
| 6 MAN | 6000–8000 | 54"– 50" |

* NOTE:
4' MIN. HIGH CYCLONE FENCE REQUIRED ABOVE WALL WHEN WALL HEIGHT IS 3' OR GREATER

NOTE:
WALLS OVER 8 FEET HIGH IN CUT SLOPE, 30 INCHES HIGH IN FILL SLOPE OR IN UNSTABLE SOILS SHALL BE DESIGNED BY AN ENGINEER LICENSED IN THE STATE OF WASHINGTON

| H | B | A | REVISIONS |
|---|---|---|---|
| 6'– 0" OR LESS | 3'– 0" | 2'– 0" | |
| 6'– 0' H≤ 8'– 0" | 4'– 4" | 3'– 0" | |

## ROCKERY SCHEDULE

# ROCK WALL DETAIL

CITY OF GRANITE FALLS

ROCK WALL DETAIL

APPROVED: Warren W. Parks

DATE: 10/18/2016

DWG. NO.
RKWL

L:\GrFalls\15484 PW Stds\Road Dt\RKWL.dwg, 10/18/2016 4:43 PM, RUSSELL HORITA

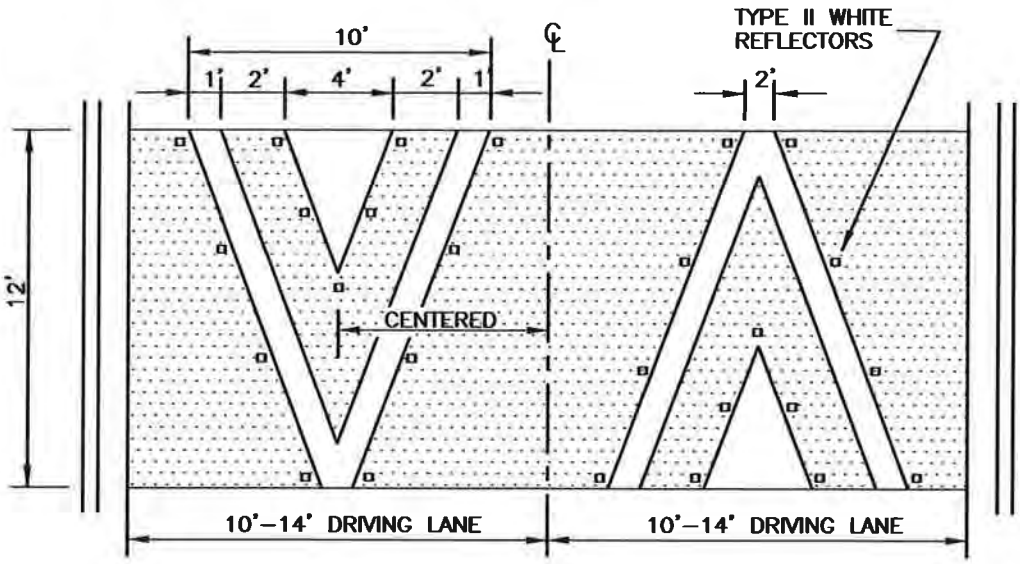


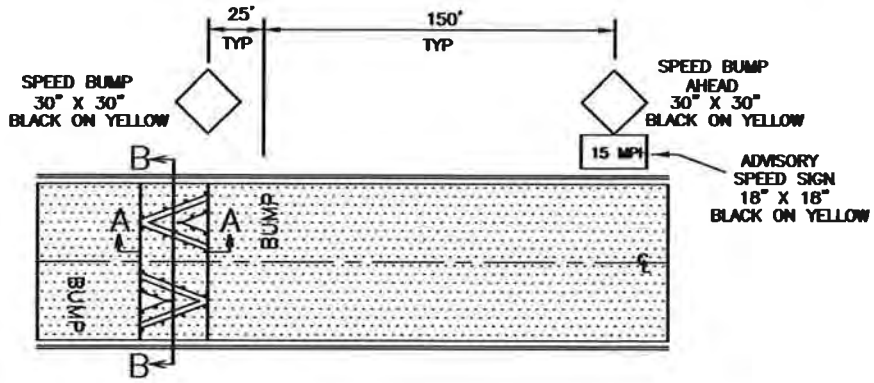


SECTION A–A

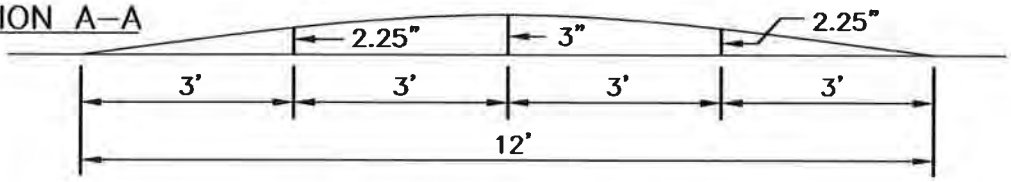


SECTION B–B

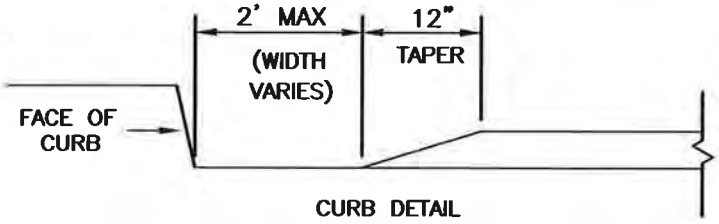


CURB DETAIL

## NOTES

1. SIGN AND LEGEND LOCATION SHALL BE VERIFIED BY THE ENGINEER PRIOR TO INSTALLATION.
2. LEGEND AND V MARKINGS TO BE TYPE B – PRE-FORMED FUSED THERMOPLASTIC.

# CITY OF GRANITE FALLS

SPEED HUMP: DESIGN, PAVEMENT MARKING, AND SIGNING

APPROVED: Warren W Perkins

DATE: 10/18/2016

DWG. NO. SPD-HUMP

L:\GrFalls\15484 PW Stds\Road Dt\SPD-HUMP.dwg, 12/5/2016 12:22 PM, WARREN PERKINS

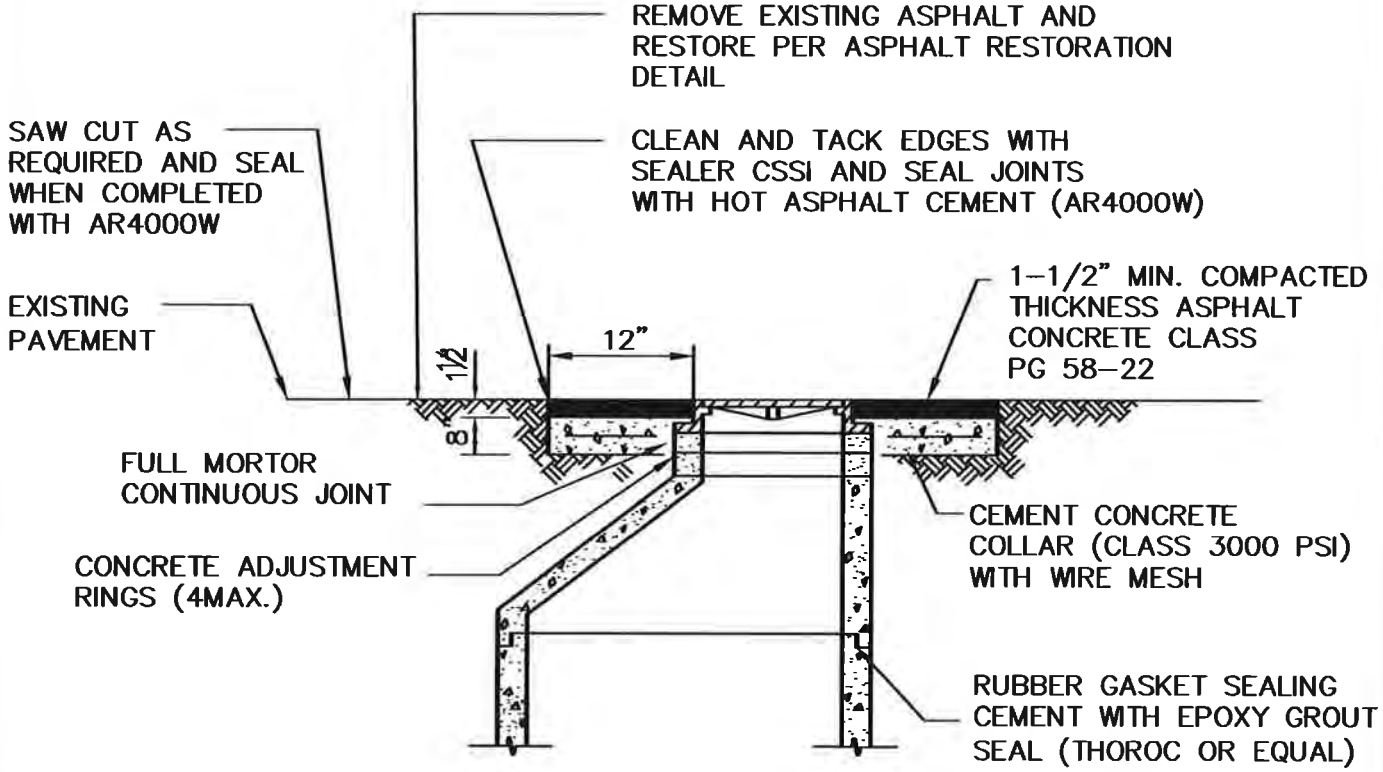


NOTE:

CEMENT CONCRETE COLLAR TO BE 12 INCHES IN THICKNESS ON DESIGNATED TRUCK ROUTES

CITY OF GRANITE FALLS

MANHOLE, OR CATCH BASIN (TYPE II) GRADE ADJUSTMENT DETAIL

APPROVED: Warren W Ruks

DATE: 10/18/2016

DWG. NO. STOM-2

L:\GrFalls\15484 PW Stds\Road Dtl\STOM-2.dwg, 10/18/2016 4:43 PM, RUSSELL HORITA

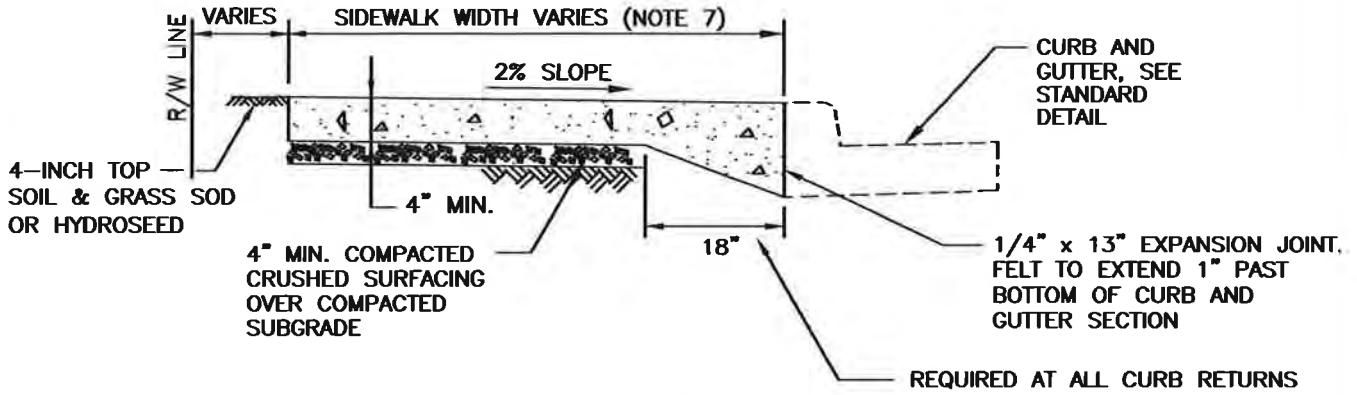


SECTION

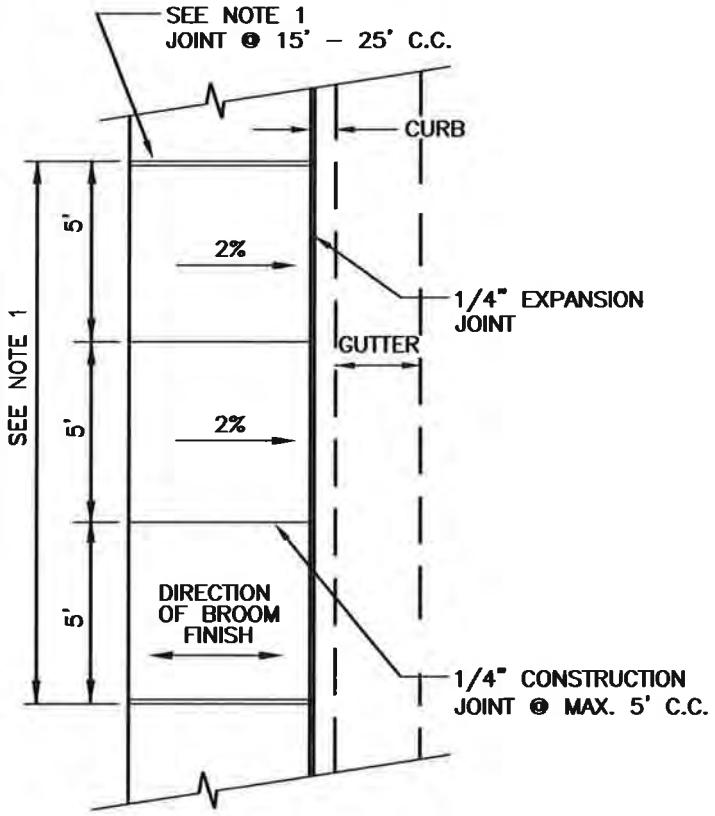


PLAN

NOTES:

1. CONTRACTION JOINTS SHALL BE 3/8" x 1 1/2" ASPHALT SATURATED FELT PLACED at 15' - 25' O.C.
2. THRU JOINTS SHALL BE 3/8" x 4" ASPHALT SATURATED FELT PLACED AT DRIVEWAYS, ALLEY RETURNS AND ADA RAMPS AND RADIUSES.
3. V-GROOVEMARKS SHALL BE 1/8" DEEP AND 1/4" WIDE PLACED AT 5' O.C. FOR 5' SIDEWALKS AND 7 1/2' O.C. FOR 8' SIDEWALKS.
4. ALL JOINTS SHALL BE CLEAN AND EDGED TO A 1/4" RADIUS. JOINTS SHALL BE FLUSH WITH THE FINISHED SURFACE.
5. ALL UTILITY POLES AND STREET SIGN POSTS IN SIDEWALK AREA NOT REQUIRED TO BE RELOCATED BY THE CITY ENGINEER SHALL HAVE A SQUARE SECTION OF CONCRETE SURROUNDED BY 3/8" EXPANSION JOINT MATERIAL AROUND THE POLE. THE JOINT SHALL BE NO CLOSER THAN 6" TO ANY SIDE OF THE POLE.
6. FORMS SHALL BE EITHER WOOD OR STEEL AND SHALL MEET ALL REQUIREMENTS OF THESE SPECIFICATIONS.
7. CONCRETE SHALL BE CLASS 3000.

CITY OF GRANITE FALLS

SIDEWALK WITHOUT PLANTING STRIP

APPROVED: Warren W Perkins

DATE: 10/18/2016

DWG. NO. SW-1

L:\GrFalls\15484 PW Stds\Road Dt\SW-1.dwg, 12/5/2016 12:18 PM, WARREN PERKINS

MINIMUM SIDEWALK WIDTHS

| | |
|---|---|
| 5' | (R-2.3, R-9600, R-7200) SINGLE FAMILY RESIDENTIAL AREAS (DETACHED DWELLINGS) |
| 6' | (MR) MULTI-FAMILY RESIDENTIAL AREAS |
| 6' | (LI, I, IR) INDUSTRIAL AREAS |
| 6' | (GC, CBD ZONES) COMMERCIAL AREAS |

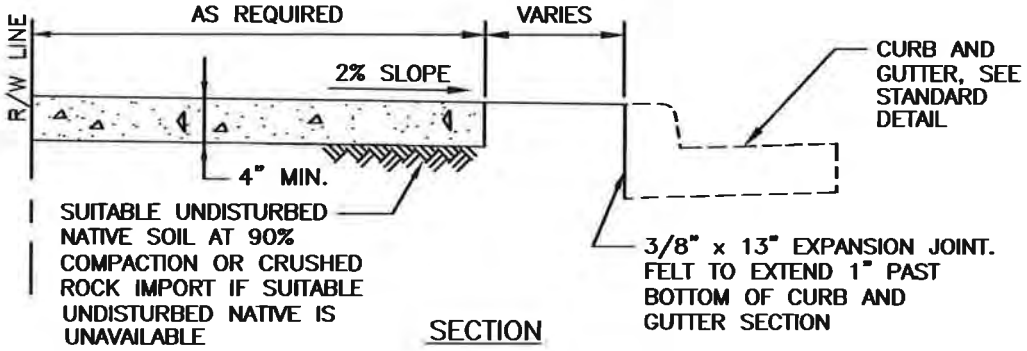


SECTION

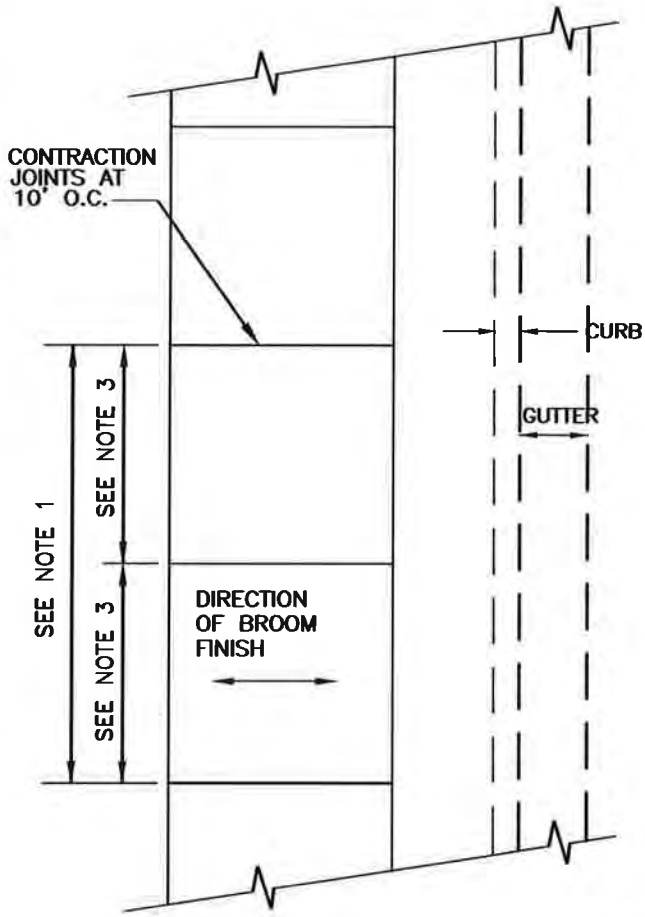


PLAN

NOTES:

1. CONTRACTION JOINTS SHALL BE 3/8" x 1 1/2" ASPHALT SATURATED FELT PLACED at 15' -25' O.C.
2. THRU JOINTS SHALL BE 3/8" x 4" ASPHALT SATURATED FELT PLACED AT DRIVEWAYS, ALLEY RETURNS AND ADA RAMPS AND RADIUSES.
3. V-GROOVEMARKS SHALL BE 1/8" DEEP AND 1/4" WIDE PLACED AT 5' O.C. FOR 5' SIDEWALKS AND 7 1/2' O.C. FOR 8' SIDEWALKS.
4. ALL JOINTS SHALL BE CLEAN AND EDGED TO A 1/4" RADIUS. JOINTS SHALL BE FLUSH WITH THE FINISHED SURFACE.
5. ALL UTILITY POLES AND STREET SIGN POSTS IN SIDEWALK AREA NOT REQUIRED TO BE RELOCATED BY THE CITY ENGINEER SHALL HAVE A SQUARE SECTION OF CONCRETE SURROUNDED BY 3/8" EXPANSION JOINT MATERIAL AROUND THE POLE. THE JOINT SHALL BE NO CLOSER THAN 6" TO ANY SIDE OF THE POLE.
6. FORMS SHALL BE EITHER WOOD OR STEEL AND SHALL MEET ALL REQUIREMENTS OF THESE SPECIFICATIONS.
7. CONCRETE SHALL BE CLASS 3000.

CITY OF GRANITE FALLS

SIDEWALK WITH PLANTING STRIP

APPROVED: Warren W. Perkins

DATE: 10/18/2016

DWG. NO. SW-1

L:\GrFalls\15484 PW Stds\Road Dt\SW-1.dwg, 12/5/2016 12:18 PM, WARREN PERKINS

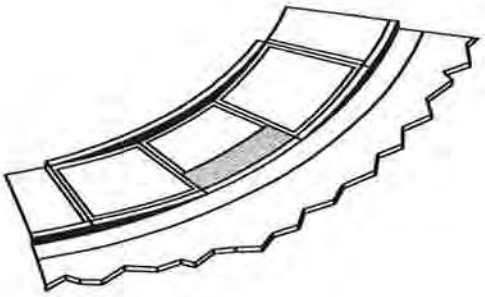

ISOMETRIC VIEW
TYPE PARALLEL A

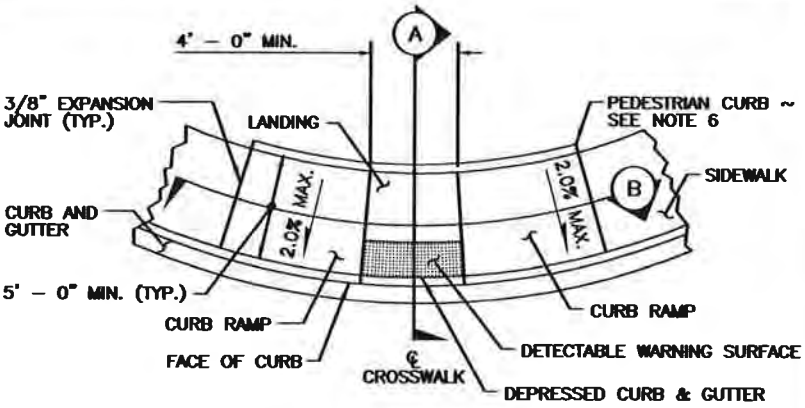


PLAN VIEW
TYPE PARALLEL A

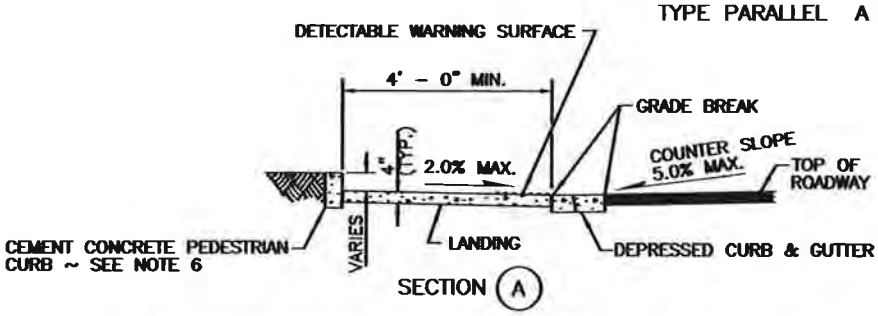


SECTION A

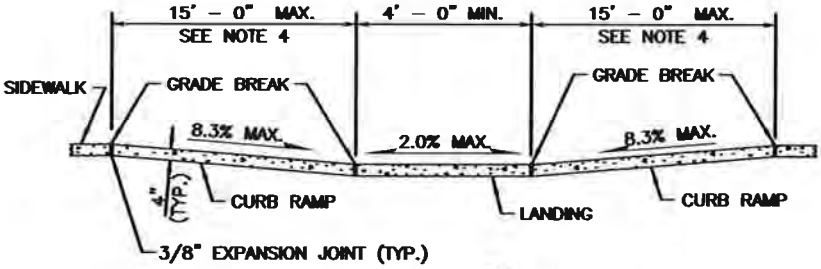


SECTION B

NOTES

1. CURB RAMP LOCATION SHALL BE PLACED WITHIN THE WIDTH OF THE ASSOCIATED CROSSWALK.
2. WHERE "GRADE BREAK" IS CALLED OUT, THE ENTIRE LENGTH OF THE GRADE BREAK BETWEEN THE TWO ADJACENT SURFACE PLANES SHALL BE FLUSH.
3. DO NOT PLACE GRATINGS, JUNCTION BOXES, ACCESS COVERS, OR OTHER APPURTENANCES IN FRONT OF THE CURB RAMP OR ON ANY PART OF THE CURB RAMP OR LANDING.
4. THE CURB RAMP MAXIMUM RUNNING SLOPE SHALL NOT REQUIRE THE RAMP LENGTH TO EXCEED 15 FEET TO AVOID CHASING THE SLOPE INDEFINITELY WHEN CONNECTING TO STEEP GRADES. WHEN APPLYING THE 15–FOOT MAX. LENGTH, THE RUNNING SLOPE OF THE CURB RAMP SHALL BE AS FLAT AS FEASIBLE.
5. CURB RAMP, LANDING, AND FLARES SHALL RECEIVE BROOM FINISH.
6. PEDESTRIAN CURB MAY BE OMITTED IF THE GROUND SURFACE AT THE BACK OF THE CURB RAMP AND/OR LANDING WILL BE AT THE SAME ELEVATION AS THE CURB RAMP OR LANDING AND THERE WILL BE NO MATERIAL TO RETAIN.
7. SUBGRADE AND FORM INSPECTION BY THE CITY SHALL BE REQUIRED PRIOR TO POURING CONCRETE.

LEGEND

SLOPE IN EITHER DIRECTION

NOTE:

CURB RAMPS SHALL MEET WSDOT DESIGN CRITERIA CURRENT AT THE TIME OF CONSTRUCTION.

CITY OF GRANITE FALLS

PARALLEL CURB RAMP

APPROVED: Warren W. Ruda

DATE: 10/18/2016

DWG. NO.
T-24A PARALLEL CURB

L:\GrFalls\15484 PW Stds\Road Dt\T-24a parallel curb.dwg, 10/18/2016 4:44 PM, RUSSELL HORITA

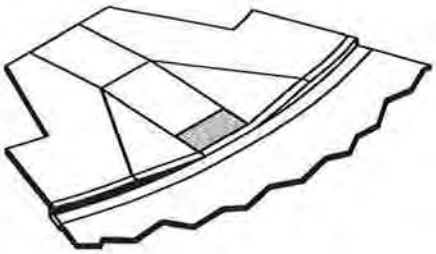

ISOMETRIC VIEW
TYPE PERPENDICULAR A

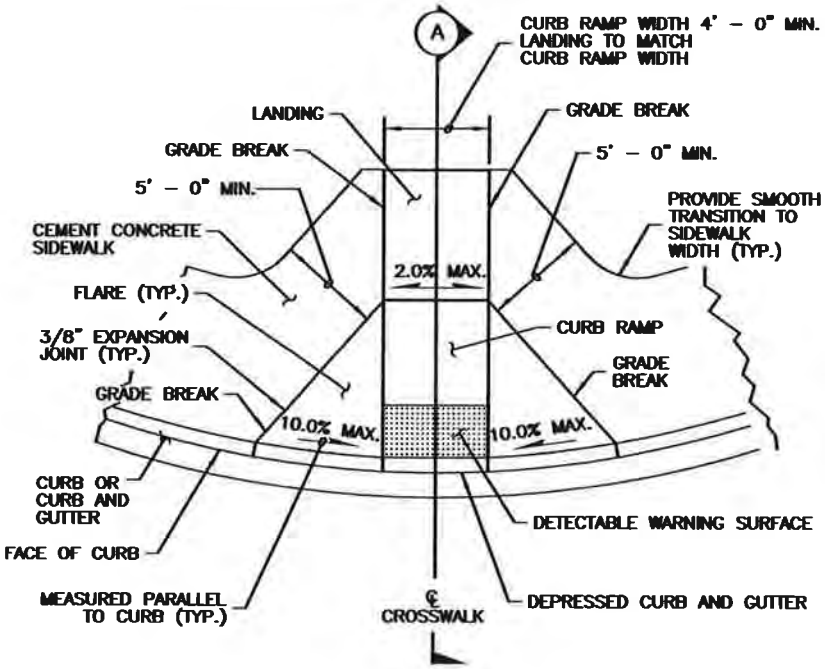


PLAN VIEW
TYPE PERPENDICULAR A

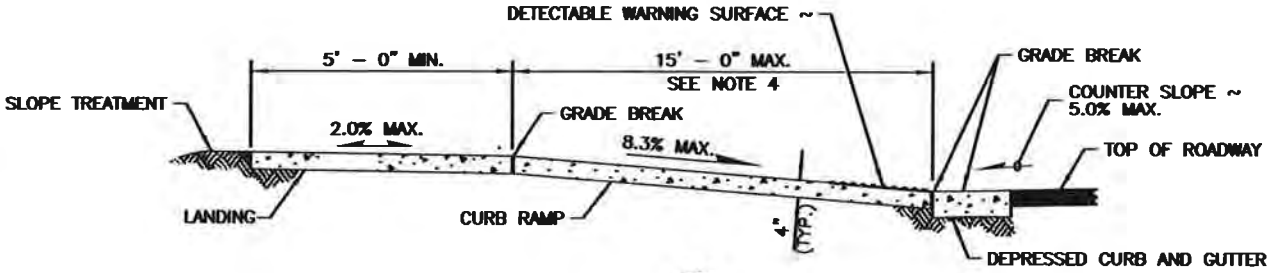


SECTION (A)

NOTES

1. PROVIDE A SEPARATE CURB RAMP FOR EACH MARKED OR UNMARKED CROSSWALK. CURB RAMP LOCATION SHALL BE PLACED WITHIN THE WIDTH OF THE ASSOCIATED CROSSWALK.
2. WHERE "GRADE BREAK" IS CALLED OUT, THE ENTIRE LENGTH OF THE GRADE BREAK BETWEEN THE TWO ADJACENT SURFACE PLANES SHALL BE FLUSH.
3. DO NOT PLACE GRATINGS, JUNCTION BOXES, ACCESS COVERS, OR OTHER APPURTENANCES IN FRONT OF THE CURB RAMP OR ON ANY PART OF THE CURB RAMP OR LANDING.
4. THE CURB RAMP MAXIMUM RUNNING SLOPE SHALL NOT REQUIRE THE RAMP LENGTH TO EXCEED 15–FEET TO AVOID CHASING THE SLOPE INDEFINITELY WHEN CONNECTING TO STEEP GRADES. WHEN APPLYING THE 15–FOOTMAXIMUM LENGTH, THE RUNNING SLOPE OF THE CURB RAMP SHALL AS FLAT AS FEASIBLE.
5. CURB RAMP, LANDING, AND FLARES SHALL RECEIVE BROOM FINISH.
6. SUBGRADE AND FORM INSPECTION BY THE CITY SHALL BE REQUIRED PRIOR TO POURING CONCRETE.

LEGEND

SLOPE IN EITHER DIRECTION

NOTE:

CURB RAMPS SHALL MEET WSDOT DESIGN CRITERIA CURRENT AT THE TIME OF CONSTRUCTION.

CITY OF GRANITE FALLS

PERPENDICULAR CURB RAMP

APPROVED: [signature]

DATE: 10/18/2016

DWG. NO.
T-24B PERP
CURB

L:\GrFalls\15484 PW Stds\Road Dt\T-24b perp curb.dwg, 10/18/2016 4:44 PM, RUSSELL HORITA

ISOMETRIC VIEW

TYPE SINGLE DIRECTION

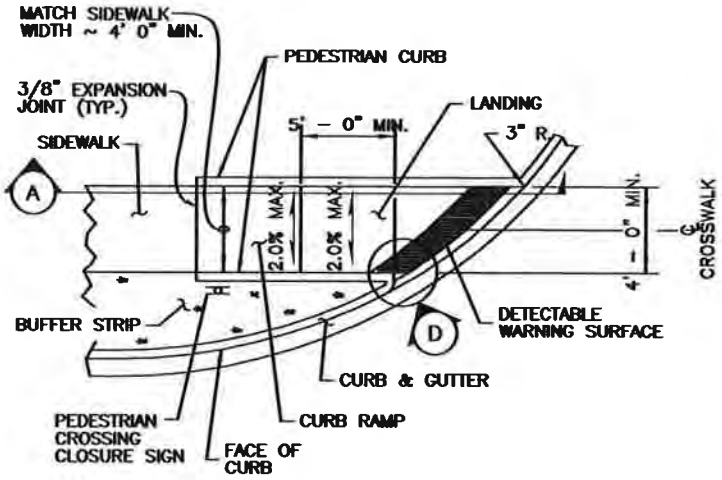


PLAN VIEW

TYPE SINGLE DIRECTION

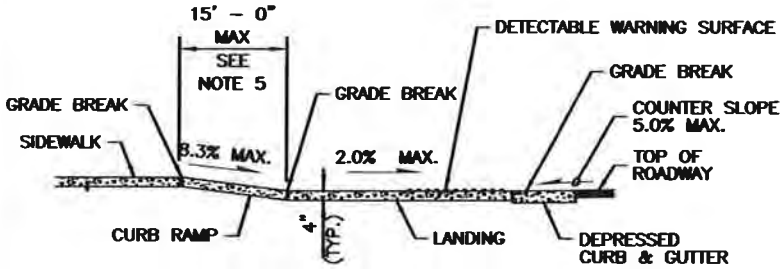


SECTION (A)

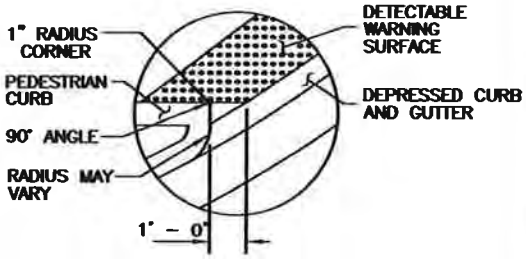


DETAIL (D)

NOTES

1. THIS PLAN IS TO BE USED WHERE PEDESTRIAN CROSSING IN ONE DIRECTION IS NOT PERMITTED.
2. CURB RAMP LOCATION SHALL BE PLACED WITHIN THE WIDTH OF THE ASSOCIATED CROSSWALK, OR AS SHOWN IN THE CONTRACT PLANS.
3. WHERE "GRADE BREAK" IS CALLED OUT, THE ENTIRE LENGTH OF THE GRADE BREAK BETWEEN THE TWO ADJACENT SURFACE PLANES SHALL BE FLUSH.
4. DO NOT PLACE GRATINGS, JUNCTION BOXES, ACCESS COVERS OR OTHER APPURTENANCES IN FRONT OF THE CURB RAMP OR ON ANY PART OF THE CURB RAMP OR LANDING.
5. CURB RAMP MAXIMUM RUNNING SLOPE SHALL NOT REQUIRE THE RAMP LENGTH TO EXCEED 15 FEET TO AVOID CHASING THE SLOPE INDEFINITELY WHEN CONNECTING TO STEEP GRADES. WHEN APPLYING THE 15 FOOT MAXIMUM LENGTH, THE RUNNING SLOPE OF THE CURB RAMP SHALL BE AS FLAT AS FEASIBLE.
6. CURB RAMPS AND LANDINGS SHALL RECEIVE BROOM FINISH.
7. PEDESTRIAN CURB MAY BE OMITTED IF THE GROUND SURFACE AT THE BACK OF THE CURB RAMP AND/OR LANDING WILL BE AT THE SAME ELEVATION AS THE CURB RAMP OR LANDING AND THERE WILL BE NO MATERIAL TO RETAIN.
8. SUBGRADE AND FORM INSPECTION BY THE CITY SHALL BE REQUIRED PRIOR TO POURING CONCRETE.

LEGEND

SLOPE IN EITHER DIRECTION

NOTE:

CURB RAMPS SHALL MEET WSDOT DESIGN CRITERIA CURRENT AT THE TIME OF CONSTRUCTION.

CITY OF GRANITE FALLS

SINGLE DIRECTION CURB RAMP

APPROVED: Warren Ter Pelkof

DATE: 10/18/2016

DWG. NO. T-24C SINGLE CURB

L:\GrFalls\15484 PW Stds\Road Dt\T-24c single curb.dwg, 10/18/2016 4:44 PM, RUSSELL HORITA

## PLAN VIEW

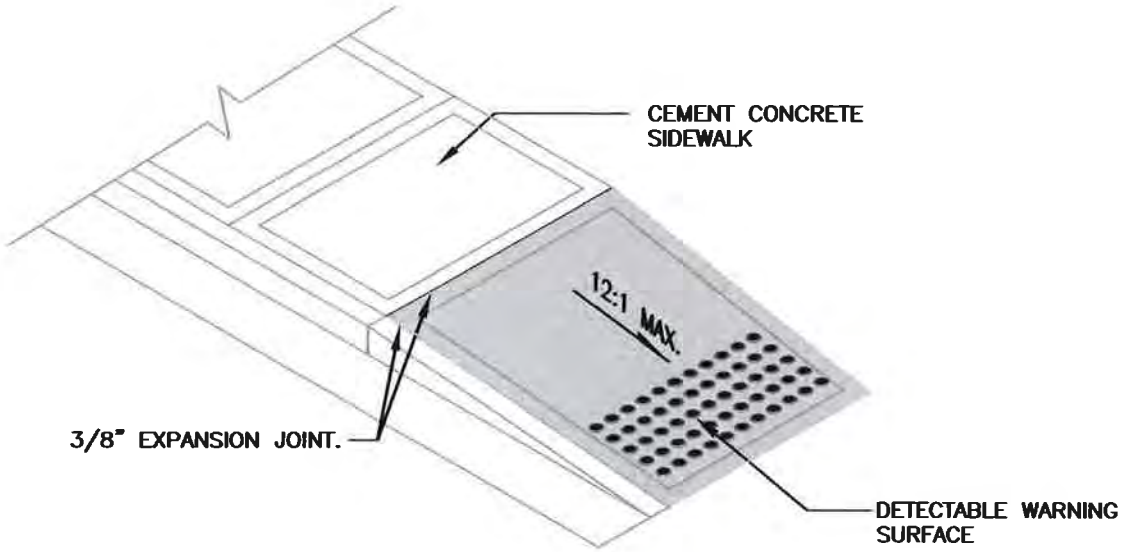


## ISOMETRIC VIEW

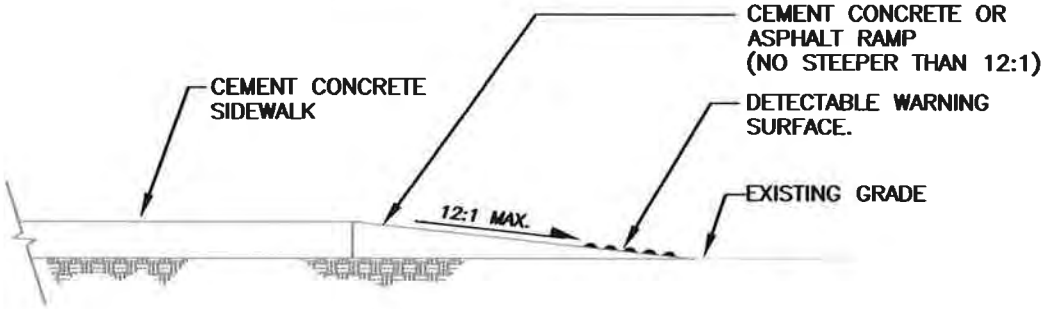


## ELEVATION VIEW

**NOTE:**

CURB RAMPS SHALL MEET WSDOT DESIGN CRITERIA CURRENT AT THE TIME OF CONSTRUCTION.

CITY OF GRANITE FALLS

SIDEWALK RAMP TO SHOULDER

APPROVED:

DATE: 10/18/2016

DWG. NO. T-24D SWALK RAMP

L:\GrFalls\15484 PW Stds\Road Dt\T-24d swalk ramp.dwg, 10/18/2016 4:45 PM, RUSSELL HORITA

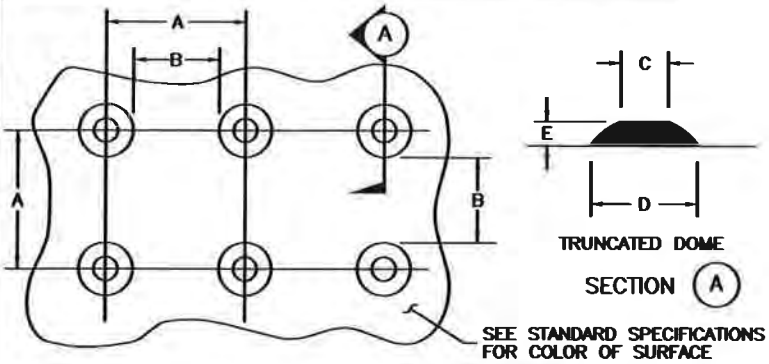


TRUNCATED DOME SPACING
SEE NOTE 3

| | MIN. | MAX. |
|---|---|---|
| A | 1.60" | 2.40" |
| B | 0.65" | — |
| C | 0.45" | 0.90" |
| D | 0.9" | 1.40" |
| E | 0.2" | 0.2" |

TRUNCATED DOME DETAILS

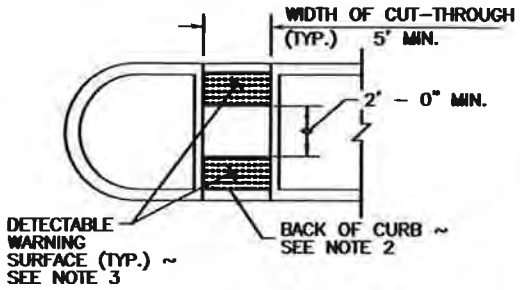


MEDIAN CUT-THROUGH

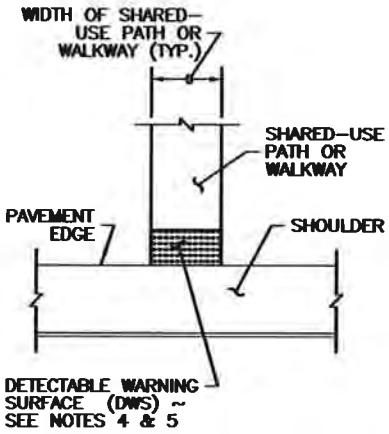


SHARED-USE PATH CONNECTION

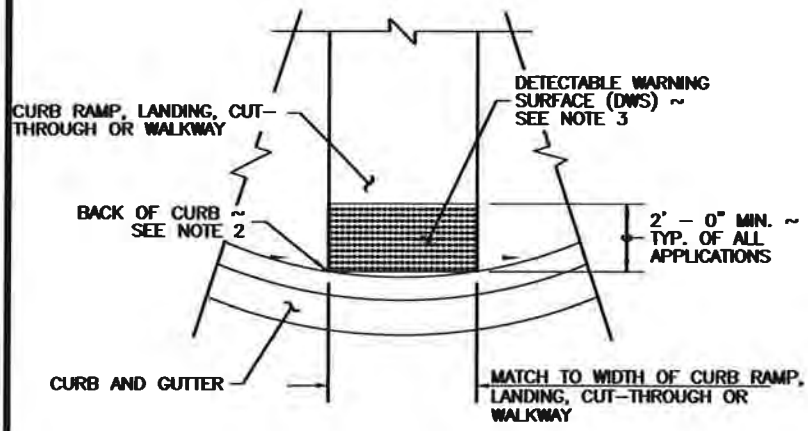


DETECTABLE WARNING SURFACE DETAIL

## NOTES

1. THE DETECTABLE WARNING SURFACE (DWS) SHALL EXTEND THE FULL WIDTH OF THE CURB RAMP (EXCLUSIVE OF FLARES) OR THE LANDING.
2. THE DETECTABLE WARNING SURFACE SHALL BE PLACED AT THE BACK OF CURB, AND NEED NOT FOLLOW THE RADIUS.
3. THE ROWS OF TRUNCATED DOMES SHALL BE ALIGNED TO BE PERPENDICULAR TO THE GRADE BREAK AT THE BACK OF CURB.
4. THE ROWS OF TRUNCATED DOMES SHALL BE ALIGNED TO BE PARALLEL TO THE DIRECTION OF TRAVEL.
5. IF CURB AND GUTTER ARE NOT PRESENT, SUCH AS A SHARED-USE PATH CONNECTION, THE DETECTABLE WARNING SURFACE SHALL BE PLACED AT THE PAVEMENT EDGE.
6. WHEN THE GRADE BREAK BETWEEN THE CURB RAMP AND THE LANDING IS LESS THAN OR EQUAL TO 5 FT. FROM THE BACK OF CURB AT ALL POINTS, PLACE THE DETECTABLE WARNING SURFACE ON THE BOTTOM OF THE CURB RAMP.

CITY OF GRANITE FALLS

DETECTABLE WARNING SURFACE

APPROVED: Warren W Parker

DATE: 10/18/2016

DWG. NO.
T-24F
DETECT2

L:\GrFalls\15484 PW Stds\Road Dt\T-24f detect2.dwg, 10/18/2016 4:45 PM, RUSSELL HORITA

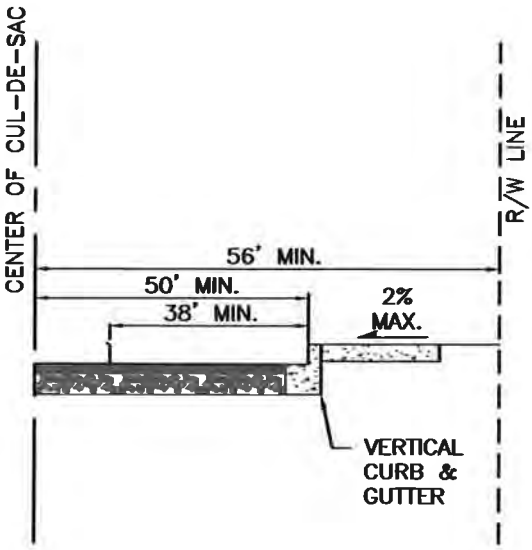


NOTES:

1. SEE SEC. 5.9 OF THE PUBLIC WORKS STANDARDS.
2. R=50'
3. R=56'

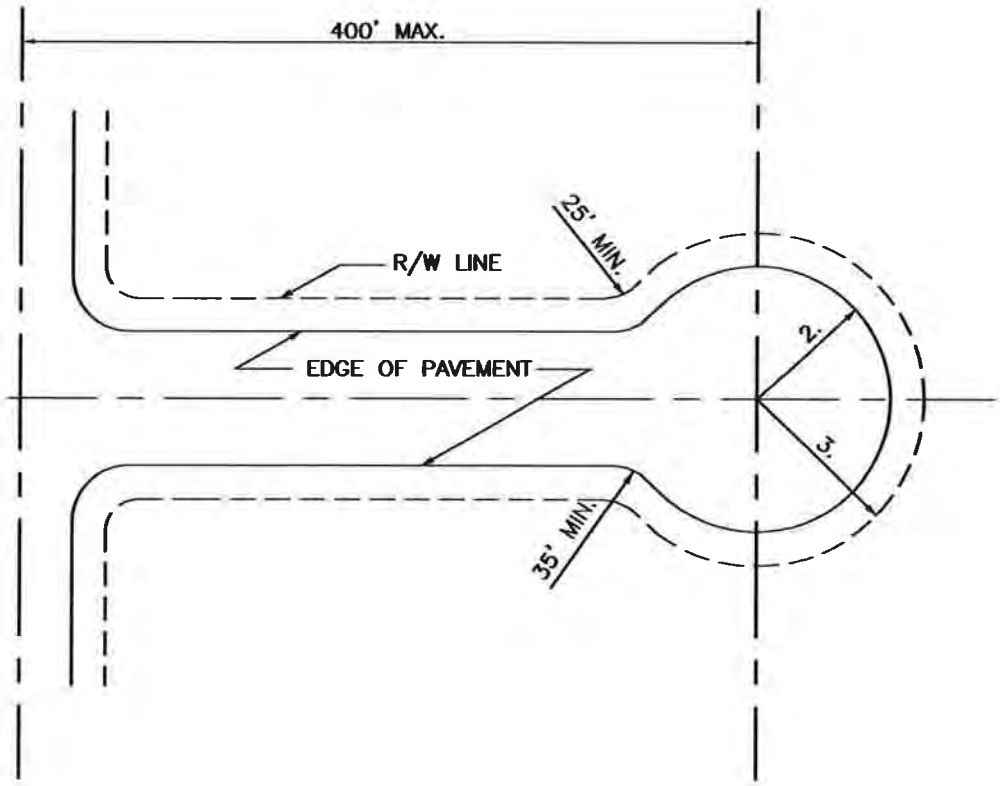


CITY OF GRANITE FALLS

CUL-DE-SAC

APPROVED: Warren Ahrens

DATE: 10/18/2016

DWG. NO. T-5 CULDESAC

L:\GrFalls\15484 PW Stds\Road Dtl\T-5 culdesac.dwg, 10/18/2016 4:45 PM, RUSSELL HORITA

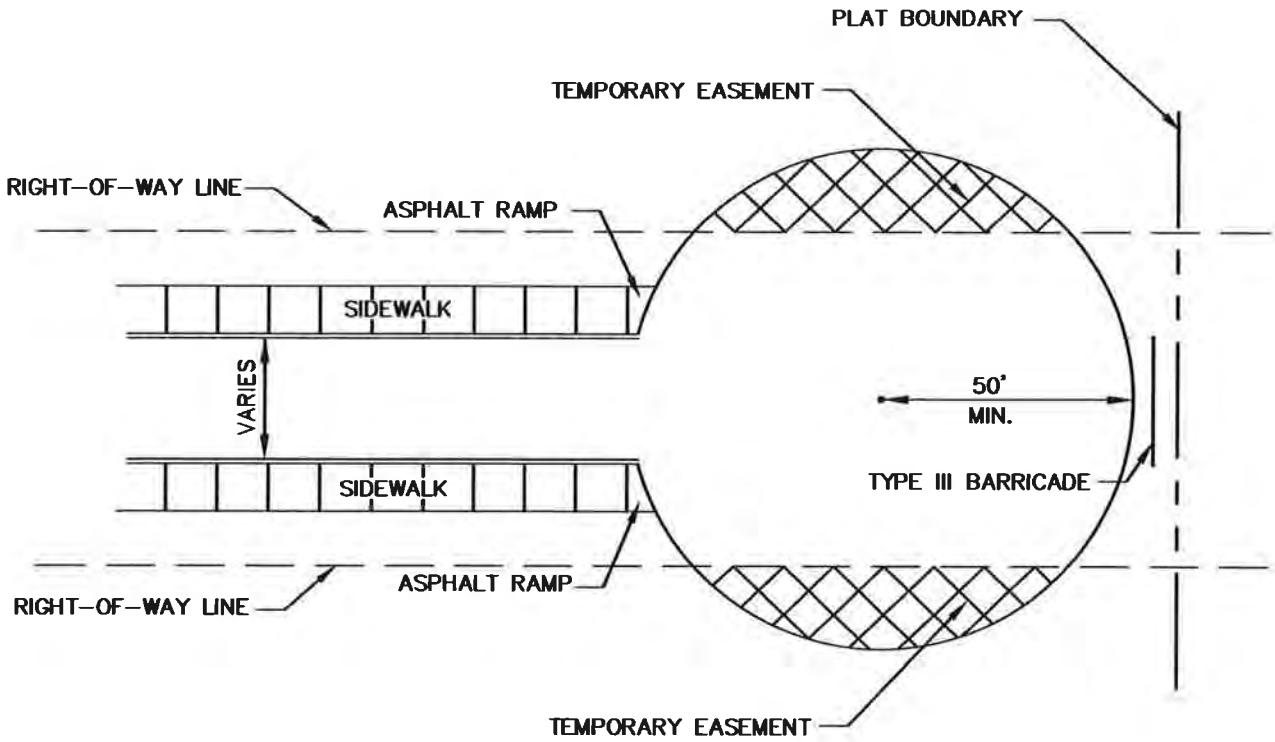


NOTES:

1. SEE SEC. 5.10 OF THE PUBLIC WORKS STANDARDS.
2. BARRICADE REQUIRED AT END OF BULB.

CITY OF GRANITE FALLS

TEMPORARY CUL-DE-SAC

APPROVED: Warren H Peters

DATE: 10/18/2016

DWG. NO. T-6 TEMP CULDESAC

L:\GrFalls\15484 PW Stds\Road Dtl\T-6 temp culdesac.dwg, 10/18/2016 4:45 PM, RUSSELL HORITA

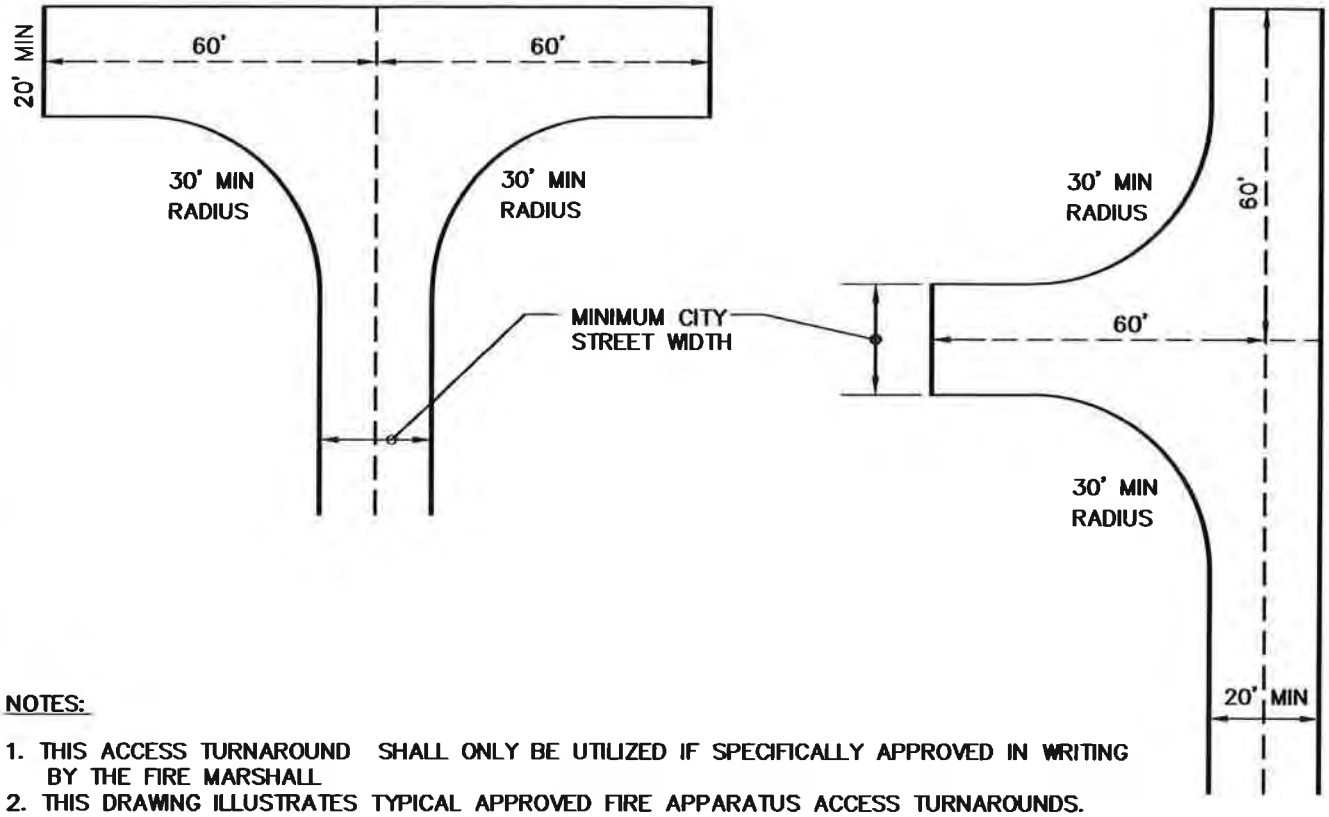


NOTES:

1. THIS ACCESS TURNAROUND SHALL ONLY BE UTILIZED IF SPECIFICALLY APPROVED IN WRITING BY THE FIRE MARSHALL
2. THIS DRAWING ILLUSTRATES TYPICAL APPROVED FIRE APPARATUS ACCESS TURNAROUNDS. THE SIDE ACCESS DESIGN MAY BE RIGHT OR LEFT (LEFT DIRECTION SHOWN).
3. ALL DIMENSIONS ARE MINIMUM REQUIREMENTS.
4. OTHER SHAPED ACCESS TURNAROUNDS ARE AN ACCEPTABLE ALTERNATIVE TO THOSE SHOWN, PROVIDED THE DESIGN MEETS THE MINIMUM DIMENSION REQUIREMENTS SHOWN ABOVE.
5. THE ALTERNATIVE FIRE ACCESS TURNAROUND SHALL BE MARKED AS A FIRE LANE IN ACCORDANCE WITH K.C.C. 17.04.070.
6. MINIMUM ROAD WIDTH SHOWN DOES NOT INCLUDE ANY SHOULDER DIMENSIONS OR CURB DIMENSIONS IF REQUIRED.

FIRE ACCESS CONTROL:

ALL LEGS OF THE TURNAROUND SHALL BE MARKED AS A FIRE LANE.

THE TURNAROUND SHALL MEET THE SAME GRADE AND SURFACING STANDARDS APPLIED TO CITY STREETS.

THE MAXIMUM CROSS SLOPE ON THE TURNAROUND SHALL NOT EXCEED SIX PERCENT.

CITY OF GRANITE FALLS

ALTERNATIVE FIRE APPARATUS ACCESS TURNAROUNDS

APPROVED: Warren W Parks

DATE: 10/18/2016

DWG. NO. AAT

L:\GrFalls\15484 PW Stds\Road Dtl\AAT.dwg, 10/18/2016 4:46 PM, RUSSELL HORITA

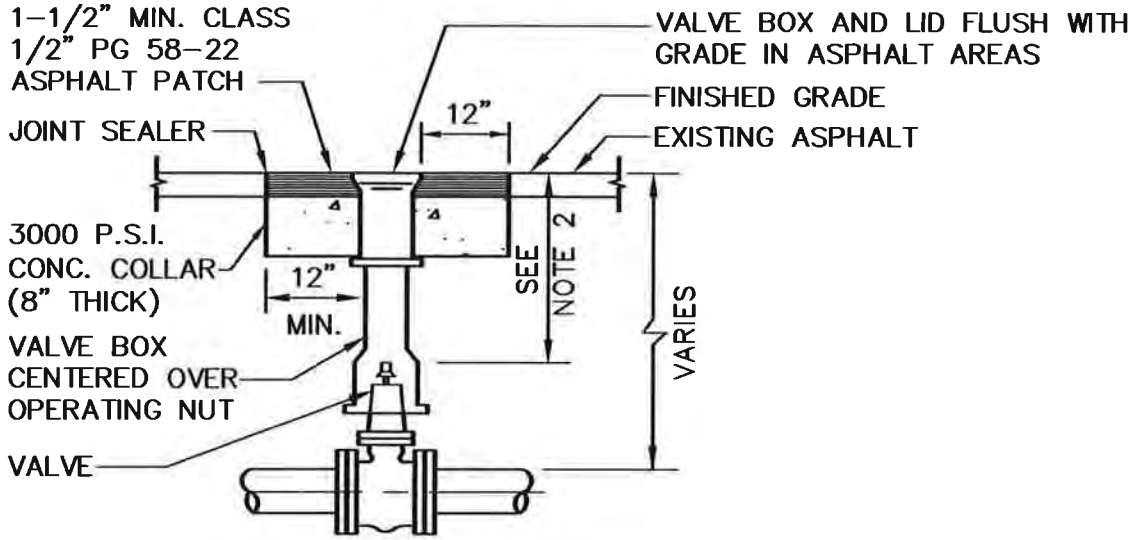


VALVE BOX IN ASPHALT AREA

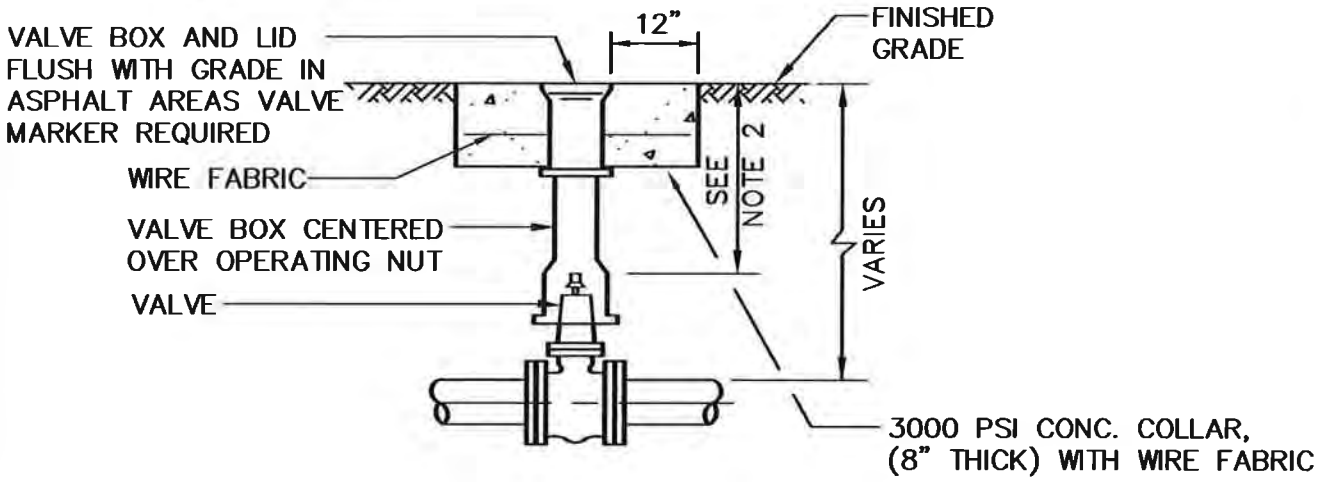


VALVE BOX IN UNIMPROVED AREA

NOTES:

1. EACH VALVE SHALL BE PROVIDED WITH AND ADJUSTABLE CAST IRON VALVE BOX OF 5 INCHES (5") INSIDE DIAMETER. VALVE BOXES SHALL HAVE A TOP SECTION WITH AN EIGHTEEN INCH (18") MIN. LENGTH. THE VALVE BOX SHALL BE RICH No. 940 OR APPROVED EQUAL. VALVE BOX EARS SHALL BE PLACED IN LINE WITH PIPE IT SERVES.

2. 15" MINIMUM, 36" MAXIMUM FOR OPERATOR NUT. EXTENSION MAY BE REQUIRED.

CITY OF GRANITE FALLS

VALVE BOX

APPROVED: Warren A. Rykken

DATE: 10/18/2016

DWG. NO.
VALV-BOX

L:\GrFalls\15484 PW Stds\Road Dtl\VALV-BOX.dwg, 10/18/2016 4:46 PM, RUSSELL HORITA

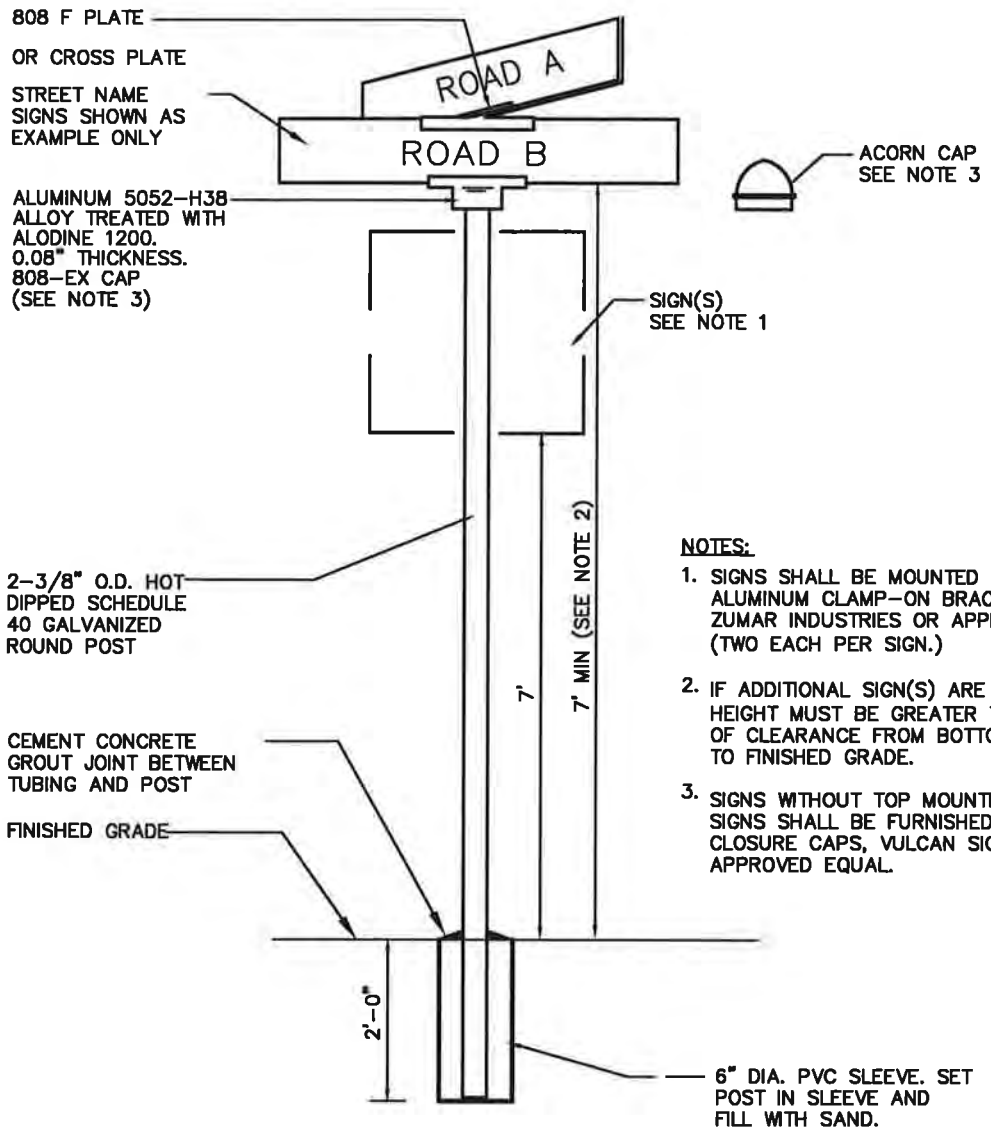


NOTES:

1. SIGNS SHALL BE MOUNTED WITH EXTRUDED ALUMINUM CLAMP-ON BRACKETS SZ 238 BY ZUMAR INDUSTRIES OR APPROVED EQUAL. (TWO EACH PER SIGN.)
2. IF ADDITIONAL SIGN(S) ARE MOUNTED ON POST, HEIGHT MUST BE GREATER TO ALLOW FOR 7' OF CLEARANCE FROM BOTTOM OF LOWEST SIGN TO FINISHED GRADE.
3. SIGNS WITHOUT TOP MOUNTED STREET NAME SIGNS SHALL BE FURNISHED WITH ACORN TOP CLOSURE CAPS, VULCAN SIGN VSCPC250 OR APPROVED EQUAL.

## SIGN INSTALLATION DETAIL

NTS

CITY OF GRANITE FALLS

SIGN INSTALLATION DETAIL

APPROVED: Warren W Perkins

DATE: 8/31/17

DWG. NO. ROAD SIGNS

I:\GrFalls\15484 PW Stds\Road Dtl\Road Signs.dwg, 9/1/2017 9:46 AM, BRUCE SHELDON

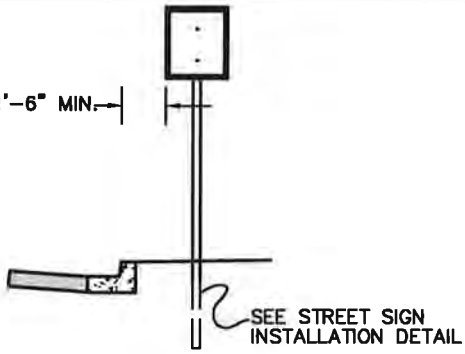


**CASE 1**
NO SIDEWALK

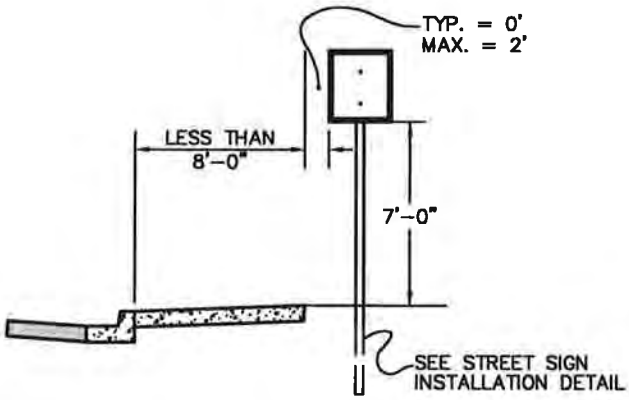


**CASE 2**
BEHIND CEMENT CONCRETE SIDEWALK LESS THAN 8'-0" WIDE

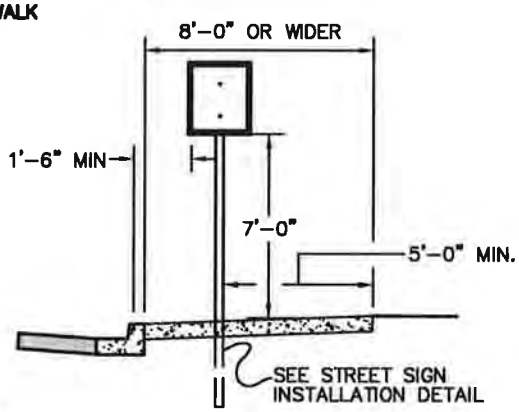


**CASE 3**
WITHIN 8'-0" OR WIDER CEMENT CONCRETE SIDEWALK

## STREET SIGN LOCATION DETAIL

NTS

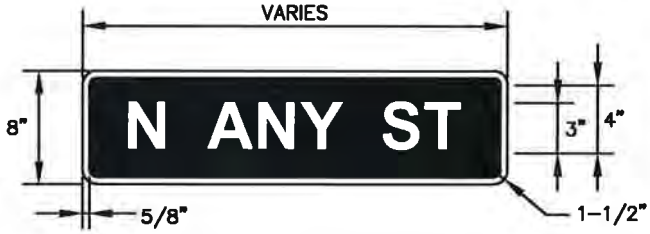


NOTES:

1. COLOR SHALL BE WHITE (REFL) ON GREEN (REFL).
2. ALL STREET NAME SIGNS SHALL BE DOUBLE SIDED
3. STREET NAMES ARE SHOWN FOR EXAMPLE ONLY. CONTRACTOR SHALL VERIFY EXACT TEXT WITH OWNER PRIOR TO ORDERING SIGNS.

## TYPICAL STREET NAME SIGN DETAIL

| | |
|---|---|
| CITY OF GRANITE FALLS<br>STREET SIGN LOCATION DETAIL AND STREET NAME SIGN DETAIL | |
| APPROVED: Karen W Perkins<br>DATE: 8/31/17 | DWG. NO.<br>ROAD SIGNS |

I:\GrFalls\15484 PW Stds\Road Dtl\Road Signs.dwg, 9/1/2017 10:43 AM, BRUCE SHELDON

# STORM DETAILS

FRAME AND GRATE

6" RISER SECTION

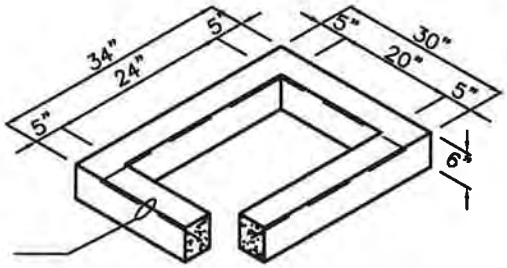


1 #3 BAR HOOP

12" RISER SECTION

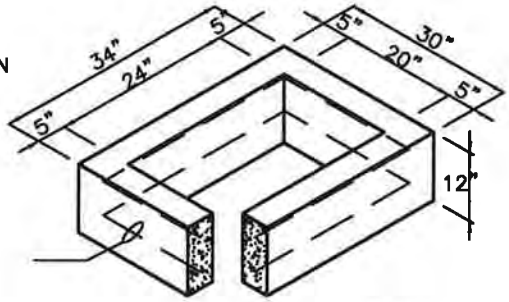


2 #3 BAR HOOPS

PRECAST BASE SECTION
(MEASUREMENT AT THE TOP OF THE BASE)

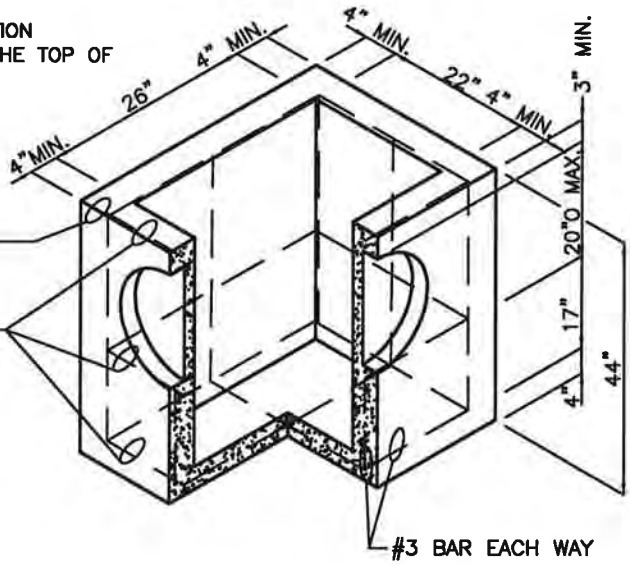


#3 BAR EACH CORNER

#3 BAR EACH SIDE

#3 BAR EACH WAY

NOTES:

1. CATCH BASINS SHALL BE CONSTRUCTED IN ACCORDANCE WITH SECTION 7-05 WSDOT/APWA STANDARD SPECIFICATIONS, UNLESS OTHERWISE SHOWN ON PLANS.
2. AS AN ACCEPTABLE ALTERNATIVE TO REBAR, WELDED WIRE FABRIC HAVING A MIN. AREA OF 0.12 SQUARE INCHES PER FOOT MAY BE USED. WELDED WIRE FABRIC SHALL COMPLY TO ASTM A497 (AASHTO M 221). WIRE FABRIC SHALL NOT BE PLACED IN KNOCKOUTS.
3. ALL REINFORCED CAST-IN-PLACE CONCRETE SHALL BE CLASS 4000.
4. PRECAST BASES SHALL BE FURNISHED WITH CUTOUTS OR KNOCKOUTS. KNOCKOUTS SHALL HAVE A WALL THICKNESS OF 2" MIN. ALL PIPE SHALL BE INSTALLED IN FACTORY PROVIDED KNOCKOUTS. UNUSED KOCKOUTS NEED NOT BE GROUTED IF WALL IS LEFT INTACT.
5. KNOCKOUT OR CUTOUT HOLE SIZE IS EQUAL TO PIPE OUTER DIA. PLUS CATCH BASIN WALL THICKNESS.
6. ROUND KNOCKOUTS MAY BE ON ALL 4 SIDES, WITH MAX. DIA. OF 20". KNOCKOUTS MAY BE EITHER ROUND OR "D" SHAPE.
7. THE MAX. DEPTH FROM THE FINISHED GRADE TO THE PIPE INVERT IS 5'-0".
8. THE TAPER ON THE SIDES OF THEPRECAST BASE SECTION AND RISER SECTION SHALL NOT EXCEED 1/2"/FT.
9. CATCH BASIN FRAME AND GRATE SHALL BE IN ACCORDANCE WITH WSDOT STANDARD SPECIFICATIONS AND MEET THE STRENGTH REQUIREMENTS OF FEDERAL SPECIFICATION RR-F-62ID. MATING SURFACES SHALL BE FINISHED TO ASSURE NON-ROCKING FIT WITH ANY COVER POSITION.
10. FRAME AND GRATE MAY BE INSTALLED WITH FLANGE DOWN OR CAST INTO RISER.
11. FOR CATCH BASINS IN PARKING LOTS REFER TO WSDOT/APWA STANDARD DWG. B-5.60-02.

# CITY OF GRANITE FALLS

CATCH BASIN – TYPE 1

APPROVED: Warren W Perkins

DATE: 8/31/17

DWG. NO. SW-4

:\GrFalls\15484 PW Stds\Storm Dtl\SW-4.dwg, 9/1/2017 9:45 AM, BRUCE SHELDON

FRAME AND GRATE

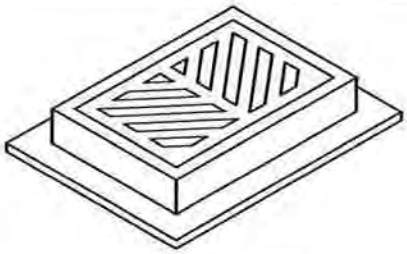

RISER SECTION

1 #3 BAR HOOP FOR 6"
2 #3 BAR HOOP FOR 12"

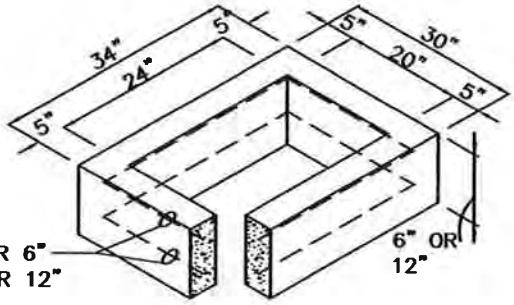


6" REDUCING SECTION

2 #3 BAR HOOP

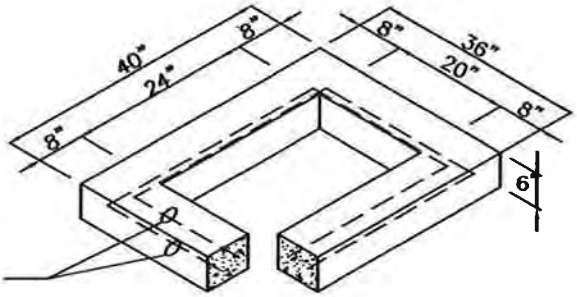


PRECAST BASE SECTION (MEASUREMENT AT THE TOP OF THE BASE)

#3 BAR EACH CORNER

#3 BAR EACH SIDE

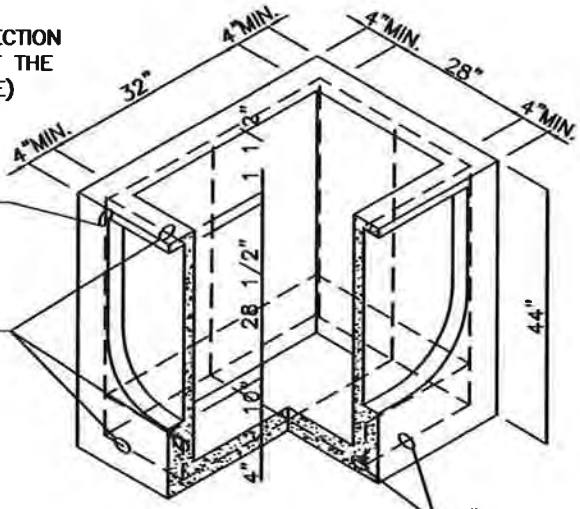


#3 BAR EACH WAY

NOTES:

1. CATCH BASINS SHALL BE CONSTRUCTED IN ACCORDANCE WITH ASTM C478 (AASHTO M 199) & C890 UNLESS OTHERWISE SHOWN ON PLANS OR NOTED IN THE WSDOT/APWA STANDARD SPECIFICATIONS.
2. AS AN ACCEPTABLE ALTERNATIVE TO REBAR, WELDED WIRE FABRIC HAVING A MIN. AREA OF 0.12 SQUARE INCHES PER FOOT MAY BE USED. WELDED WIRE FABRIC SHALL COMPLY TO ASTM A497 (AASHTO M 221). WIRE FABRIC SHALL NOT BE PLACED IN KNOCKOUTS.
3. ALL REINFORCED CAST-IN-PLACE CONCRETE SHALL BE CLASS 4000.
4. PRECAST BASES SHALL BE FURNISHED WITH CUTOUTS OR KNOCKOUTS. KNOCKOUTS SHALL HAVE A WALL THICKNESS OF 2" MIN. ALL PIPE SHALL BE INSTALLED IN FACTORY PROVIDED KNOCKOUTS. UNUSED KNOCKOUTS NEED NOT BE GROUTED IF WALL IS LEFT INTACT.
5. KNOCKOUT OR CUTOUT HOLE SIZE IS EQUAL TO PIPE OUTER DIAM. PLUS CATCH BASIN WALL THICKNESS.
6. KNOCKOUTS MAY BE ON ALL 4 SIDES WITH MAX. DIAM. OF 28". KNOCKOUTS MAY BE EITHER ROUND OR "D" SHAPE.
7. THE TAPER ON THE SIDES OF THE PRECAST BASE SECTION AND RISER SECTION SHALL NOT EXCEED 1/2"/FT.
8. CATCH BASIN FRAME AND GRATE SHALL BE IN ACCORDANCE WITH STANDARD SPECIFICATIONS AND MEET THE STRENGTH REQUIREMENTS OF FEDERAL SPECIFICATION RR-F-621D. MATING SURFACES SHALL BE FINISHED TO ASSURE NON-ROCKING FIT WITH ANY COVER POSITION.
9. FRAME AND GRATE MAY BE INSTALLED WITH FLANGE DOWN OR CAST INTO RISER.
10. MAX. DEPTH FROM FINISHED GRADE TO PIPE INVERT SHALL BE 5'-0".
11. EDGE OF REDUCING SECTION OR BRICK SHALL NOT BE MORE THAN 2" FROM VERTICAL EDGE OF CATCH BASIN WALL.

CITY OF GRANITE FALLS

CATCH BASIN – TYPE 1L

APPROVED: Warren W Perkins

DATE: 10/18/2016

DWG. NO. SW-5

L:\GrFalls\15484 PW Stds\Storm Dtl\SW-5.dwg, 10/18/2016 5:13 PM, RUSSELL HORITA

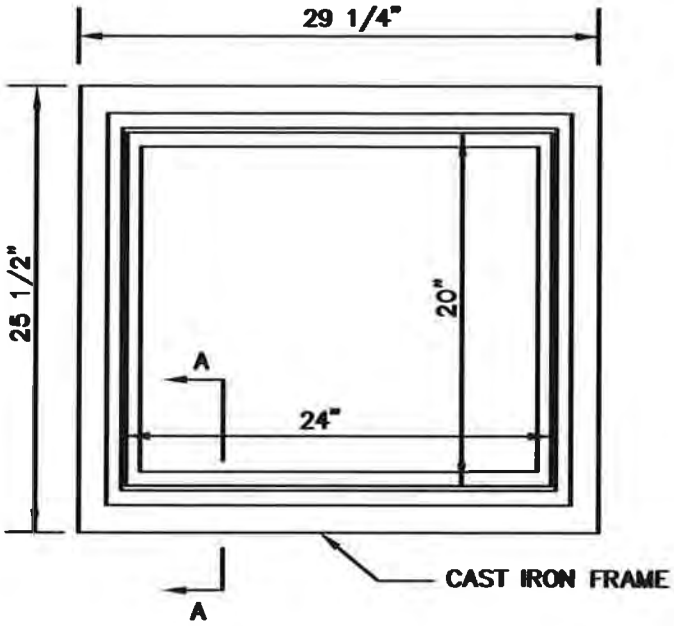


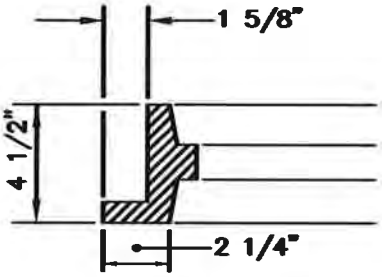


SECTION A–A

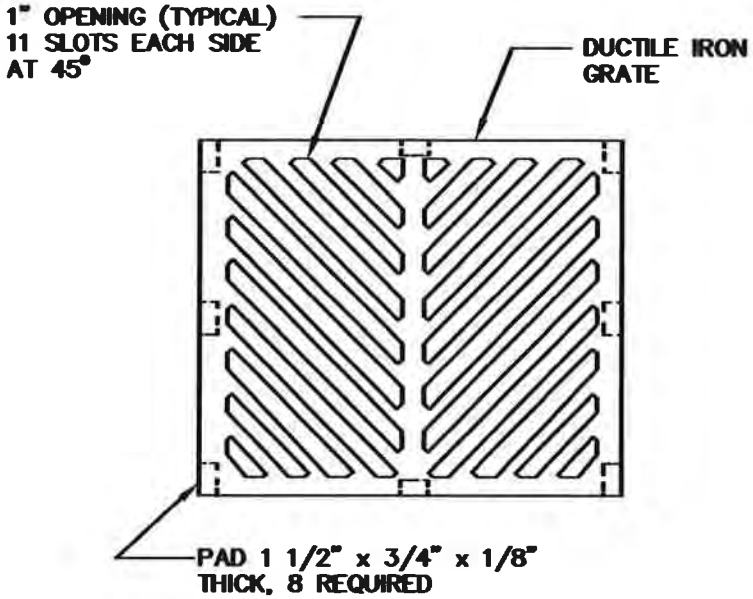


**NOTES:**

1. MATERIAL SHALL CONFORM TO THE STANDARD SPECIFICATIONS PREPARED BY THE WASHINGTON STATE DEPARTMENT OF TRANSPORTATION AND AMERICAN PUBLIC WORKS ASSOCIATION, WASHINGTON CHAPTER

2. WHEN ROAD PROFILE, EXCEED 6% "VANED" GRATES SHALL BE INSTALLED IN LIEU OF THE STANDARD FRAME AND GRATE, AT THE DISCRETION OF THE CITY

CITY OF GRANITE FALLS

**CATCH BASIN FRAME AND GRATE**

APPROVED: Warren W Pickles

DATE: 10/18/2016

DWG. NO. STOM-3

L:\GrFalls\15484 PW Stds\Storm Dtl\STOM-3.dwg, 10/18/2016 5:12 PM, RUSSELL HORITA

**NOTES:**

1. CATCH BASINS SHALL BE CONSTRUCTED IN ACCORDANCE WITH ASTM C478 (AASHTO M199) AND ASTM C890 UNLESS OTHERWISE SHOWN ON PLANS OR NOTED IN THE STANDARD SPECIFICATIONS.
2. HANDHOLDS IN ADJUSTMENT SECTION SHALL HAVE 3" MIN. CLEARANCE. STEPS IN CATCH BASIN SHALL HAVE 6" MIN. CLEARANCE. HANDHOLDS SHALL BE PLACED IN ALTERNATING GRADE RINGS OR LEVELING BRICK COURSE WITH A MIN. OF ONE HANDHOLD BETWEEN THE LAST STEP AND TOP OT THE FINISHED GRADE.
3. ALL REINFORCED CAST-IN-PLACE CONCRETE SHALL BE CLASS 4000. ALL PRECAST CONCRETE SHALL BE CLASS 4000.
4. PRECAST BASES SHALL BE FURNISHED WITH CUTOUTS OR KNOCKOUTS. KNOCKOUTS SHALL HAVE WALL THICKNESS OF 2" MIN. UNUSED KNOCKOUTS NEED NOT BE GROUTED IF WALL IS LEFT INTACT. PIPES SHALL BE INSTALLED ONLY IN FACTORY KNOCKOUTS UNLESS OTHERWISE APPROVED BY THE ENGINEER.
5. KNOCKOUT OR CUTOUT HOLE SIZE SHALL EQUAL PIPE OUTER DIAM. PLUS CATCH BASIN WALL THICKNESS. MAX. HOLE SIZE SHALL BE 36" FOR 48" CATCH BASIN, 42" FOR 54" C.B., 48" FOR 60" C.B., 60" FOR 72" C.B., 84" FOR 96" C.B. MIN. DISTANCE BETWEEN HOLES SHALL BE 8" FOR 48", 54", AND 60" C.B.; 12" FOR 72" AND 96" C.B.
6. CATCH BASIN FRAMES AND GRATES OR COVERS SHALL BE IN ACCORDANCE WITH SEC. 7.05 OF THE STANDARD SPECIFICATIONS. MATING SURFACES SHALL BE FINISHED TO ASSURE NON-ROCKING FIT WITH ANY COVER POSITION.
7. ALL BASE REINFORCING STEEL SHALL HAVE A MIN. YIELD STRENGTH OF 60,000 PSI AND BE PLACED IN THE UPPER HALF OF THE BASE WITH 1" MIN. CLEARANCE.
8. MIN. SOIL BEARING VALUE SHALL EQUAL 3,300 POUNDS PER SQUARE FOOT.
9. FOR DETAILS SHOWING LADDER, STEPS, HANDRAILS AND TOP SLABS, SEE OTHER STANDARD DETAILS.
10. SEE THE STANDARD SPECIFICATIONS SEC. 7-05.3 FOR JOINT REQUIREMENTS.
11. MANHOLE CONNECTION AS FOLLOWS:
    - FOR HDPE, D.I., PVC: USE KOR-N-SEAL OR SEALED COLLAR
    - FOR POLYETHYLENE (ADS), GROUT IN PLACE

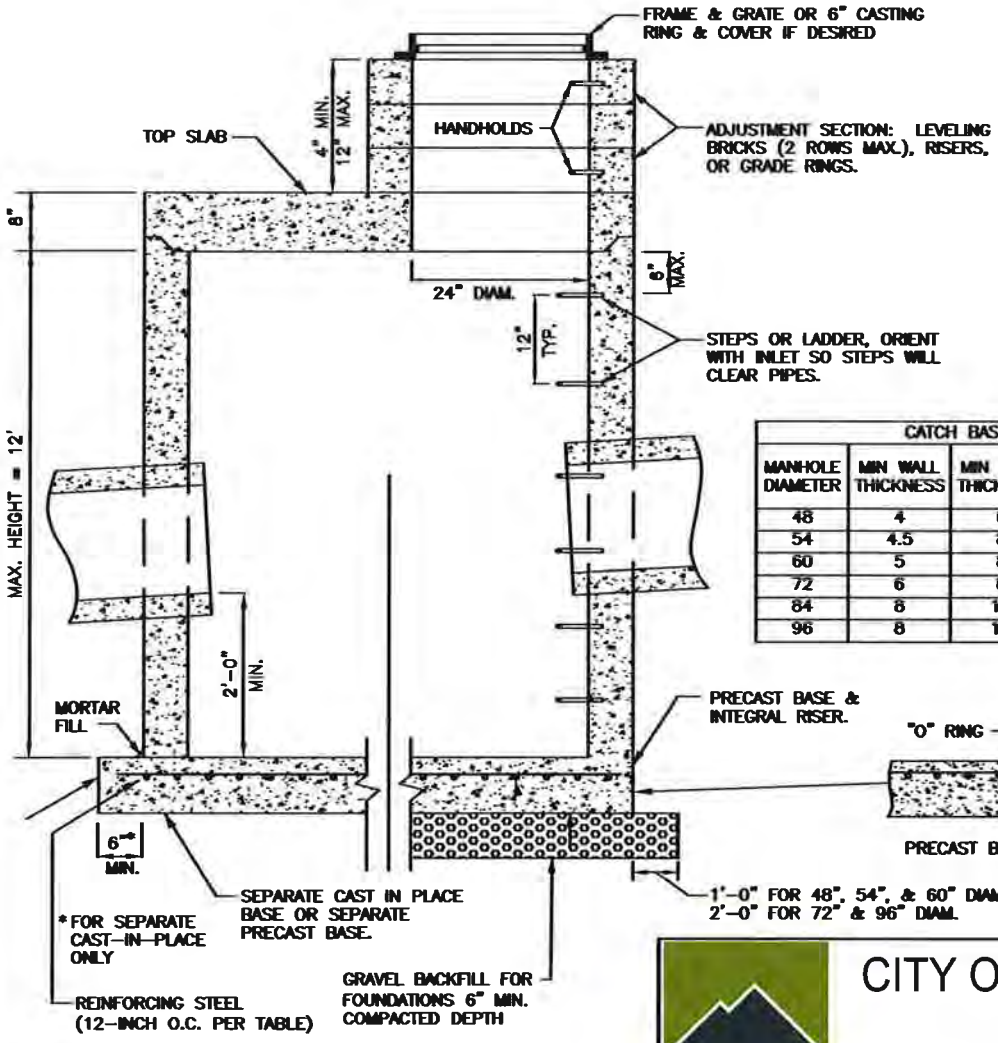


| CATCH BASIN DIMENSIONS (INCHES) | | | | | |
|---|---|---|---|---|---|
| MANHOLE DIAMETER | MIN WALL THICKNESS | MIN BASE THICKNESS | REINFORCING STEEL SIZE | MAX KNOCKOUT SIZE | MIN DIST BETWEEN KNOCKOUTS |
| 48 | 4 | 6 | #3 | 36 | 8 |
| 54 | 4.5 | 8 | #3 | 42 | 8 |
| 60 | 5 | 8 | #3 | 48 | 8 |
| 72 | 6 | 8 | #4 | 60 | 12 |
| 84 | 8 | 12 | #4 | 72 | 12 |
| 96 | 8 | 12 | #4 | 84 | 12 |

# CITY OF GRANITE FALLS

## CATCH BASIN TYPE II

APPROVED: Warren A. Perkins

DATE: 10/18/2016

DWG. NO. CB-TP2

L:\GrFalls\15484 PW Stds\Storm Dtl\CB-TP2.dwg, 10/18/2016 5:11 PM, RUSSELL HORITA

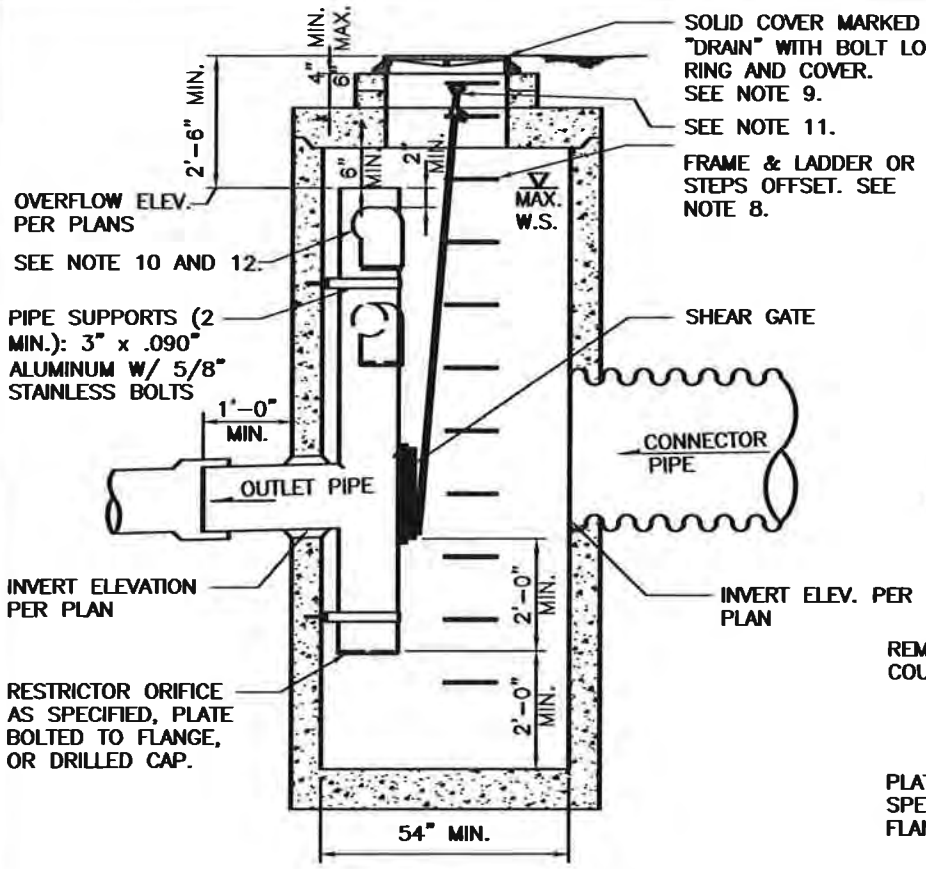


## CATCH BASIN TYPE 2

DIAM. AS REQUIRED

NOTE:
ATTACH SCREEN TO CMP CROSS W/ 6 1" METAL SCREWS–2 PER STRAP, OR USE STAINLESS STEEL PIPE CLAMP.

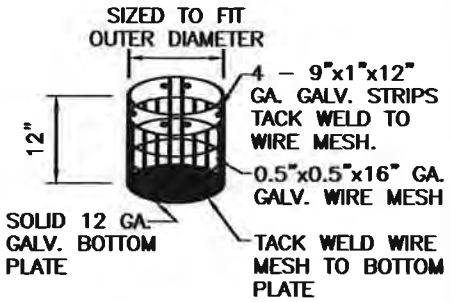


## FLOW CONTROL SCREEN

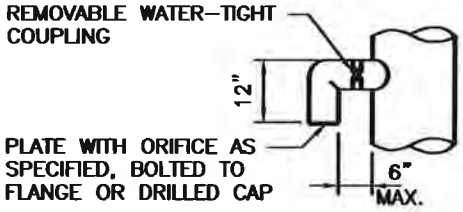


## ELBOW DETAIL

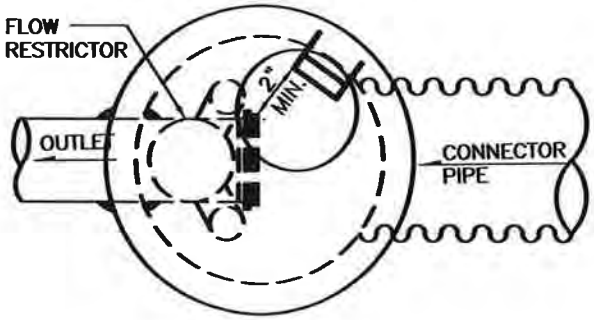


## PLAN

NOTES:

1. PIPE SIZES, INVERT ELEVATIONS, ORIFICE SIZES, OVERFLOW ELEVATIONS AND SLOPES; PER PLANS.
2. OUTLET CAPACITY: NOT LESS THAN COMBINED INLETS.
3. EXCEPT AS SHOWN OR NOTED, UNITS SHALL BE CONSTRUCTED IN ACCORDANCE WITH THE REQUIREMENTS FOR CATCH BASIN TYPE 2, 54" MIN. DIAM.
4. PIPE SUPPORTS AND RESTRICTOR SHALL BE OF SAME MATERIAL, AND BE ANCHORED AT 3' MAX. SPACING BY 5/8" DIAM. STAINLESS STEEL EXPANSION BOLTS OR EMBEDDED 2" IN WALL.
5. THE RESTRICTOR SHALL BE FABRICTED FROM .060" ALUMINUM, PVC, CPE, OR HDPE PIPE. METAL PARTS SHALL BE CORROSION RESISTANT. GALVANIZED PIPE PARTS TO HAVE ASPHALT TREATMENT 1.
6. OUTLET SHALL BE CONNECTED TO CULVERT OR SEWER PIPE WITH SUITABLE COUPLER OR GROUTED INTO THE BELL OF CONCRETE PIPE.
7. THE VERTICAL RISER STEM OF THE RESTICTOR SHALL BE THE SAME DIAM. AS THE HORIZONTAL OUTLET PIPE, WITH AN 8" MIN. DIAM.
8. FRAME AND LADDER OR STEPS OFFSET SO THAT:
   A. SHEAR GATE IS VISIBLE FROM TOP.
   B. CLIMB DOWN SPACE IS CLEAR OF RISER AND SHEAR GATE.
   C. FRAME IS CLEAR OF CURB. ALL STEPS AND HANDHOLD SHALL BE MADE OF POLY PROPYLENE.
9. FOR POND APPLICATIONS SOLID COVER AND MANHOLE CONCRETE LID SHALL BE REPLACED WITH DEBRIS CAGE.
10. MULTI–ORIFICE ELBOWS MAY BE LOCATED AS SHOWN OR ALL ON ONE SIDE OF RISER TO ASSURE LADDER CLEARANCE.
11. SHEAR GATE HANDLE SHALL BE ATTACHED TO LADDER/ STEP LOCATED WITHIN 24" ACCESS SECTION.
12. IF NOTCHED WEIR IS USED IN LIEU OF ELBOW, BAFFLE SHALL NOT OBSTRUCT ACCESS TO THE STRUCTURE.

CITY OF GRANITE FALLS

FLOW RESTRICTOR
TEE TYPE

APPROVED: Warren W Beck

DATE: 10/18/2016

DWG. NO.
SW-20

L:\GrFalls\15484 PW Stds\Storm Dtl\SW-20.dwg, 10/18/2016 5:15 PM, RUSSELL HORITA

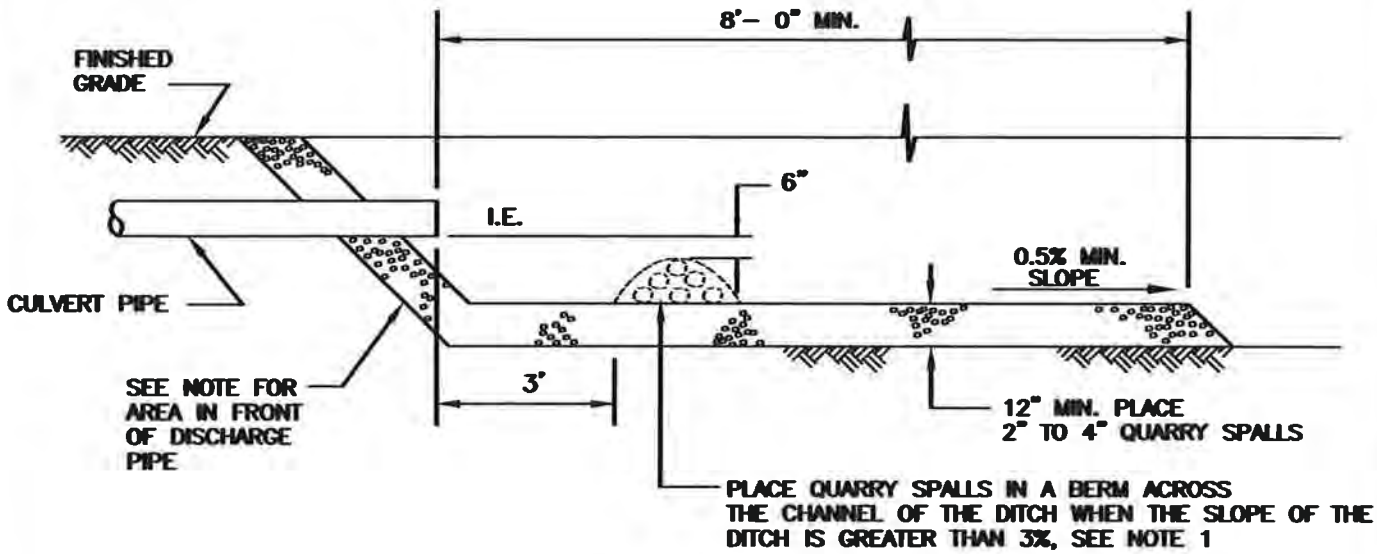


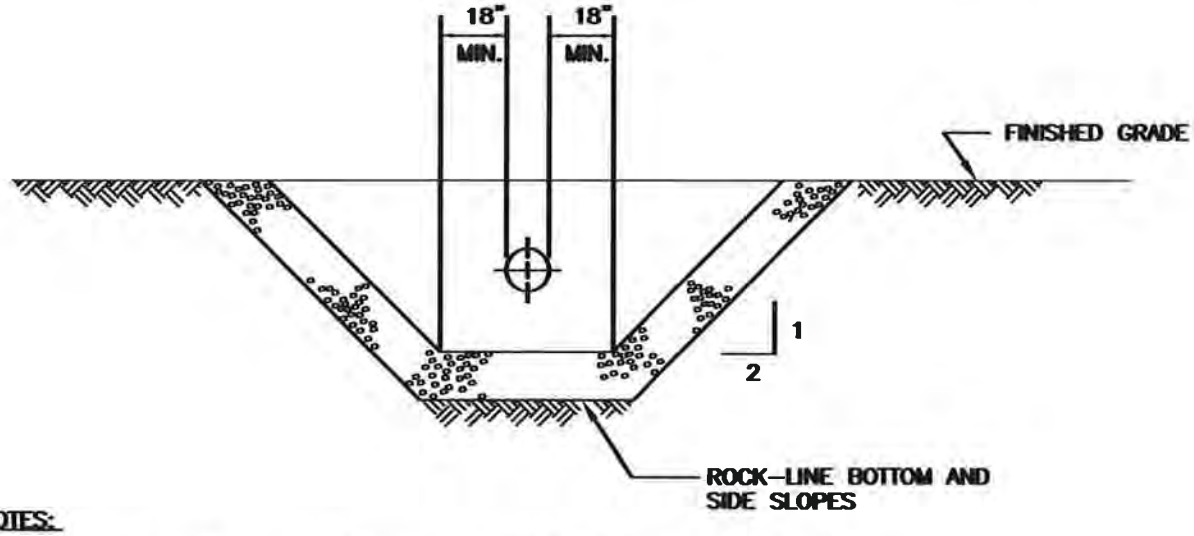


NOTES:

1. PLACE QUARRY SPALLS IN FRONT OF CULVERT DISCHARGE, ENGINEER SHALL SIZE QUARRY SPALL BERM

| | |
|---|---|
| CITY OF GRANITE FALLS<br>RIPRAP AND ENERGY DISSIPATION FOR DITCH | |
| APPROVED: [signature]<br>DATE: 10/18/2016 | DWG. NO.<br>DTCH-2 |

L:\GrFalls\15484 PW Stds\Storm Dtl\DTCH-2.dwg, 10/18/2016 5:12 PM, RUSSELL HORITA

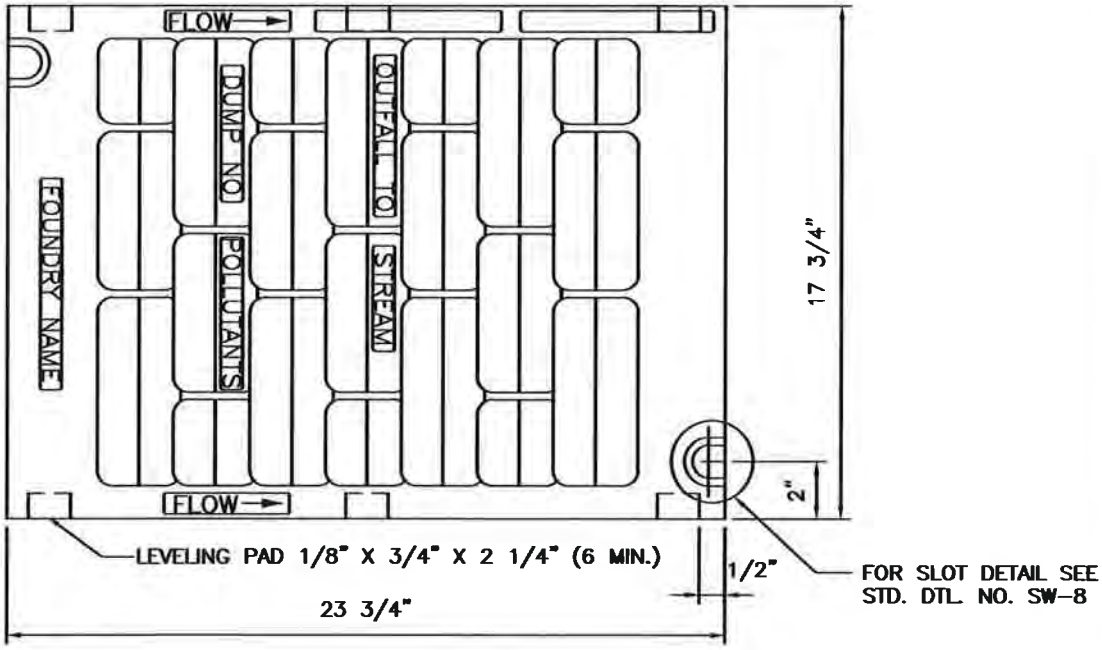


## PLAN

## ELEVATION

**NOTES:**

1. SELF–LOCK VANED GRATE MANUFACTURER SUBJECT TO APPROVAL BY ENGINEER.
2. USE WITH TWO LOCKING BOLTS 5/8"–11 NC STAINLESS TYPE 304 STEEL SOCKET HEAD (ALLEN HEAD) BOLTS, 2" LONG. NOTE SLOT DETAIL. PROVIDE WHERE REQUIRED. ALL LIDS OUTSIDE OF ROADWAY TO BE LOCKED.
3. MATERIAL IS DUCTILE IRON ASTM A536 GRADE 80–55–06.
4. "OUTFALL TO STREAM DUMP NO POLLUTANTS" IN RAISED LETTERS SHALL BE LOCATED ON GRATE AS SHOWN, OR ON BORDER AREA.
5. SHALL CONFORM TO SEC. 7.05 OF THE STANDARD SPECIFICATIONS.
6. WELDING IS NOT PERMITTED.
7. EDGES SHALL HAVE 0.125" RADIUS, 0.125" CHAMBER OR COMPLETE DEBURRING.
8. USE A BI–DIRECTIONAL VANED GRATE IN SAG VERTICAL CURVES.

| | | |
|---|---|---|
| | CITY OF GRANITE FALLS<br>VANED GRATE | |
| APPROVED: | | DWG. NO. |
| DATE: 10/18/2016 | | SW-9 |

L:\GrFalls\15484 PW Stds\Storm Dtl\SW-9.dwg, 10/18/2016 5:14 PM, RUSSELL HORITA

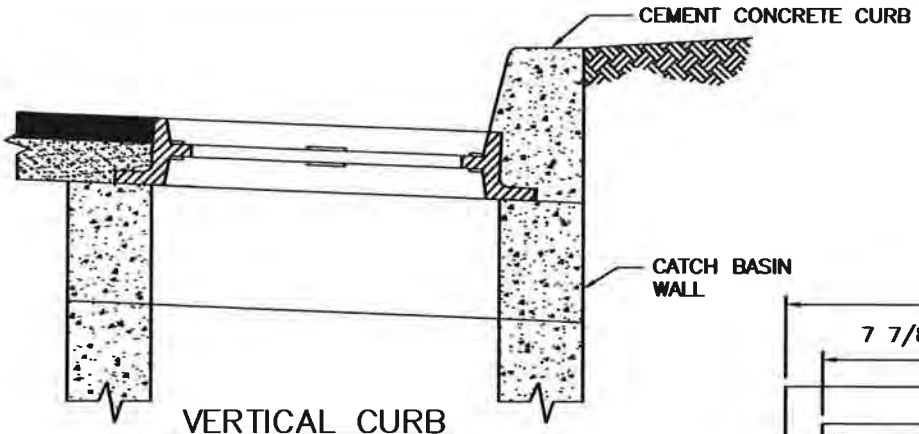


VERTICAL CURB

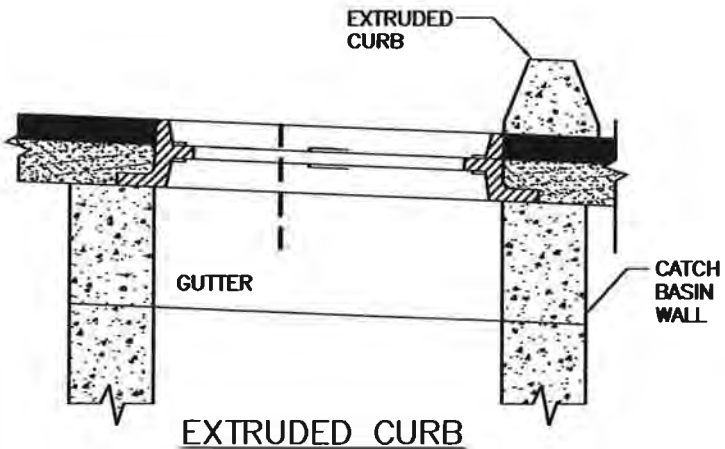


EXTRUDED CURB

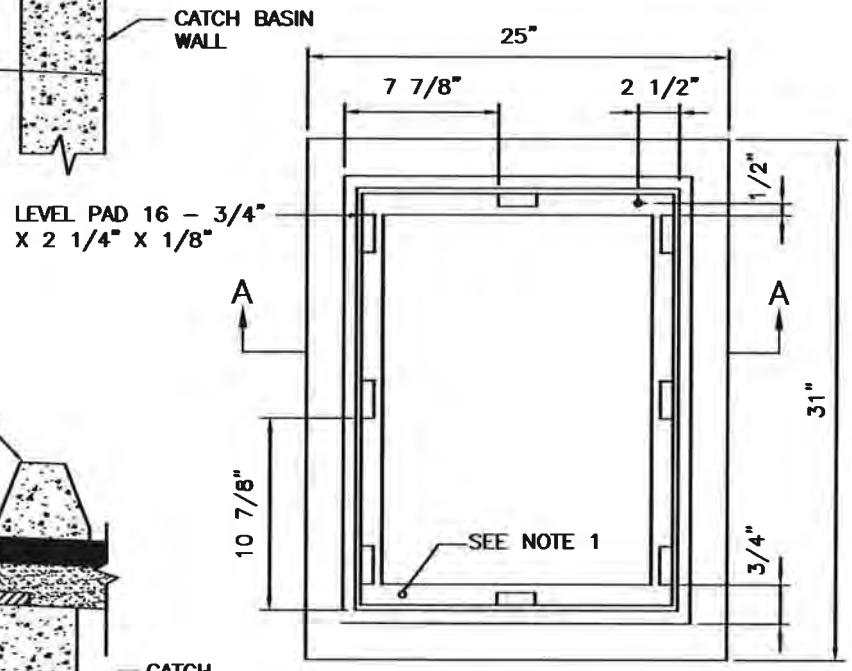


PLAN

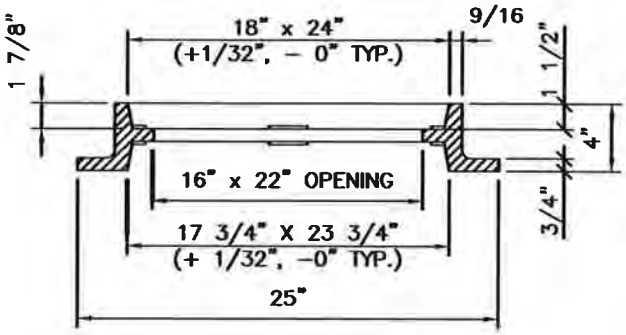


SECTION A–A

**NOTES:**

1. DRILL AND TAP FOR, AND PROVIDE, TWO LOCKING BOLTS 5/8"–11 NC STAINLESS TYPE 304 STEEL SOCKET HEAD (ALLEN HEAD) BOLTS, 2" LONG, WHERE REQUIRED. ALL LIDS TO BE LOCKED OUTSIDE OF ROADWAY.
2. FRAME MATERIAL IS CAST IRON PER ASTM A48 CLASS 30 OR BETTER.
3. SET FRAME TO GRADE AND CONSTRUCT ROAD AND GUTTER TO BE FLUSH WITH FRAME.

# CITY OF GRANITE FALLS

STANDARD FRAME INSTALLATION

APPROVED: Warren W Parker

DATE: 10/18/2016

DWG. NO. SW-10

L:\GrFalls\15484 PW Stds\Storm Dtl\SW-10.dwg, 10/18/2016 5:14 PM, RUSSELL HORITA

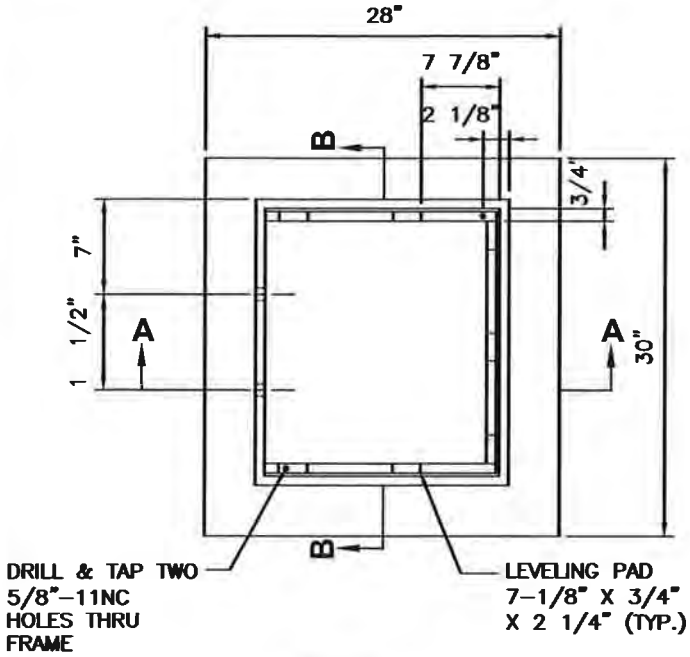


**PLAN**

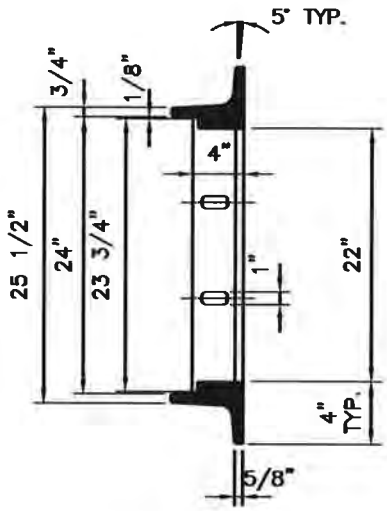


**SECTION B-B**

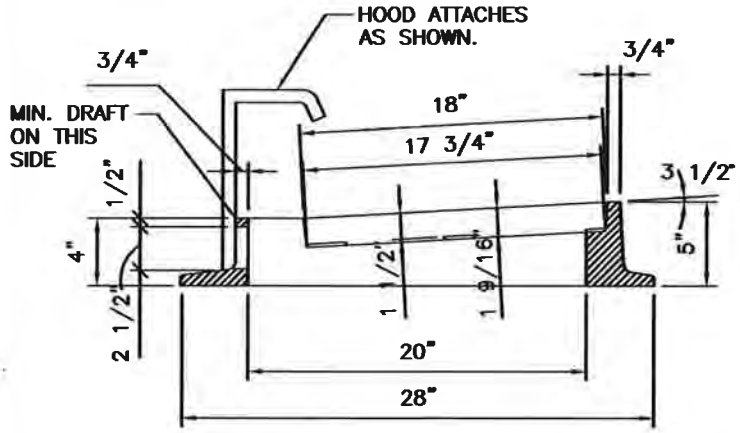


**SECTION A-A**

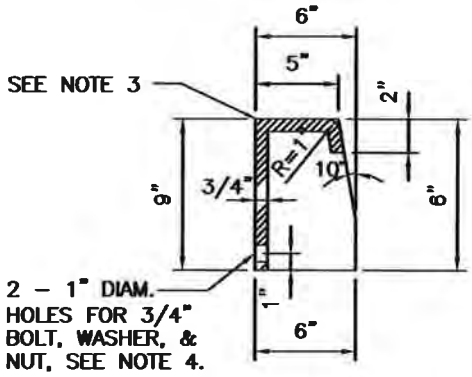


**SECTION C-C**

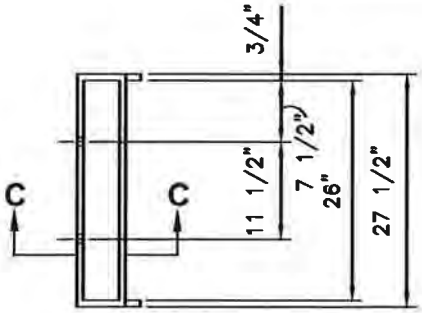


**HOOD DETAIL**

NOTES:

1. MATERIAL SHALL CONFORM TO SECTION 9-05.15(2) OF THE STANDARD SPECIFICATIONS.
2. PATTERN ON TOP SURFACE OF HOOD SHALL BE 3/16" NON-SKID DIAMOND.
3. BOLT, WASHER, AND NUT SHALL BE GALVANIZED OR CORROSION RESISTANT.

CITY OF GRANITE FALLS

THROUGH CURB INLET FRAME

APPROVED: Warren W Perkins

DATE: 10/18/2016

DWG. NO. SW-11

L:\GrFalls\15484 PW Stds\Storm Dtl\SW-11.dwg, 10/18/2016 5:14 PM, RUSSELL HORITA

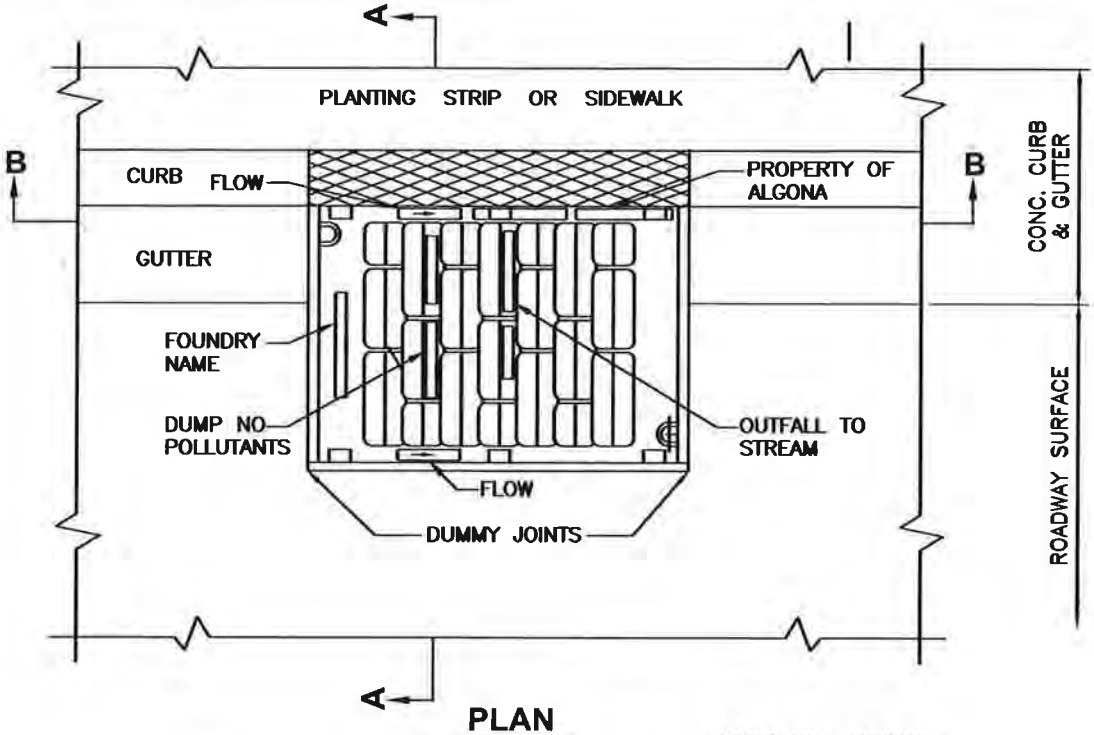


## PLAN

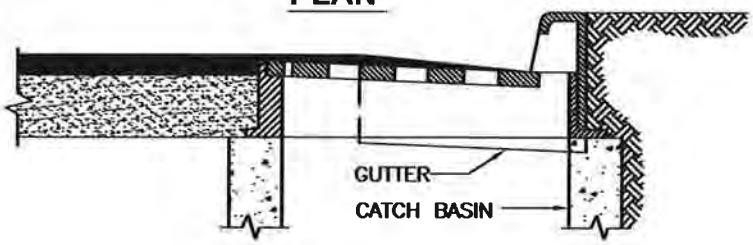


## SECTION A-A

NOTES:

1. SET TO GRADE AND CONSTRUCT ROAD AND GUTTER TO BE FLUSH WITH FRAME.
2. THROUGH CURB INLET TO BE USED IN SAG CURVES.

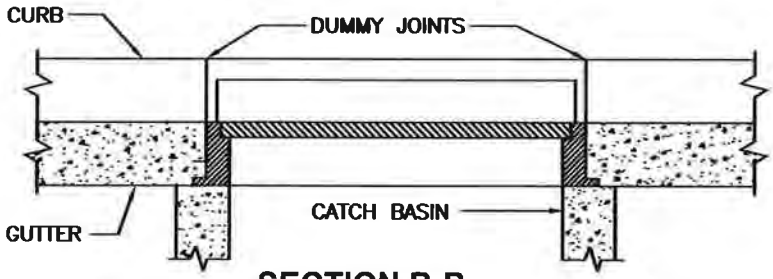


## SECTION B-B

# CITY OF GRANITE FALLS

THROUGH VERTICAL CURB INLET FRAME & GRATE

APPROVED: Warren R. Peterson

DATE: 10/18/2016

DWG. NO. SW-12

L:\GrFalls\15484 PW Stds\Storm Dtl\SW-12.dwg, 10/18/2016 5:14 PM, RUSSELL HORITA

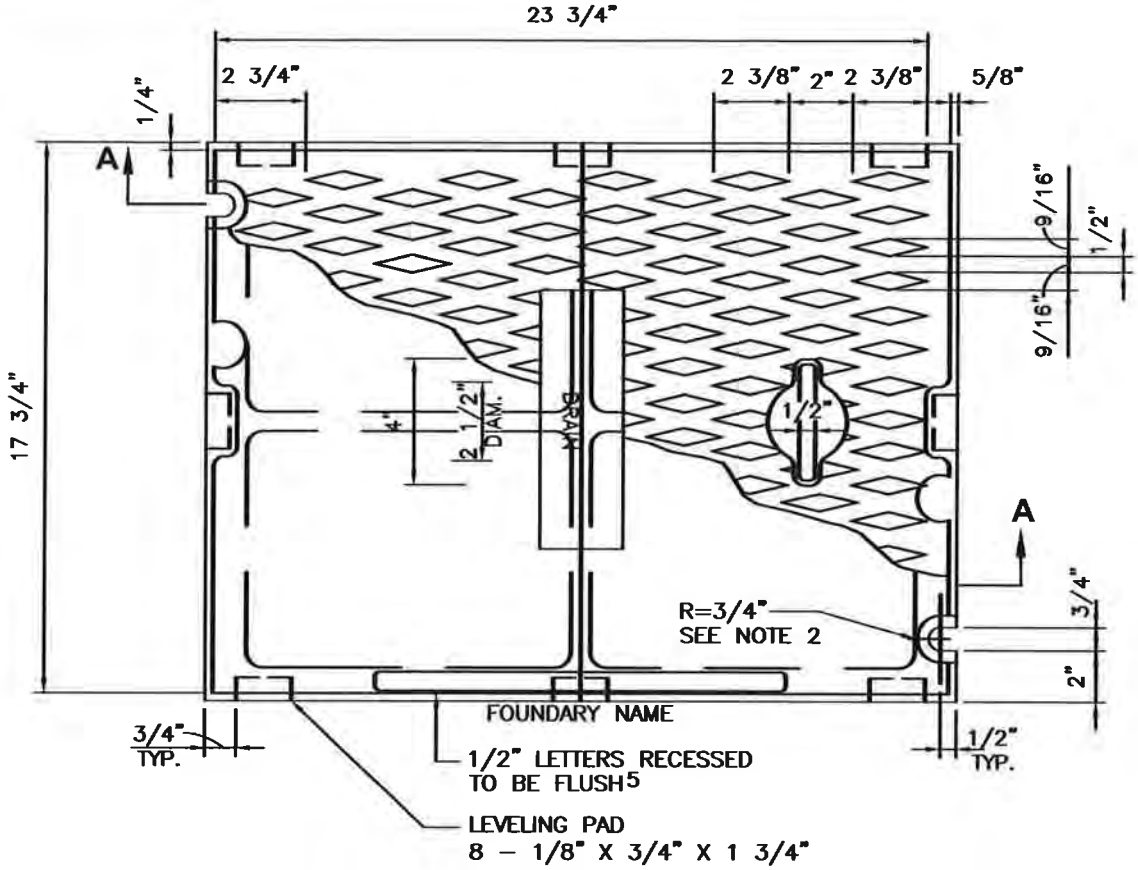


## PLAN VIEW

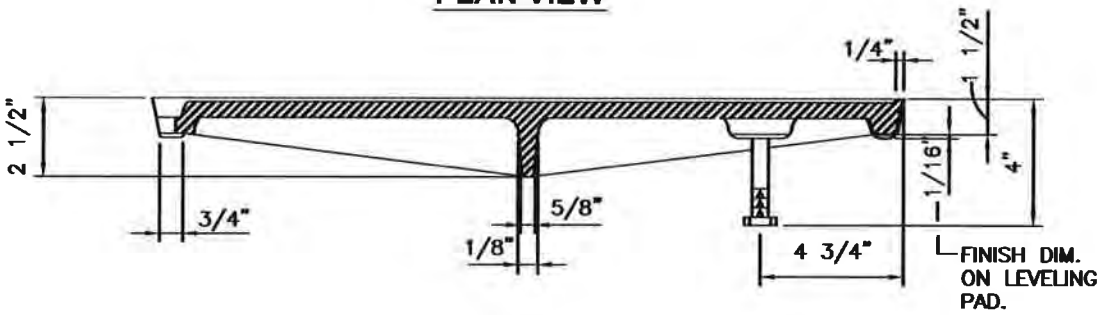


## SECTION A-A

NOTES:

1. USE WITH FRAME DRILLED AND TAPPED FOR LOCKING BOLTS.
2. USE WITH TWO LOCKING BOLTS 5/8"–11 NC STAINLESS STEEL TYPE 304 STEEL SOCKET HEAD (ALLEN HEAD) BOLTS, 2" LONG.
3. COVER MATERIAL IS CAST IRON PER ASTM A48 CLASS 30.
4. SHALL CONFORM TO SEC. 7.05 OF THE STANDARD SPECIFICATIONS.
5. COVER SHALL HAVE THE WORD "DRAIN" IN 2–INCH RAISED LETTERS.

| | | |
|---|---|---|
| | CITY OF GRANITE FALLS<br>SOLID STORM DRAIN COVER | |
| APPROVED: | | DWG. NO. |
| DATE: 10/18/2016 | | SW-7 |

L:\GrFalls\15484 PW Stds\Storm Dtl\SW-7.dwg, 10/18/2016 5:13 PM, RUSSELL HORITA

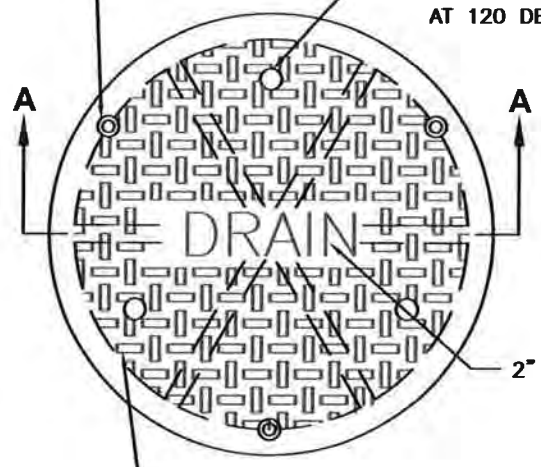


## COVER PLAN

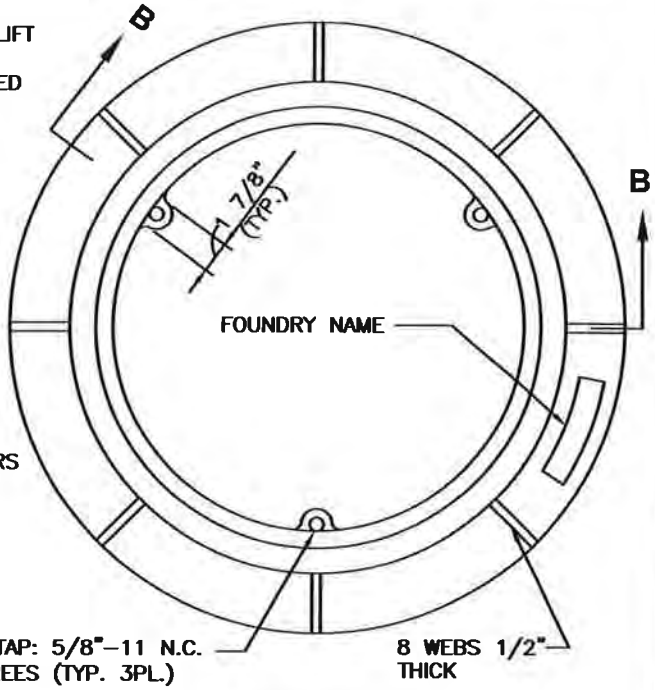


## RING PLAN

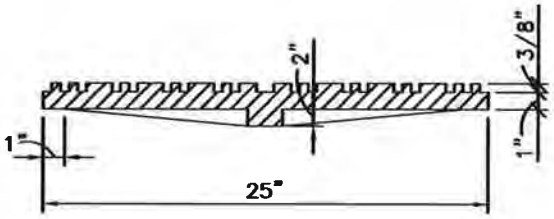


## SECTION A-A

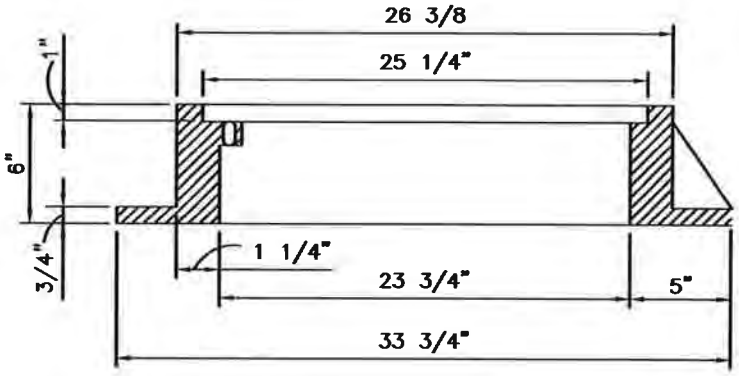


## SECTION B-B

GENERAL NOTES:

MANHOLE RING AND COVER SHALL BE OLYMPIC FOUNDRY MH30A D/T, OR EQUAL.

COVER NOTES:

1. USE WITH THREE LOCKING BOLTS 5/8"- 11 NC STAINLESS TYPE 304 STEEL SOCKET HEAD (ALLEN HEAD) BOLTS, 2" LONG. DRILL HOLES SPACED 120°, TO MATCH HOLES IN RING.
2. COVER MATERIAL IS DUCTILE IRON ASTM A536 GRADE 80-55-06.
3. SHALL CONFORM TO SEC. 9-05.15 OF THE STANDARD SPECIFICATIONS, AS MODIFIED HEREIN.
4. APPROXIMATE WEIGHT OF COVER IS 150 LBS.
5. RATING - H20.

RING NOTES:

1. DRILL AND TAP THREE 5/8"-11 NC HOLES THROUGH RING AT 120°.
2. RING MATERIAL IS GREY IRON, ASTM A-48 CLASS 30.
3. SHALL CONFORM TO SEC. 9-05.15 OF THE STANDARD SPECIFICATIONS, AS MODIFIED HEREIN.
4. APPROXIMATE WEIGHT OF RING IS 215 LBS.
5. RATING - H20.

CITY OF GRANITE FALLS

24" BOLT-LOCKING MANHOLE AND RING COVER

APPROVED: Naomi Parkinson

DATE: 10/18/2016

DWG. NO. SW-13

L:\GrFalls\15484 PW Stds\Storm Dtl\SW-13.dwg, 10/18/2016 5:15 PM, RUSSELL HORITA

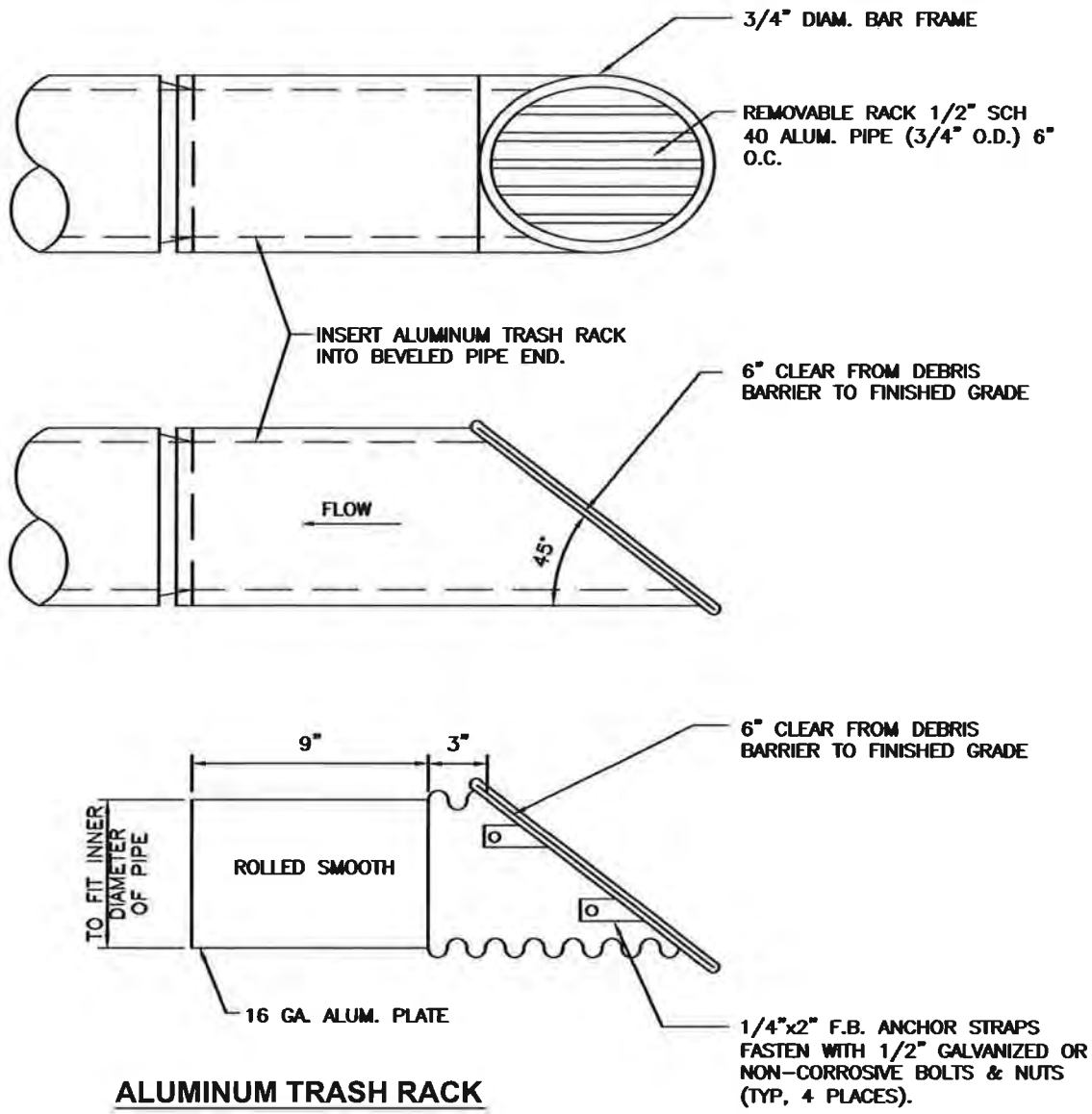


## ALUMINUM TRASH RACK

NOTES:

1. ALL STEEL PARTS MUST BE GALVANIZED & ASPHALT COATED (TREATMENT 1 OR BETTER).
2. CONTRACTOR TO VERIFY DIMENSIONS.

| | |
|---|---|
| CITY OF GRANITE FALLS<br>TRASH RACK<br>DEBRIS BARRIER | |
| APPROVED: Warren R. Ruhr<br>DATE: 10/18/2016 | DWG. NO.<br>SW-17 |

L:\GrFalls\15484 PW Stds\Storm Dtl\SW-17.dwg, 10/18/2016 5:15 PM, RUSSELL HORITA

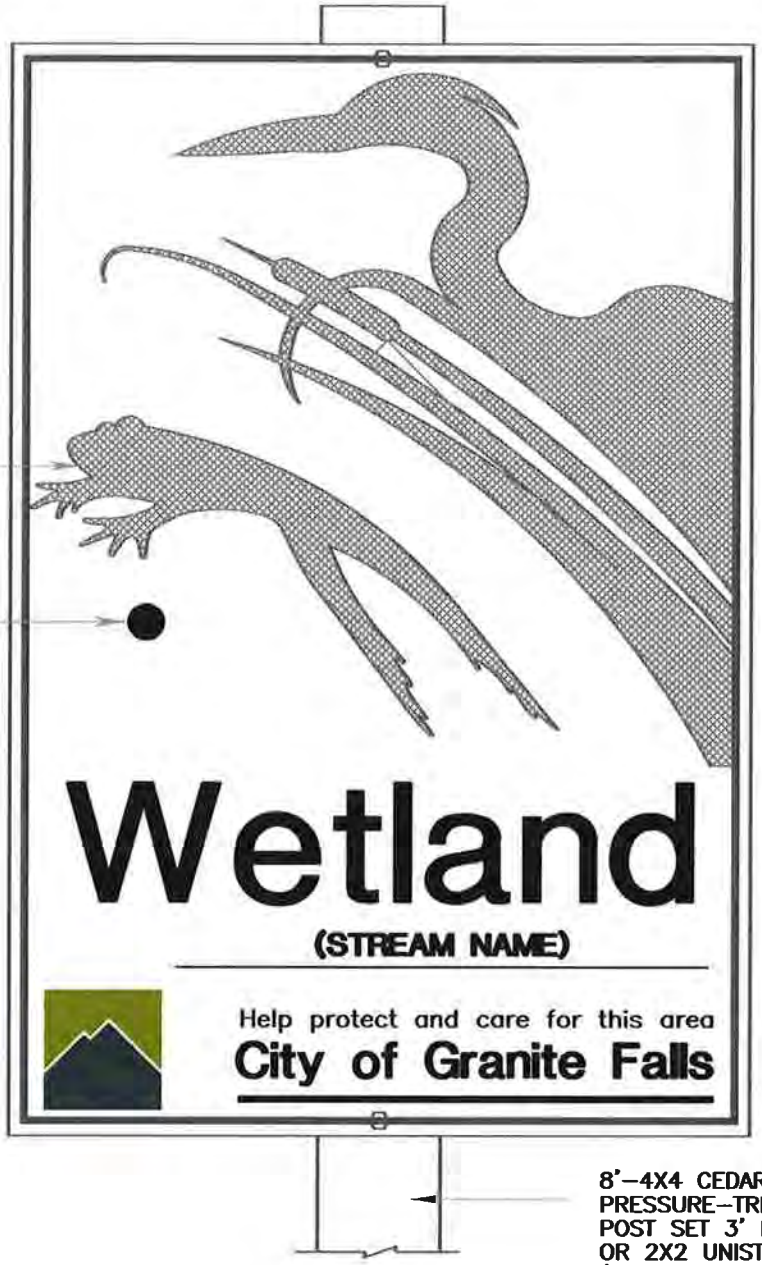


FOREGROUND COLOR: TEAL

BACKGROUND COLOR: BEIGE

SIGN SIZE: 24"X36"

8'–4X4 CEDAR OR PRESSURE–TREATED POST SET 3' IN GROUND OR 2X2 UNISTRUT (SEE STREET DETAILS)

NOTES:

1. ATTACH SIGN TO POST WITH TWO (2) 5/16 GALVANIZED LAG BOLTS WITH WASHERS.
2. THE WETLAND SIGN SHALL BE POSTED AT THE BOUNDARY BETWEEN THE SENSITIVE AREA BUFFER, SETBACK AREA OR SETBACK TRACT AND THE BUILDING SETBACK AREA.
3. SIGN SHALL BE STATIONED IN A PROMINENT LOCATION, I.E.: AT THE CLOSEST POINT TO THE PROPOSED DEVELOPMENT. SIGN MAY ALSO BE ATTACHED TO FENCES.
4. REPLACE "WETLAND" WITH "STREAM" IF APPLICABLE.

CITY OF GRANITE FALLS

WETLAND SIGN INSTALLATION

APPROVED: Warren W Perkins

DATE: 10/18/2016

DWG. NO. SW-28

L:\GrFalls\15484 PW Stds\Storm Dtl\SW-28.dwg, 10/31/2016 2:45 PM, WARREN PERKINS

# SANITARY SEWER DETAILS

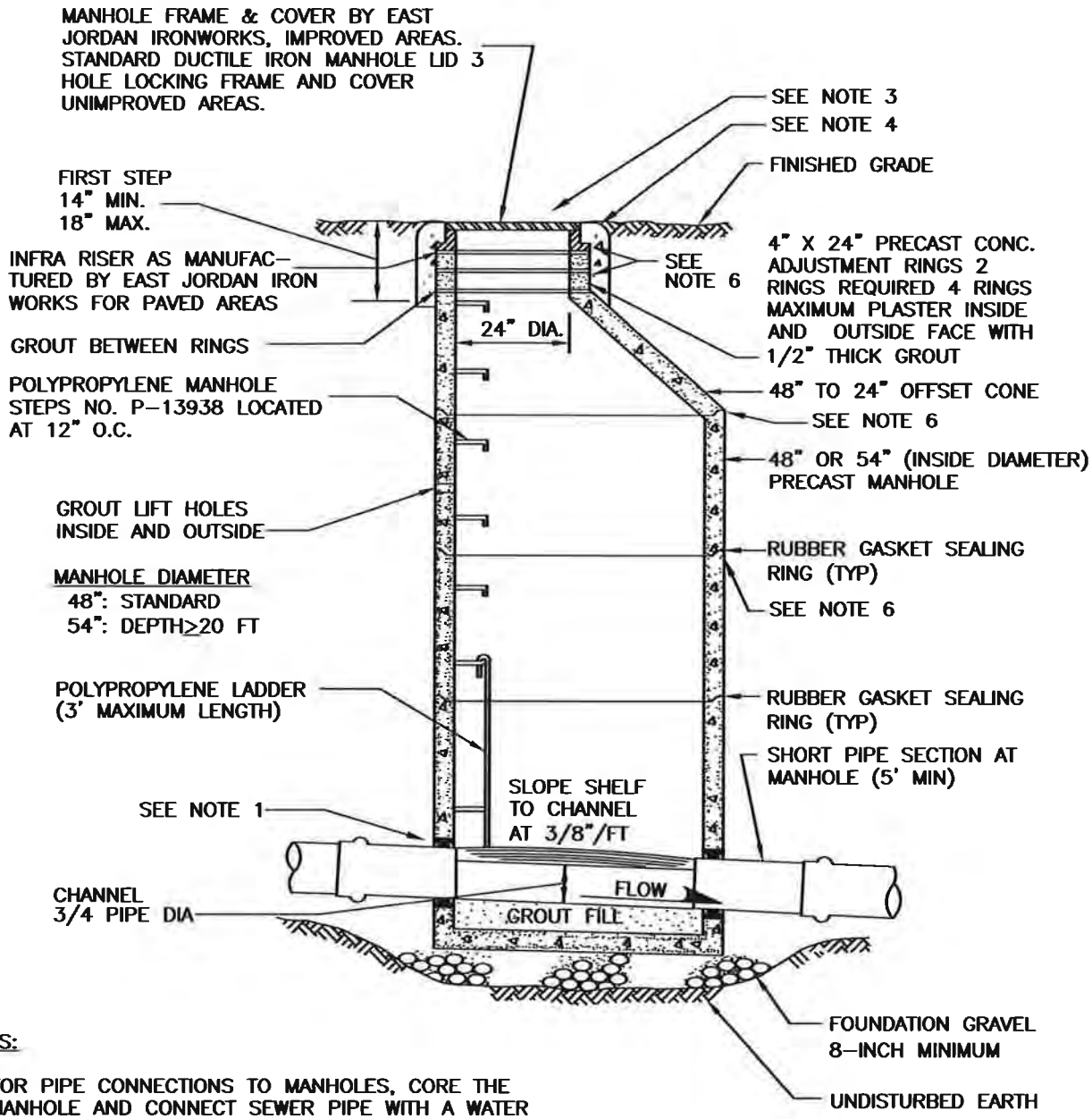


NOTES:

1. FOR PIPE CONNECTIONS TO MANHOLES, CORE THE MANHOLE AND CONNECT SEWER PIPE WITH A WATER TIGHT FLEXIBLE RUBBER BOOT IN MANHOLE WALL, KOR-N-SEAL BOOT OR EQUAL.
2. DROP OF GRADE THRU MANHOLE SHALL BE 0.10' (SLOPE=3/8"/FT) (48" MANHOLE) UNLESS OTHERWISE APPROVED BY THE CITY.
3. LARGER MANHOLES WILL BE REQUIRED AT THE DISCRETION OF THE CITY ENGINEER BASED ON PIPE SIZE, NUMBER AND ORIENTATION OF PIPE(S).
4. INSTALL CONCRETE COLLAR IN UNPAVED AREAS. SEE DETAIL.
5. PRE-CHANNELED MANHOLES ARE NOT ACCEPTABLE.
6. THE INSIDE AND OUTSIDE OF ALL JOINTS SHALL BE THOROUGHLY COATED WITH EPOXY GROUT (OR EQUAL) TO BE APPLIED ACCORDING TO MANUFACTURERS SPECIFICATIONS.
7. MANHOLES GREATER THAN 20 FEET DEEP SHALL BE A MINIMUM OF 54-INCHES INSIDE DIAMETER.

CITY OF GRANITE FALLS

TYPICAL PRECAST MANHOLE

APPROVED: Warren R. Perkins

DATE: 10/18/2016

DWG. NO.
TPMH

L:\GrFalls\15484 PW Stds\Sewer Dtl\TPMH.dwg, 12/5/2016 11:18 AM, WARREN PERKINS

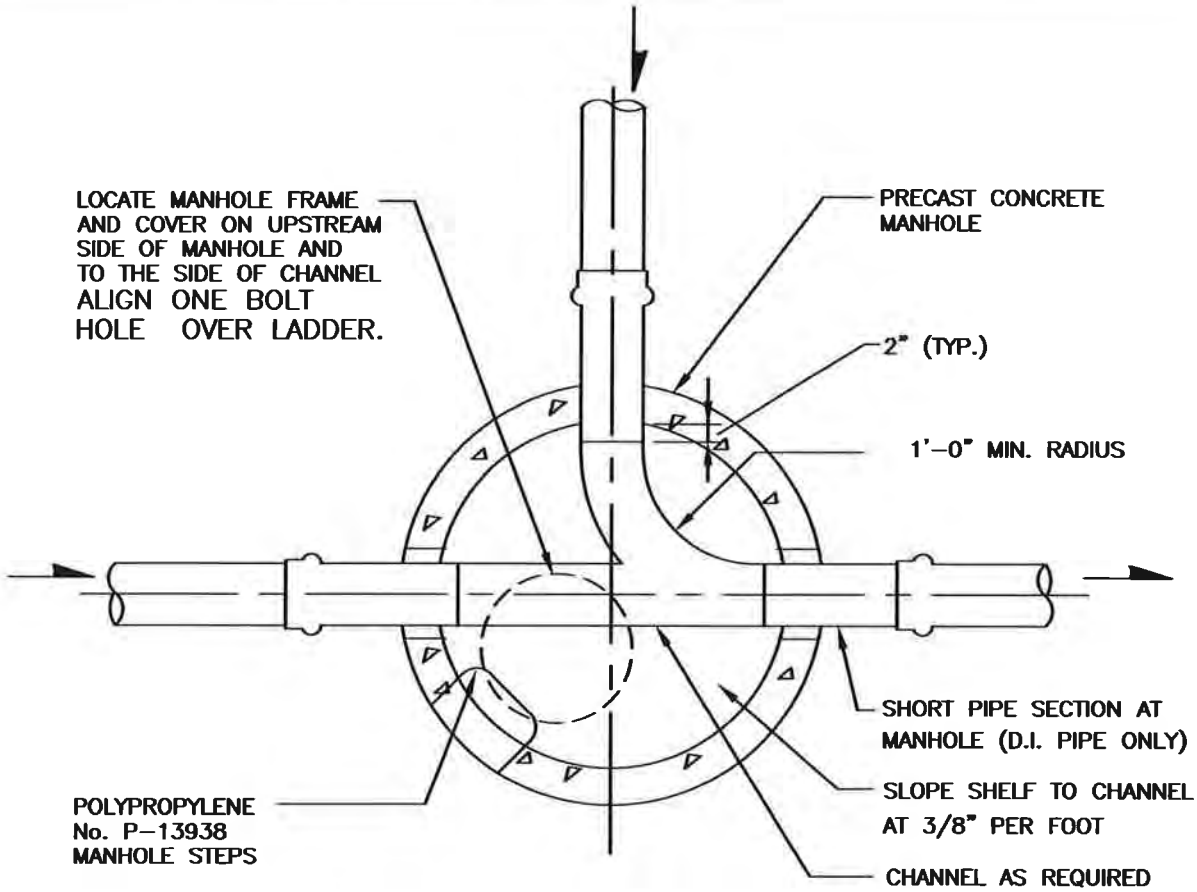


**NOTES:**

1. FOR PIPE CONNECTIONS TO MANHOLES, CORE THE MANHOLE AND CONNECT SEWER PIPE WITH A WATER TIGHT FLEXIBLE RUBBER BOOT IN MANHOLE WALL, KOR-N-SEAL BOOT OR EQUAL.
2. ALL CONNECTIONS TO EXISTING MANHOLES SHALL BE MADE WITH A CONCRETE CORING MACHINE UNLESS OTHERWISE APPROVED BY THE CITY.

CITY OF GRANITE FALLS

TYPICAL MANHOLE PLAN VIEW

APPROVED: Warren A. Perkins

DATE: 10/18/2016

DWG. NO. TMHP

L:\GrFalls\15484 PW Stds\Sewer Dtl\TMHP.dwg, 10/18/2016 3:29 PM, RUSSELL HORITA

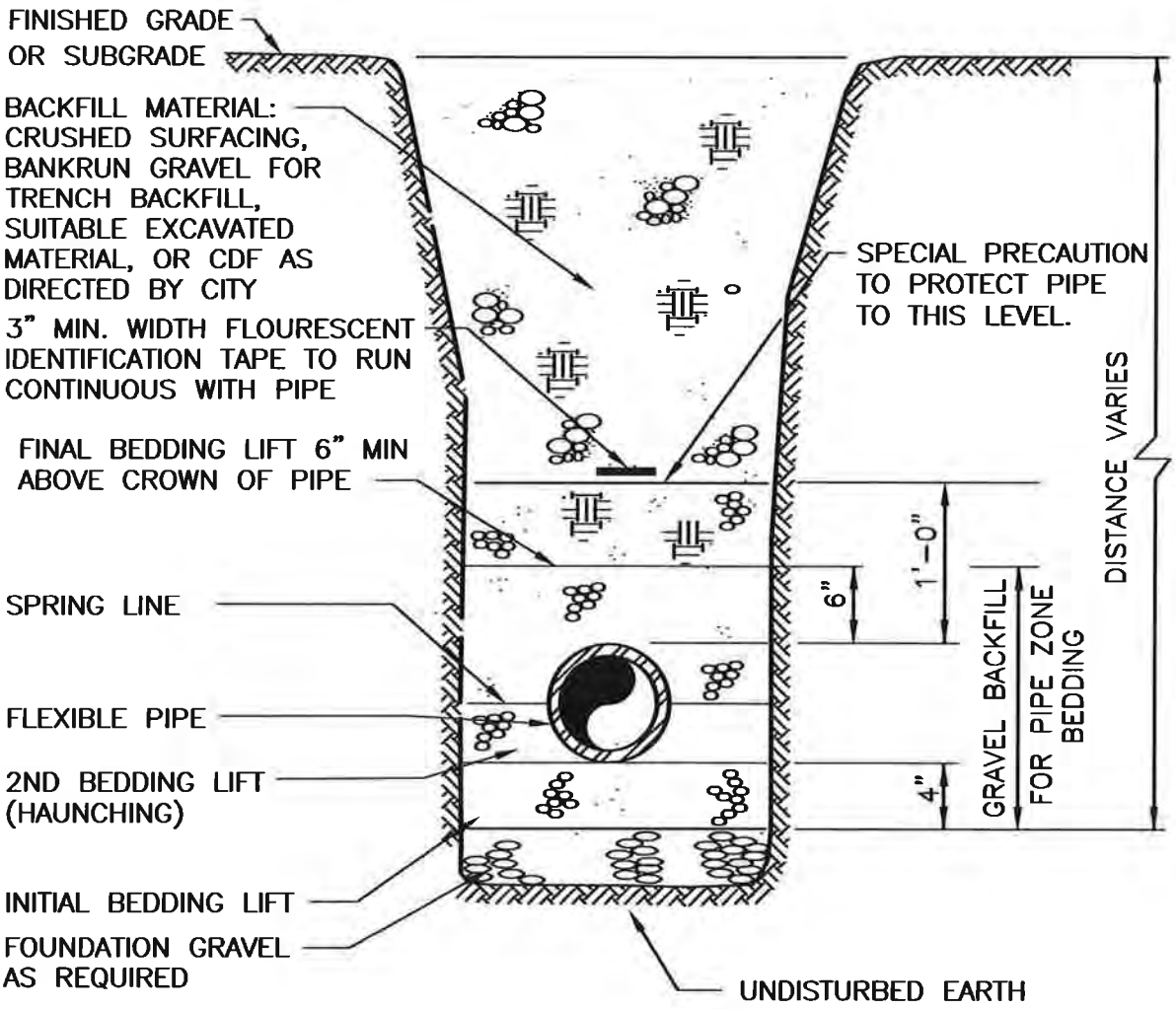


NOTE:

BACKFILL MATERIAL AND COMPACTION SHALL BE IN CONFORMANCE WITH CITY STANDARDS AND/OR THE STATE OR COUNTY PERMIT REQUIREMENTS (AS MAY BE APPLICABLE);

MINIMUM REQUIREMENTS:
ALL GRANULAR BACKFILL SHALL BE COMPACTED TO 95% MODIFIED PROCTOR, ASTM D1557.
SANITARY SEWER PIPE WITH 20 FEET OR GREATER OF COVER SHALL BE PVC C900.

| | |
|---|---|
| CITY OF GRANITE FALLS<br>TRENCH SECTION FOR FLEXIBLE PIPE | |
| APPROVED: Warren R Perkins<br>DATE: 10/18/2016 | DWG. NO.<br>SSTSFLEXP |

L:\GrFalls\15484 PW Stds\Sewer Dtl\SSTSFLEXP.dwg, 12/1/2016 11:16 AM, WARREN PERKINS

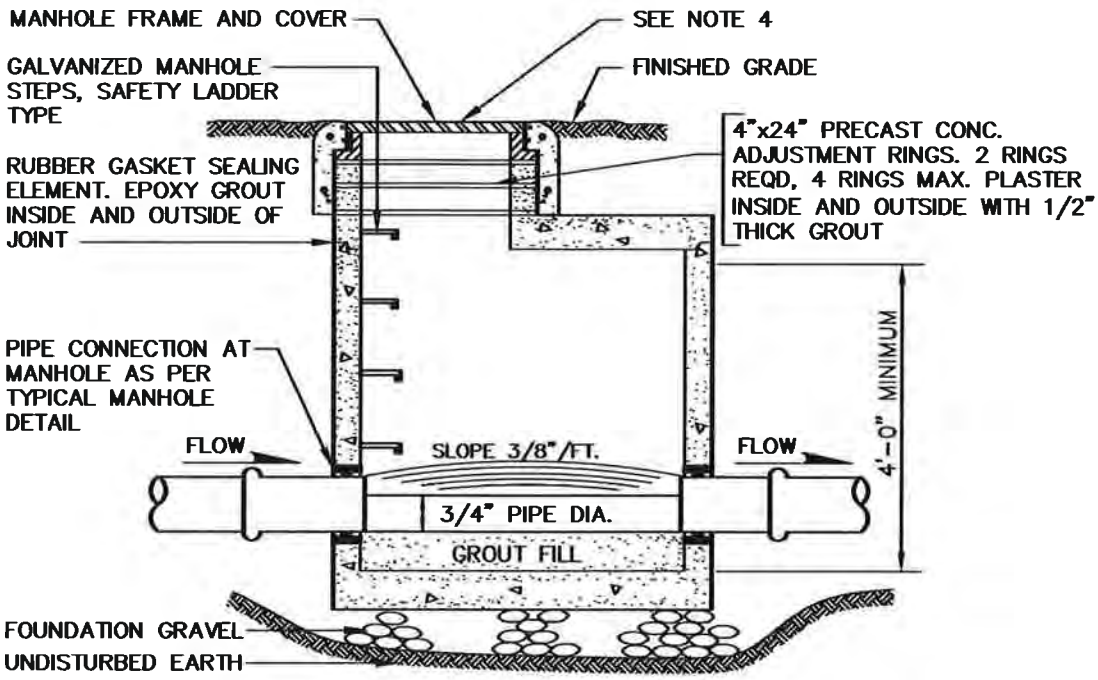


NOTES:

1. FOR PIPE CONNECTIONS TO MANHOLES CORE THE MANHOLE AND CONNECT SEWER PIPE WITH A WATER TIGHT FLEXIBLE RUBBER BOOT IN MANHOLE WALL, KOR-N-SEAL BOOT OR EQUAL. ALL CONNECTIONS TO EXISTING MANHOLES SHALL BE MADE WITH A CONCRETE CORING MACHINE UNLESS OTHERWISE APPROVED BY THE CITY.
2. DROP OF GRADE THRU MANHOLE SHALL BE 0.10'.
3. PRE-CHANNELED MANHOLES ARE NOT ACCEPTABLE.
4. CONSTRUCT CONCRETE COLLAR IN UNPAVED AREAS PER DETAIL.
5. THE INSIDE AND OUTSIDE OF ALL JOINTS SHALL BE THOROUGHLY COATED WITH EPOXY GROUT (OR EQUAL) TO BE APPLIED ACCORDING TO MANUFACTURERS SPECIFICATIONS.

CITY OF GRANITE FALLS

SHALLOW PRECAST MANHOLE

APPROVED: Warren H Pickles

DATE: 10/18/2016

DWG. NO. TS-PMH

L:\GrFalls\15484 PW Stds\Sewer Dtl\TS-PMH.dwg, 10/18/2016 3:29 PM, RUSSELL HORITA

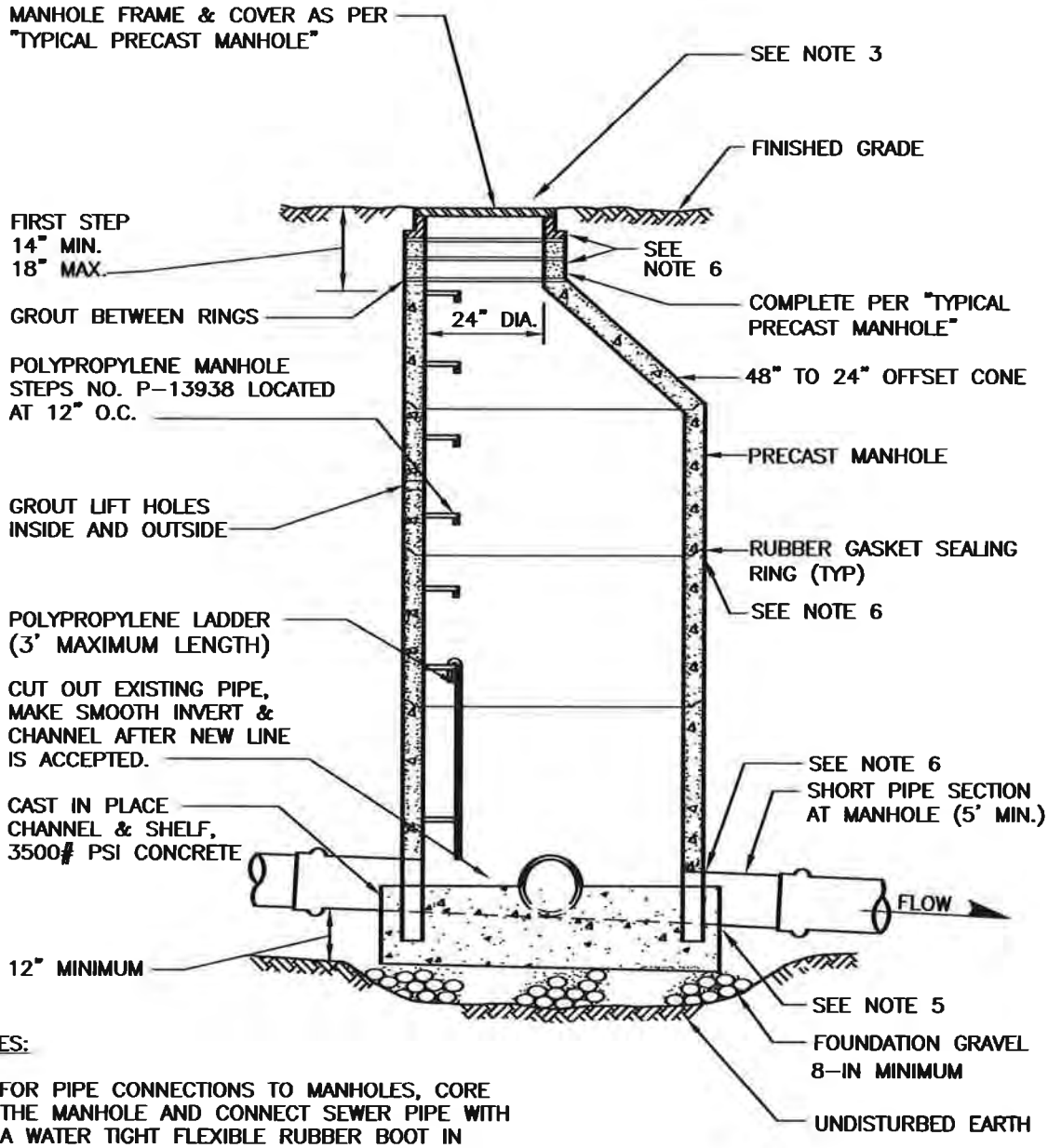


NOTES:

1. FOR PIPE CONNECTIONS TO MANHOLES, CORE THE MANHOLE AND CONNECT SEWER PIPE WITH A WATER TIGHT FLEXIBLE RUBBER BOOT IN MANHOLE WALL, KOR-N-SEAL BOOT OR EQUAL.
2. DROP OF GRADE THRU MANHOLE SHALL BE 0.10' (SLOPE=3/8"/FT) (48" MANHOLE) UNLESS OTHERWISE APPROVED BY CITY INSPECTOR.
3. LARGER MANHOLES WILL BE REQUIRED AT THE DISCRETION OF THE CITY ENGINEER BASED ON PIPE SIZE, NUMBER AND ORIENTATION OF PIPE(S).
4. INSTALL CONCRETE COLLAR IN UNPAVED AREAS. SEE DETAIL.
5. PRE-CHANNELED MANHOLES ARE NOT ACCEPTABLE.
6. THE INSIDE AND OUTSIDE OF ALL JOINTS SHALL BE THOROUGHLY COATED WITH EPOXY GROUT (THOROC OR EQUAL) TO BE APPLIED ACCORDING TO MANUFACTURERS SPECIFICATIONS.

CITY OF GRANITE FALLS

TYPICAL SADDLE MANHOLE

APPROVED: Warren Ho Perkins

DATE: 10/18/2016

DWG. NO. TSMH

L:\GrFalls\15484 PW Stds\Sewer Dtl\TSMH.dwg, 10/18/2016 3:29 PM, RUSSELL HORITA

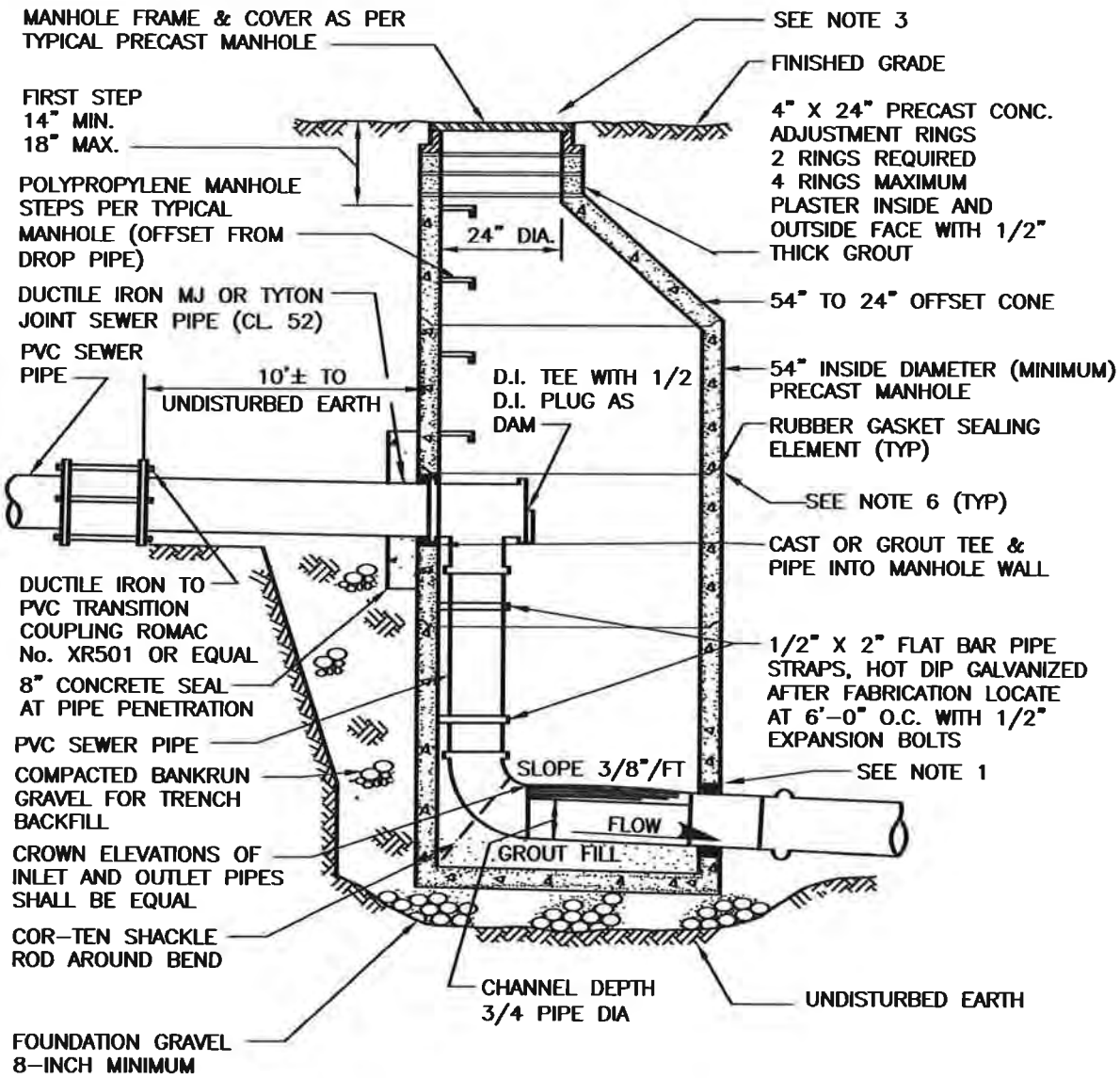


NOTES:

1. FOR PIPE CONNECTIONS, CORE THE MANHOLE AND CONNECT SEWER PIPE WITH A WATER TIGHT FLEXIBLE RUBBER BOOT IN MANHOLE WALL, KOR-N-SEAL BOOT OR EQUAL.
2. DROP OF GRADE THRU MANHOLE SHALL BE 0.10' (SLOPE=3/8"/FT) UNLESS OTHERWISE APPROVED BY CITY INSPECTOR.
3. LARGER MANHOLES WILL BE REQUIRED AT THE DISCRETION OF THE CITY ENGINEER BASED ON PIPE SIZE, NUMBER AND ORIENTATION OF PIPE(S).
4. INSTALL CONCRETE COLLAR IN UNPAVED AREAS. SEE DETAIL.
5. PRE-CHANNELED MANHOLE ARE NOT ACCEPTABLE.
6. THE INSIDE AND OUTSIDE OF ALL JOINTS SHALL BE THOROUGHLY COATED WITH EPOXY GROUT (THOROC OR EQUAL) TO BE APPLIED ACCORDING TO MANUFACTURERS SPECIFICATIONS.

| | |
|---|---|
| CITY OF GRANITE FALLS<br>INSIDE DROP MANHOLE | |
| APPROVED: Warren H Rietz<br>DATE: 10/18/2016 | DWG. NO.<br>IDMH |

L:\GrFalls\15484 PW Stds\Sewer Dt\IDMH.dwg, 10/18/2016 3:26 PM, RUSSELL HORITA

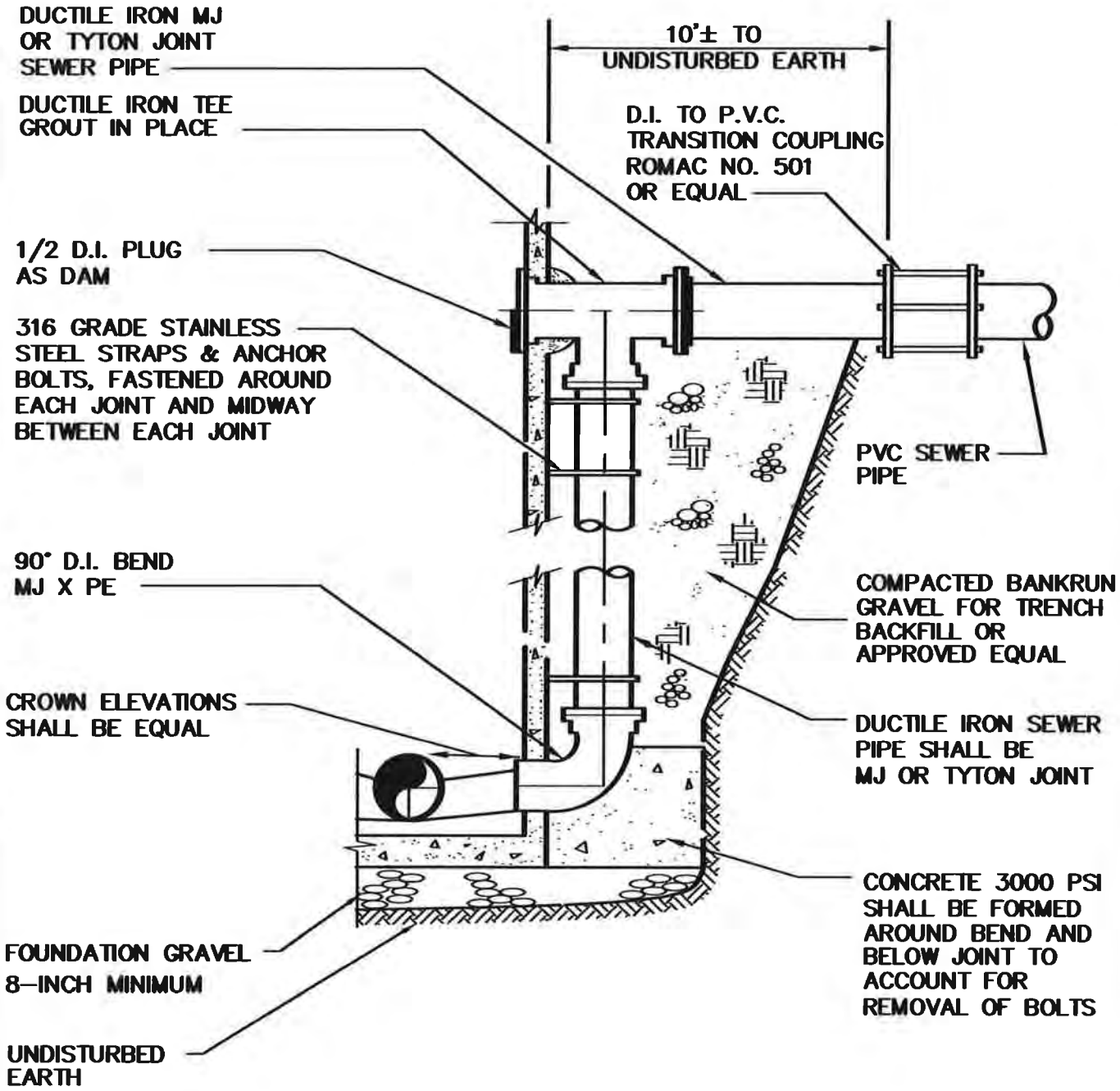


CITY OF GRANITE FALLS

**OUTSIDE DROP MANHOLE**

APPROVED: Warren R Perkins

DATE: 10/18/2016

DWG. NO. ODMH

L:\GrFalls\15484 PW Stds\Sewer Dtl\ODMH.dwg, 12/1/2016 10:59 AM, WARREN PERKINS

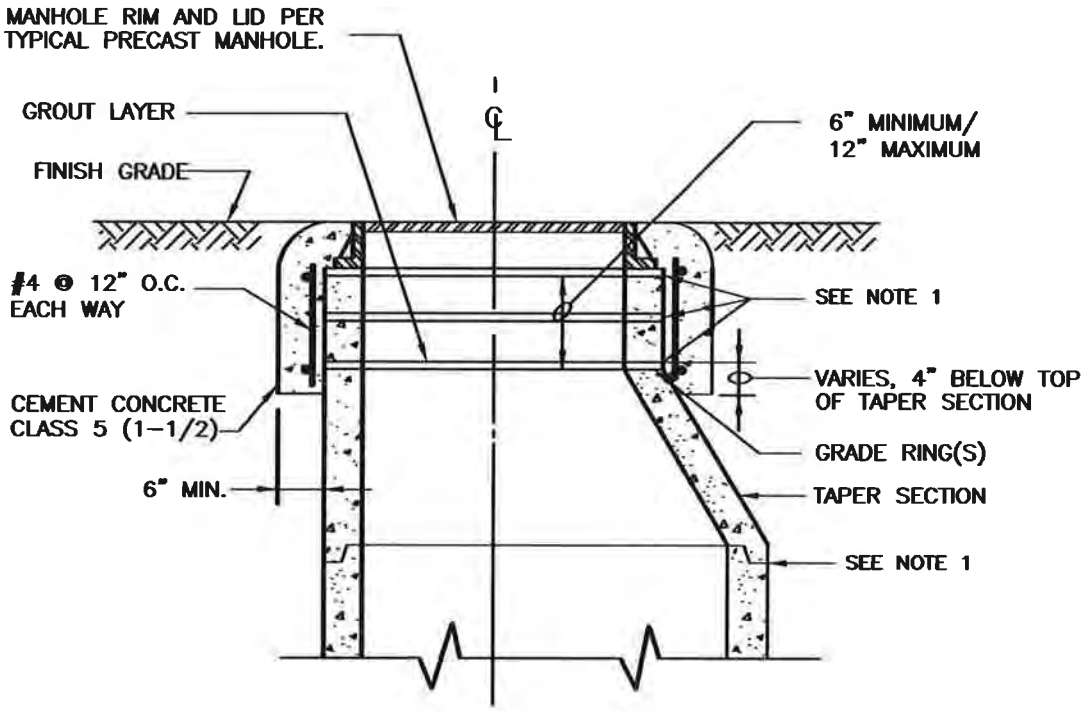


## SECTION

**NOTES:**

1. CONSTRUCT CONCENTRIC CONCRETE COLLARS AROUND ALL MANHOLE FRAMES LOCATED OUTSIDE OF PAVEMENT AREAS. COMPLETE WITH 2-INCH ASPHALT ABOVE COLLAR IF IN ASPHALT.

2. THE INSIDE AND OUTSIDE OF ALL JOINTS SHALL BE THOROUGHLY COATED WITH EPOXY GROUT (THOROC OR EQUAL) TO BE APPLIED ACCORDING TO MANUFACTURERS SPECIFICATIONS.

| | |
|---|---|
| CITY OF GRANITE FALLS<br>MANHOLE FRAME & COLLAR<br>UNIMPROVED AREAS | |
| APPROVED: Warren R. Perkins<br>DATE: 10/18/2016 | DWG. NO.<br>MHCLAR |

L:\GrFalls\15484 PW Stds\Sewer Dtl\MHCLAR.dwg, 12/5/2016 11:03 AM, WARREN PERKINS

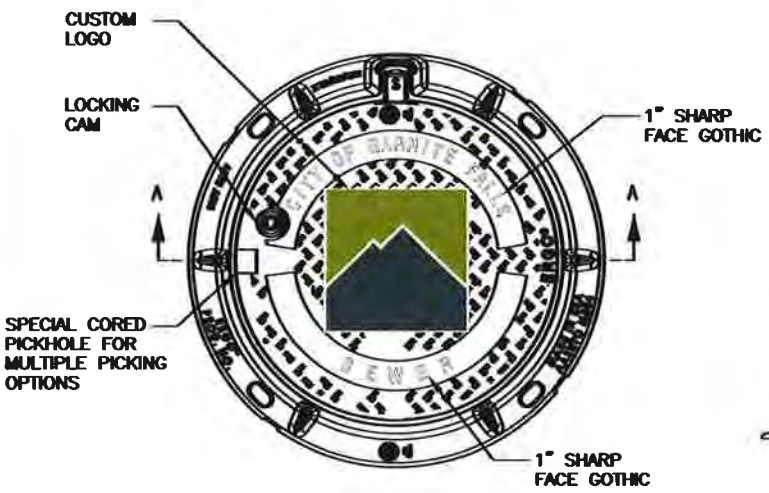


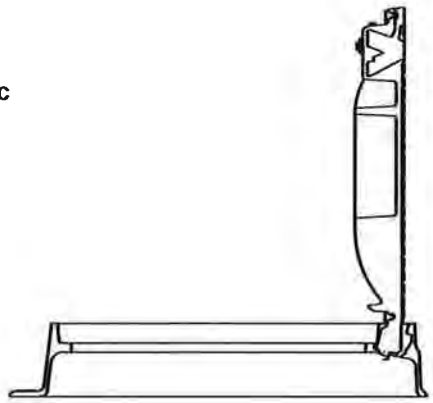

SAFETY LOCK @ 90°

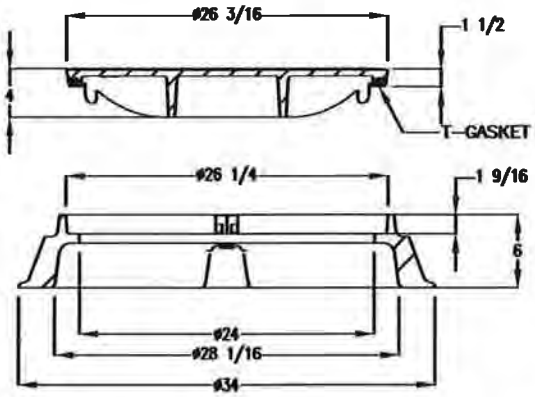


SECTION A-A

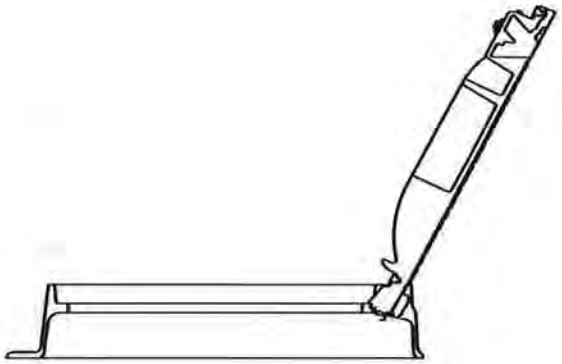

FULLY OPENED @ 120°

EAST JORDAN IRON WORKS
MODEL NO. 00104043L04
ERGO 24 WITH CITY LOGO
AND RAISED LETTERS

USE EAST JORDAN
INFRARISER FOR TOP 0.5
TO 3 INCHES BELOW LID

CITY OF GRANITE FALLS

MANHOLE LID
IMPROVED AREAS

APPROVED: Warren W Perkins

DATE: 10/18/2016

DWG. NO.
SSMH LID

L:\GrFalls\15484 PW Stds\Sewer Dtl\SSMH LID.dwg, 12/5/2016 11:21 AM, WARREN PERKINS

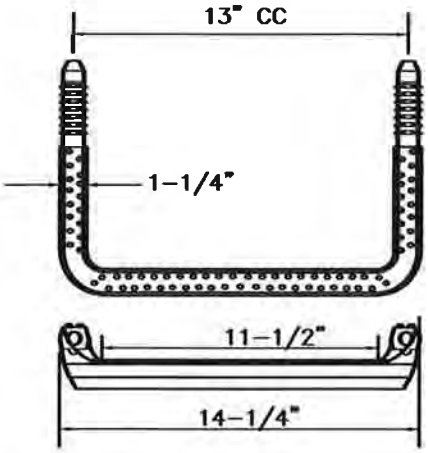


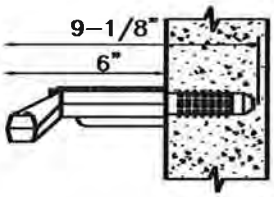


POLYPROPYLENE STEP, LANE NO. P-13938 OR EQUAL

**POLYPROPYLENE MANHOLE STEPS**

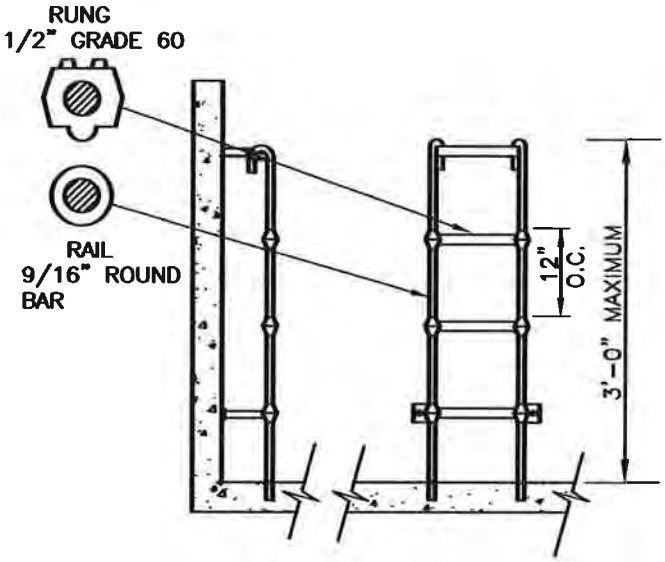


LADDER SHALL CONFORM TO POLYPROPYLENE ASTM D-4101 1/2" GRADE 60 REINFORCING BAR A-615 9/16" COLD DRAWN BAR C-1018

**POLYPROPYLENE LADDER**

| | | |
|---|---|---|
| CITY OF GRANITE FALLS<br>POLYPROPELENE LADDER AND MANHOLE STEPS | | |
| APPROVED: Warren A Parker<br>DATE: 10/18/2016 | | DWG. NO.<br>PLMHS |

L:\GrFalls\15484 PW Stds\Sewer Dtl\PLMHS.dwg, 10/18/2016 3:27 PM, RUSSELL HORITA

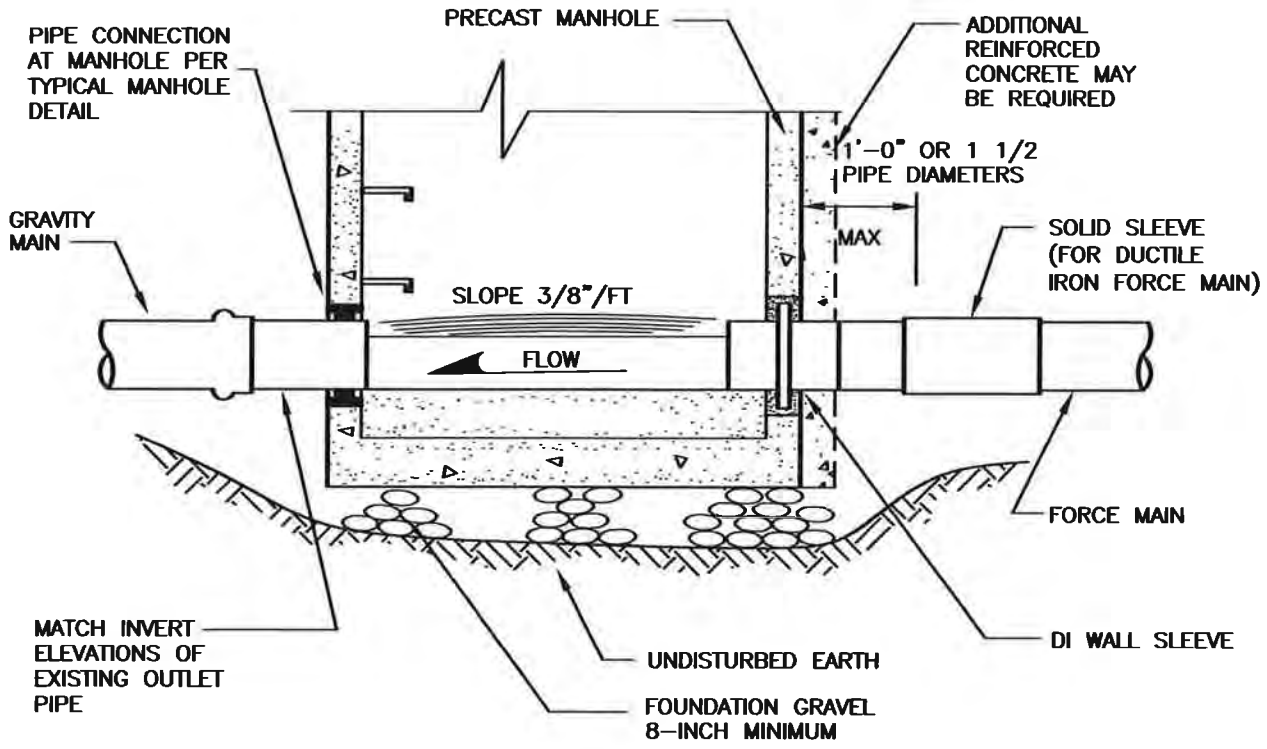


**NOTES:**

1. FOR PIPE CONNECTIONS TO MANHOLES, CORE THE MANHOLE AND CONNECT SEWER PIPE WITH A WATER TIGHT FLEXIBLE RUBBER BOOT IN MANHOLE WALL, KOR-N-SEAL BOOT OR EQUAL.
2. DROP OF GRADE THRU MANHOLE SHALL BE 0.10' (MIN), UNLESS OTHERWISE APPROVED.
3. ALIGN FORCE MAIN DISCHARGE WITH OUTLET PIPE.
4. ODOR CONTROL AND OR SPECIAL COATING MAY BE REQUIRED AT DISCHARGE MANHOLE.

CITY OF GRANITE FALLS

FORCE MAIN DISCHARGE MANHOLE

APPROVED: Warren A. Perkins

DATE: 10/18/2016

DWG. NO. FMDMH

L:\GrFalls\15484 PW Stds\Sewer Dtl\FMDMH.dwg, 10/18/2016 3:25 PM, RUSSELL HORITA

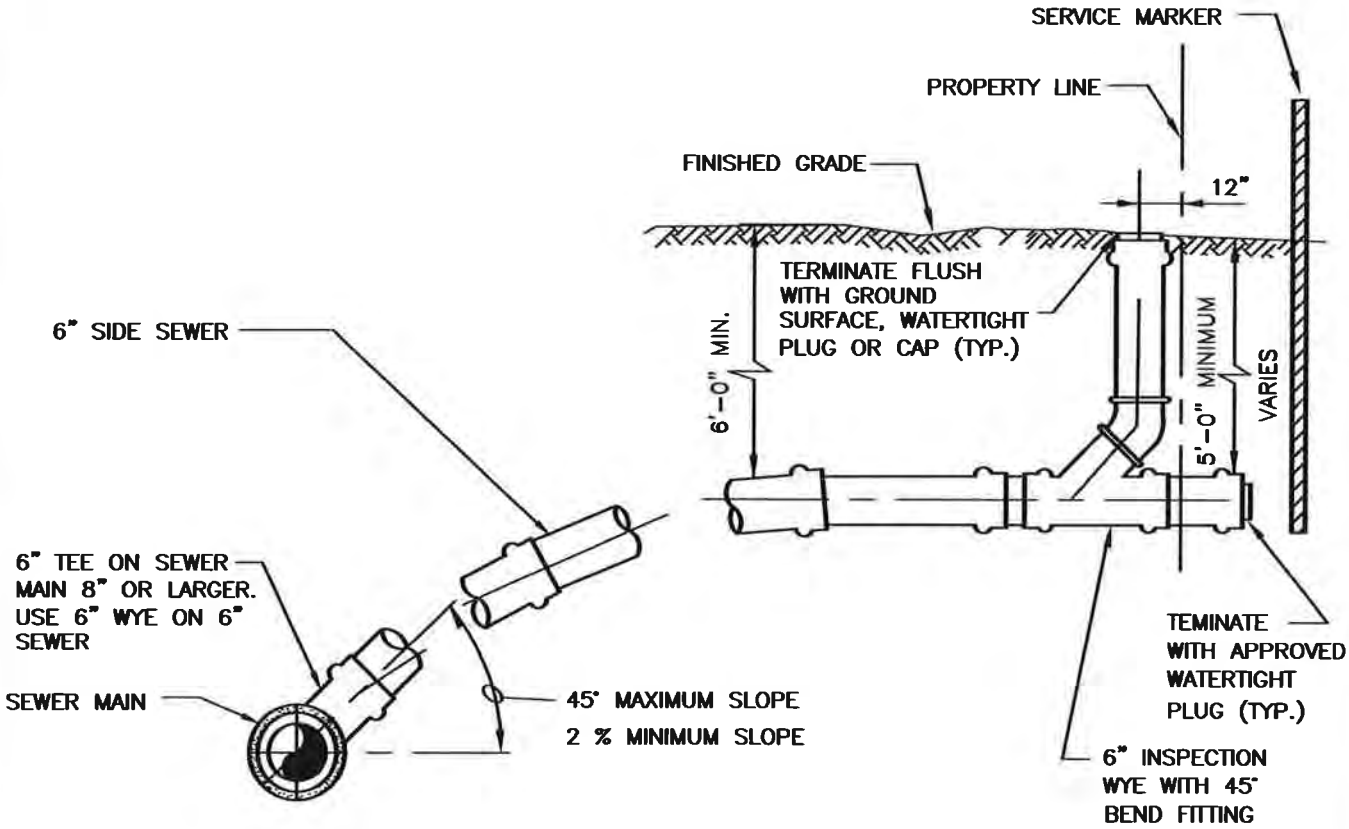


NOTE:

1. PAINT PORTION OF SERVICE MARKER THAT IS ABOVE FINISHED GRADE WITH WHITE PAINT. STENCIL WITH BLACK LETTERS "S/S" USING 3" HIGH LETTERS. LOCATE SERVICE MARKER AT END OF EACH SERVICE. STENCIL TOTAL LENGTH OF 2x4.
2. TAP EXISTING SEWER MAIN WITH APPROVED CITY SADDLE. INSTALL NEW SIDE SEWER TEE ON NEW MAIN LINES. INSERTA-TEE OR EQUAL.
3. WHEN TAPPED SERVICE IS PERMITTED, CONTRACTOR SHALL PROVIDE SEWER MAIN COUPON TO CITY STAFF.
4. PIPE BEDDING PER FLEXIBLE PIPE DETAIL.

CITY OF GRANITE FALLS

NEW SIDE SEWER SERVICE

APPROVED: Warren W Parks

DATE: 10/18/2016

DWG. NO. SSD

L:\GrFalls\15484 PW Stds\Sewer Dtl\SSD.dwg, 10/18/2016 3:28 PM, RUSSELL HORITA

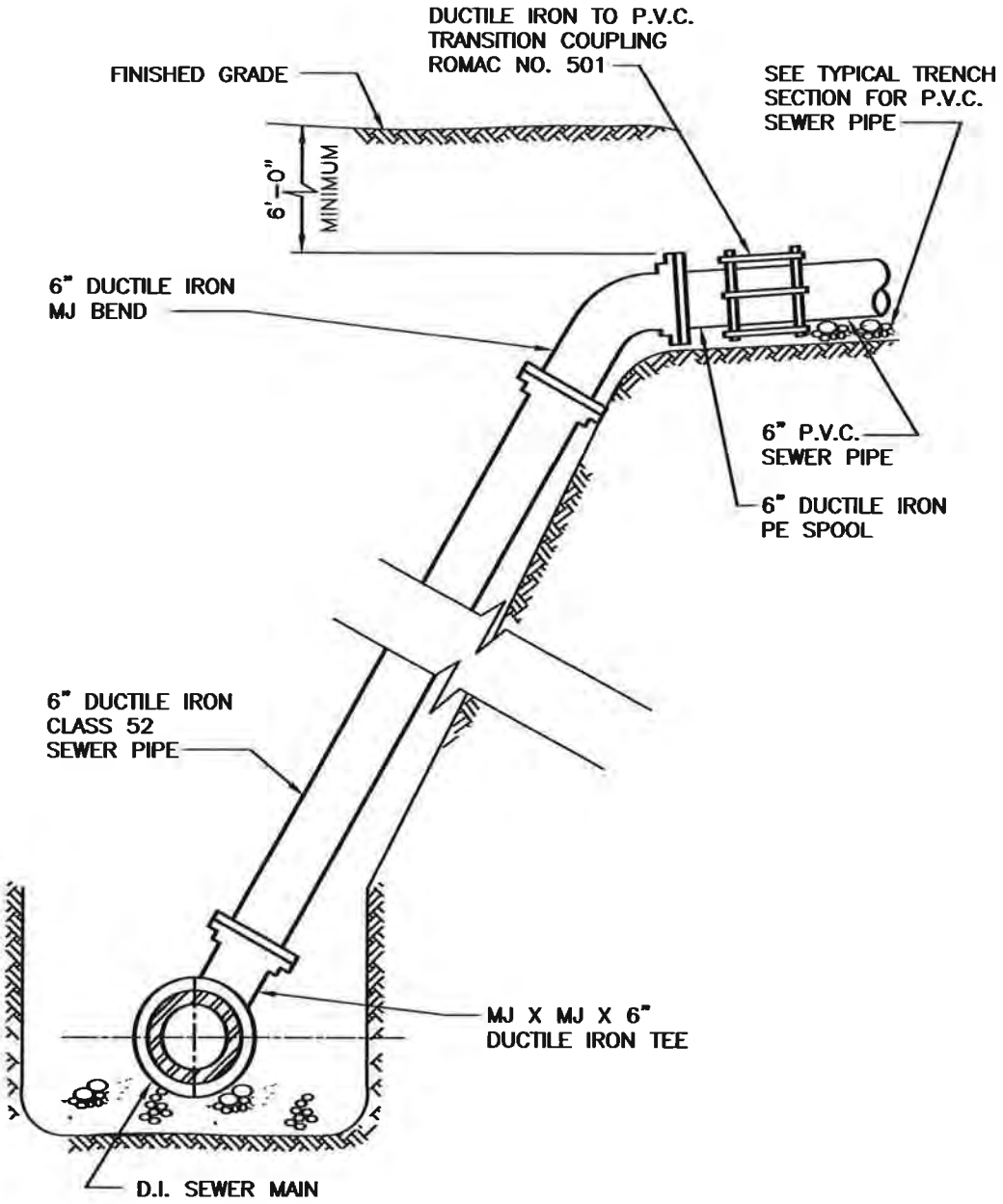


**NOTE:**

SEE TYPICAL TRENCH SECTION
FOR DUCTILE IRON SEWER PIPE
FLEXIBLE OR RIGID PIPE
AS APPROPRIATE

# CITY OF GRANITE FALLS

STANDING SIDE SEWER

APPROVED: [signature]

DATE: 10/18/2016

DWG. NO.
SSS

L:\GrFalls\15484 PW Stds\Sewer Dtl\SSS.dwg, 10/18/2016 3:28 PM, RUSSELL HORITA

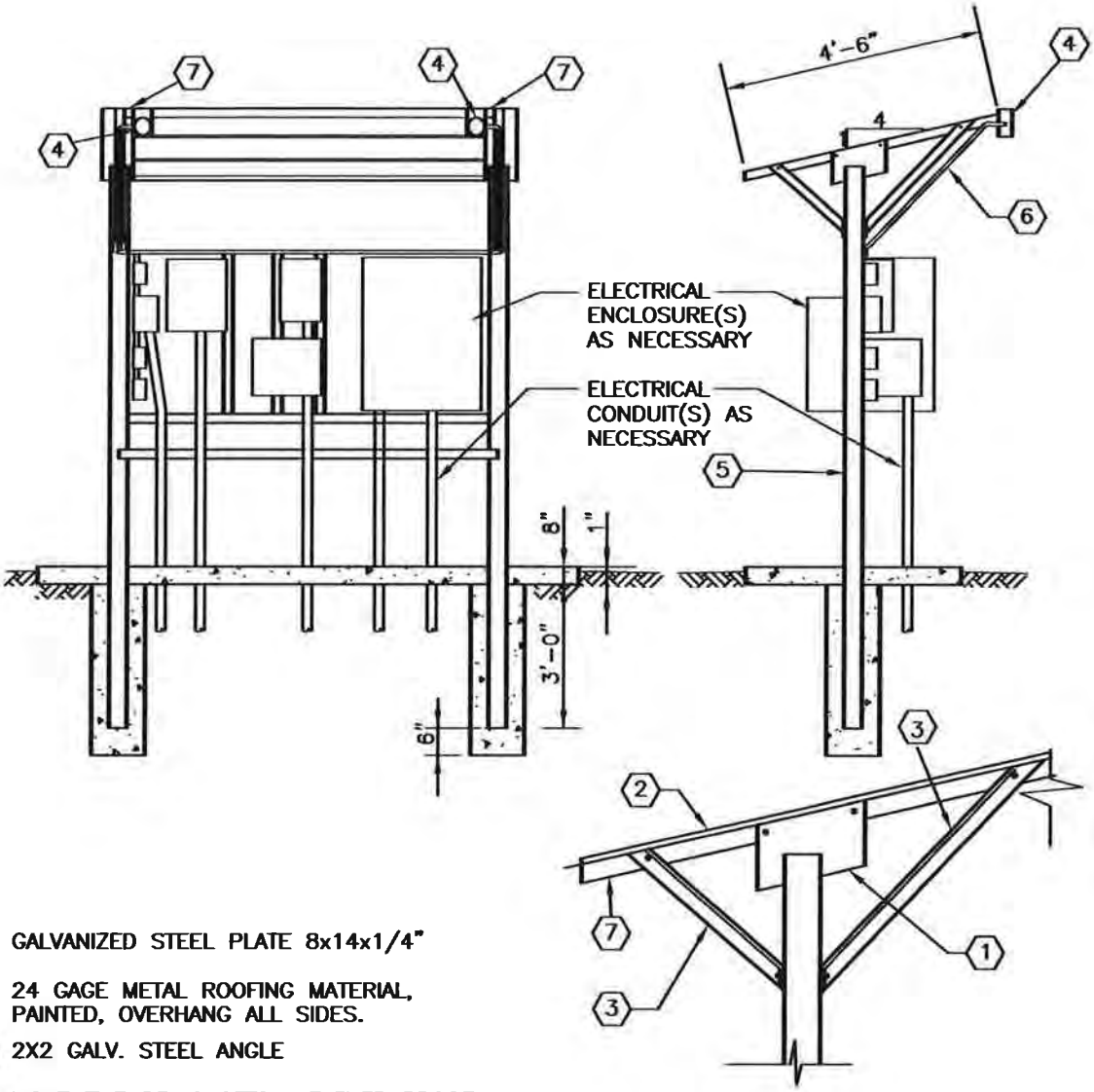


1. GALVANIZED STEEL PLATE 8x14x1/4"
2. 24 GAGE METAL ROOFING MATERIAL, PAINTED, OVERHANG ALL SIDES.
3. 2X2 GALV. STEEL ANGLE
4. LIGHT FIXTURE, 2 SETS, WEATHER PROOF CAST ALUMINUM BOX AND COVER 2 150 WATT FLOOD LIGHTS EACH (ADJUSTABLE)
5. 6" I.D. ELECTRICAL GALV. CONDUIT (SCHEDULE 40) CLOSED TOP (WELDED)
6. ELECTRICAL CONDUIT, 3/4" GALV.
7. 2-1/2" SQUARE TUBE STEEL, 1/4" WALL WITH 4 ROOF SUPPORT STRINGERS.

# CITY OF GRANITE FALLS

ROOF STRUCTURE FOR ELECTRICAL ENCLOSURE

APPROVED: Warren W Perkins

DATE: 10/18/2016

DWG. NO. RSEE

L:\GrFalls\15484 PW Stds\Sewer Dtl\RSEE.dwg, 10/18/2016 3:27 PM, RUSSELL HORITA

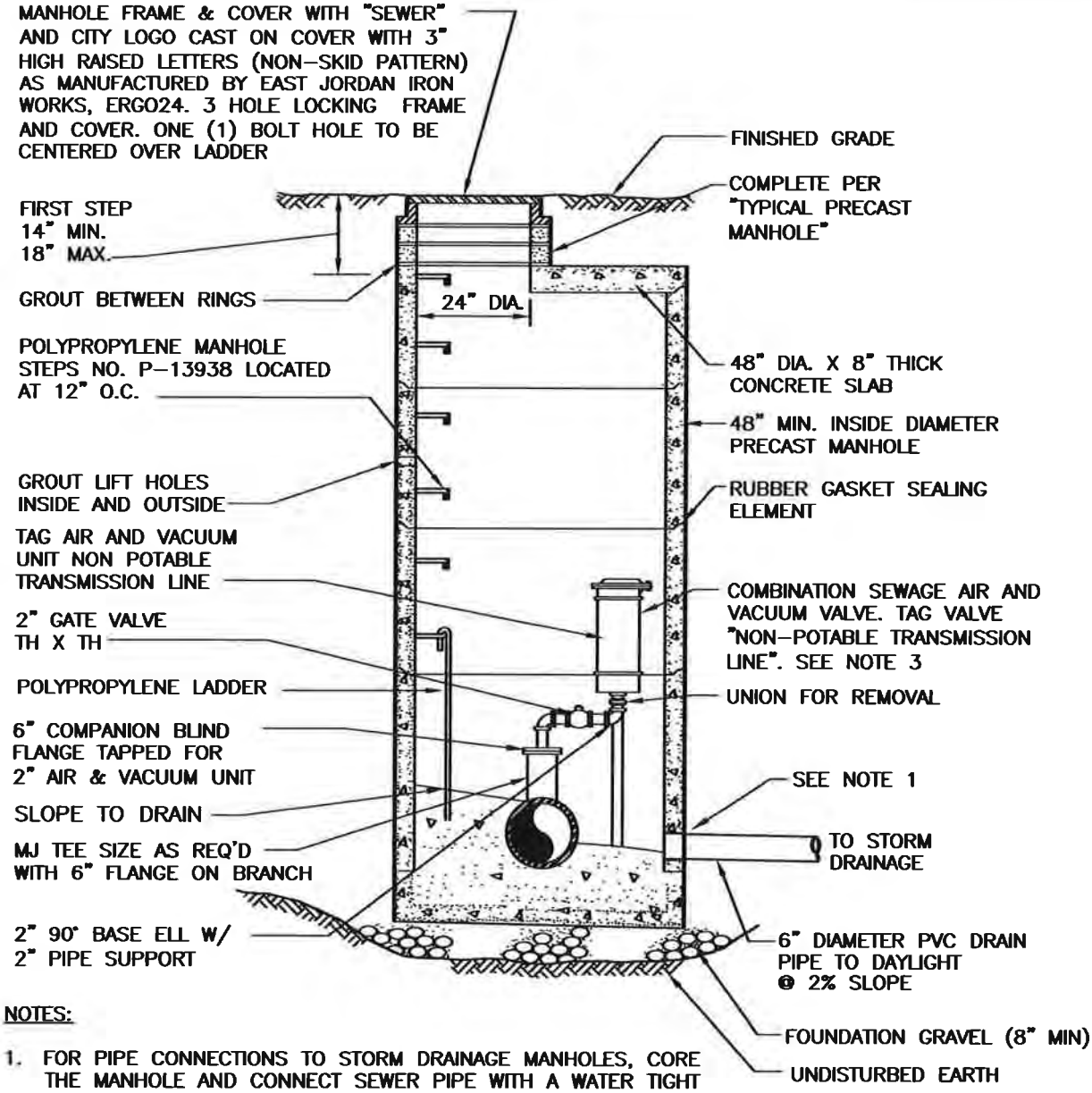


NOTES:

1. FOR PIPE CONNECTIONS TO STORM DRAINAGE MANHOLES, CORE THE MANHOLE AND CONNECT SEWER PIPE WITH A WATER TIGHT FLEXIBLE RUBBER BOOT IN MANHOLE WALL, KOR-N-SEAL BOOT OR EQUAL.

2. DROP OF GRADE THRU MANHOLE SHALL BE 0.10', UNLESS OTHERWISE APPROVED.

3. "APCO, CRISPIN OR VALMATIC" HEAVY-DUTY COMBINATION AIR AND VACUUM VALVE W/ STAINLESS STEEL INTERNALS & EPOXY COATING. SEATS SHALL BE SUPPLIED FOR THE FOLLOWING WORKING PRESSURES: 20 PSI, 20-150 PSI W/ FLUSHING ATTACHMENTS.

4. PROVIDE ADEQUATE VERTICAL CLEARANCE TO REMOVE VALVE COMPONENTS W/O DISASSEMBLY.

CITY OF GRANITE FALLS

VACUUM RELIEF ASSEMBLY

APPROVED: Warren W Perkins

DATE: 10/18/2016

DWG. NO. AVRA

L:\GrFalls\15484 PW Stds\Sewer Dt\AVRA.dwg, 10/18/2016 3:25 PM, RUSSELL HORITA

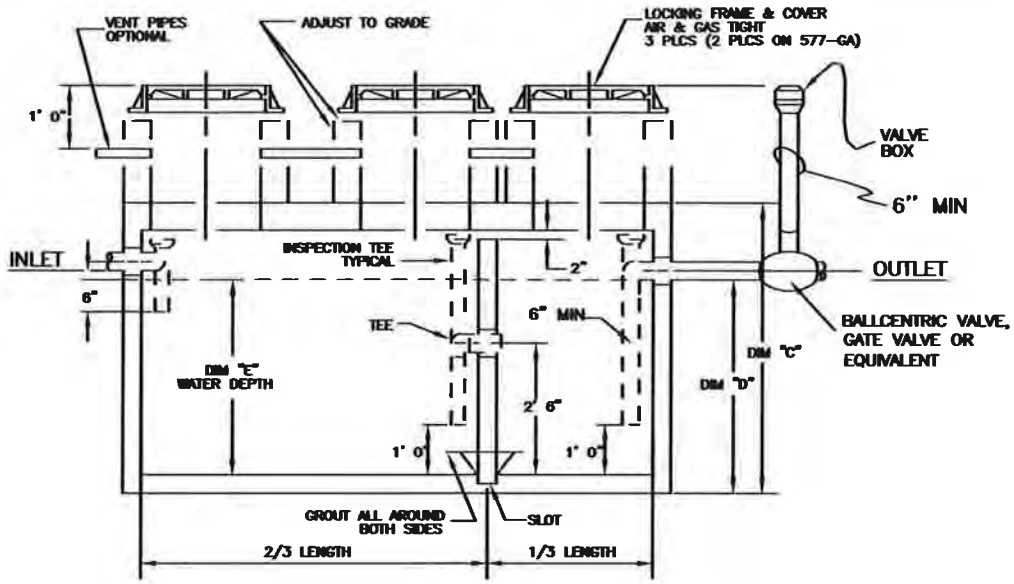


SECTION VIEW AA

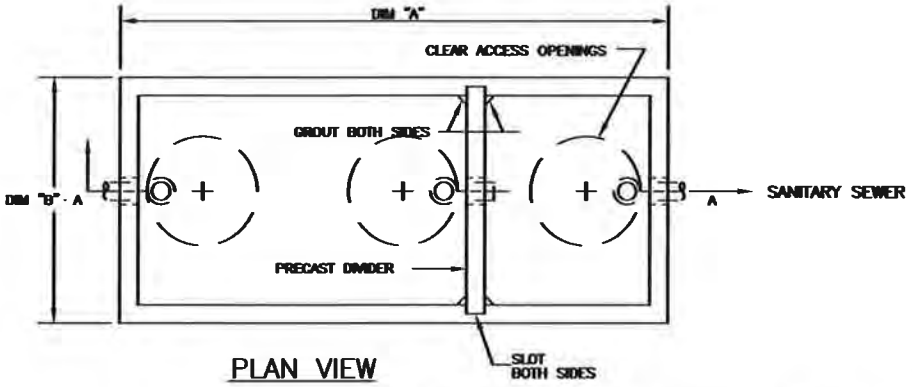


PLAN VIEW

**NOTES:**

1. CONCRETE: 28 DAY COMPRESSIVE STRENGTH fc = 4500 psi
2. REBAR: ASTM A-615 GRADE 60
3. MESH: ASTM A-185 GRADE 65
4. DESIGN: ACI-318-83 BUILDING CODE ASTM C-857 "MINIMUM STRUCTURAL DESIGN LOADING FOR UNGERGROUND PRECAST CONCRETE UTILITY STRUCTURES"

| DIM "A" | DIM "B" | DIM "C" | DIM "D" | WATER DEPTH DIM "E" |
|---|---|---|---|---|
| 7'-0" | 4'-8" | 7'-0" | 3'-6" | 3'-2" |
| 7'-0" | 4'8" | 7'-0" | 4'-3" | 3'-11" |
| 7'-0" | 4'-8" | 7'-0" | 5'-3" | 4'-11" |
| 9'-0" | 5'-0" | 7'-2" | 4'-2" | 3'-10" |
| 9'-0" | 5'-0" | 7'-2" | 5'-2" | 4'-10" |
| 11'-2" | 5'-8" | 7'-2" | 4'-4" | 4'-0" |
| 11'-2" | 5'-8" | 7'-2" | 4'-11" | 4'-7" |
| 12'-8" | 6'-8" | 8'-0" | 4'-7" | 3'-10" |
| 12'-8" | 6'-8" | 8'-0" | 5'-6" | 4'-9" |
| 12'-8" | 6'-8" | 8'-0" | 6'-0" | 5'-3" |
| 15'-7" | 9'-7" | 8'-6.5" | 5'-0" | 3'-9" |
| 15'-7" | 9'-7" | 8'-6.5" | 6'-3" | 5'-0" |
| 19'-11" | 9'-11" | 8'-11" | 6'-2" | 4'-9" |
| 19'-11" | 9'-11" | 8'-11" | 7'-2" | 5'-9" |

# CITY OF GRANITE FALLS

GREASE INTERCEPTOR
(1 OF 2)

APPROVED: Warren W. Ruiz

DATE: 10/18/2016

DWG. NO.
GREA-INT

L:\GrFalls\15484 PW Stds\Sewer Dt\GREA-INT.dwg, 10/18/2016 3:26 PM, RUSSELL HORITA

NOTES FOR GREASE INTERCEPTORS

1. THE PLANS AND SPECIFICATIONS SHALL ILLUSTRATE PROPERTY BOUNDARIES, PIPING/ DRAINAGE DETAILS AND CONNECTIONS TO THE SANITARY SEWER. DETAIL AND ELEVATION DRAWINGS OF THE GREASE INTERCEPTOR SHALL INCLUDE UPC APPENDIX 'H' DESIGN CALCULATIONS TO SHOW CAPACITY, DETENTION TIME AND REMOVAL EFFICIENCIES.

   NO. OF MEALS/PEAK HOUR X WASTE FLOW RATE X RETENTION TIME X STORAGE FACTOR = CAPACITY IN GALLONS

2. EFFLUENT FROM GREASE INTERCEPTORS SHALL NOT EXCEED 100 mg/l FAT, OIL AND GREASE DISCHARGED TO THE SANITARY SEWER.

3. GREASE INTERCEPTORS INSTALLED IN PAVED AREAS SHALL COMPLY WITH H-20 LOADING.

4. THE GREASE INTERCEPTOR SHALL BE INSTALLED AND CONNECTED SUCH THAT IT SHALL BE EASILY ACCESSIBLE FOR INSPECTION, CLEANING AND REMOVAL AT ALL TIMES. NO SANITARY WASTEWATER SHALL BE CONVEYED TO THE SEPARATOR. A SEPARATE SIDE SEWER SHALL BE REQUIRED TO CARRY SANITARY WASTEWATER TO THE SEWER MAIN. IT SHALL BE PLACED AS CLOSE TO THE SERVICE AREA AS PRACTICAL. MANHOLE COVERS SHALL BE GAS TIGHT AND HAVE A MINIMUM OPENING OF 20 INCHES IN DIAMETER.

5. PLUMBING/PIPING SHALL BE CONSTRUCTED TO ESTABLISH "PARALLEL FLOW" (90° TO THE TANK BAFFLE) THROUGH THE GREASE INTERCEPTOR. NO RADIUS, BEND OR ELBOW SHALL BE ALLOWED IN THE INLET PIPE, FOR A MINIMUM OF 10 FEET OR 20 PIPE DIAMETERS, WHICHEVER IS GREATER, UPSTREAM OF THE INTERCEPTOR.

6. VENTING OF THE INTERCEPTOR SHALL BE IN ACCORDANCE WITH CHAPTER 4, 5 AND 7 OF THE UNIFORM PLUMBING CODE-1988 OR AS ADOPTED BY THE CITY OF PUYALLUP.

7. A BALLCENTRIC VALVE OR GATE VALVE SHALL BE LOCATED IN THE DISCHARGE PIPING, A MAXIMUM OF 10 FEET FROM THE GREASE INTERCEPTOR. THIS VALVE SHALL BE CLOSED WHEN CLEANING OR SERVICING THE DEVICE. ANY PUMP MECHANISM SHALL BE INSTALLED DOWNSTREAM OF THE INTERCEPTOR TO PREVENT FAT, OIL AND GREASE EMULSIFICATION. A 'TEE' CONNECTION SHALL BE INSTALLED IN THE DISCHARGE PIPING TO PROVIDE FOR SAMPLE COLLECTION.

8. ALL GREASE INTERCEPTORS SHALL BE FILLED WITH CLEAN WATER BEFORE USE.

9. THE DESIGN ENGINEER SHALL PROVIDE THE CITY ENGINEER OR HIS REPRESENTATIVE WITH A LETTER OF INSPECTION CERTIFYING THAT THE INSTALLATION WAS PERFORMED IN ACCORDANCE WITH ALL REGULATIONS AND THE APPROVED PLAN.

10. FINAL INSPECTION IS REQUIRED BY THE CITY ENGINEER OR HIS REPRESENTATIVE PRIOR TO CONNECTION TO THE SANITARY SEWER.

11. THE PROPERTY OWNER SHALL RETAIN OWNERSHIP OF THE GREASE INTERCEPTOR AND SIDE SEWER LINES AND SHALL BE RESPONSIBLE FOR THEIR OPERATION AND MAINTENANCE. A SERVICE/MAINTENANCE RECORD SHALL BE KEPT ON THE PREMISES AT ALL TIMES AND SHALL BE IMMEDIATELY AVALABLE TO THE CITY ENGINEER OR HIS REPRESENTATIVE UPON REQUEST.

12 THE PROPERTY OWNER SHALL REPORT IMMEDIATELY TO THE CITY ENGINEER OR HIS REPRESENTATIVE, ANY SPILL, SURCHARGE, BYPASS OR MECHANICAL FAULT OR FAILURE WHICH INTERRUPTS OR OTHERWISE REDUCES THE CAPACITY OR REMOVAL EFFICEINCY OF THE GREASE INTERCEPTOR.

| | |
|---|---|
| CITY OF GRANITE FALLS<br>GREASE INTERCEPTOR<br>(2 OF 2) | |
| APPROVED: Warren W Parker<br>DATE: 10/18/2016 | DWG. NO.<br>GREA-INT |

L:\GrFalls\15484 PW Stds\Sewer Dtl\GREA-INT.dwg, 10/18/2016 3:26 PM, RUSSELL HORITA

# WATER DETAILS

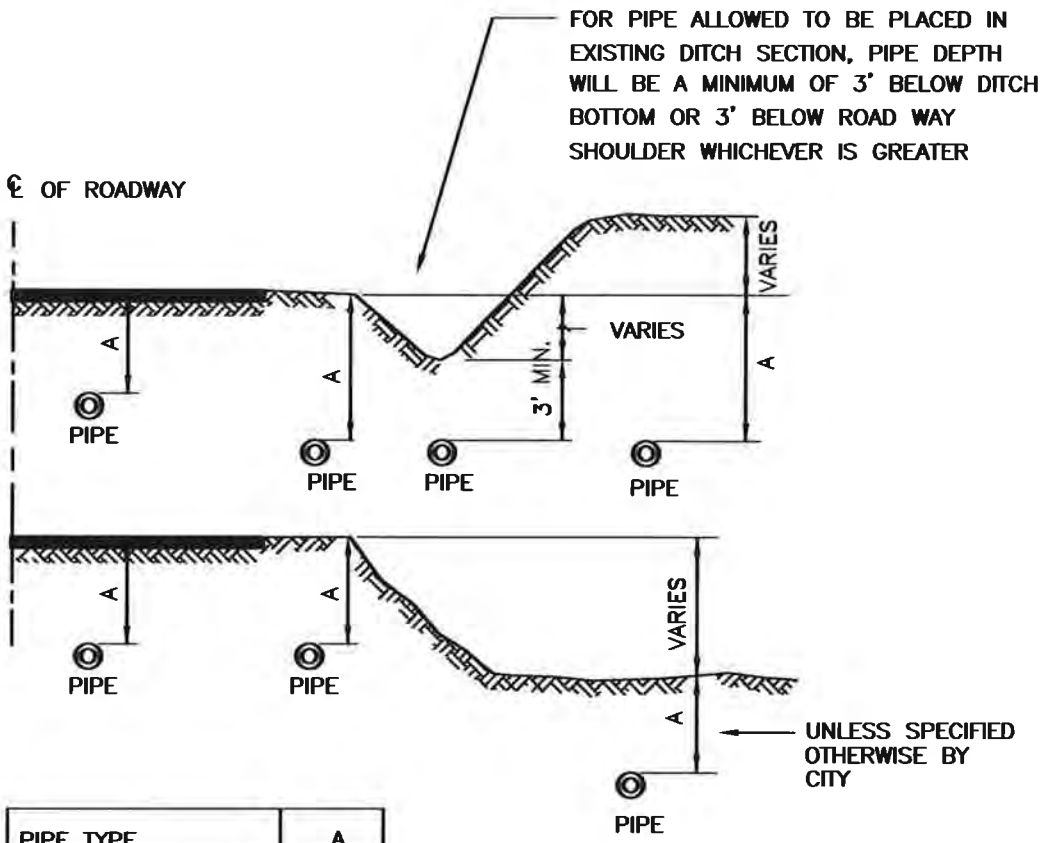


| PIPE TYPE | A |
|---|---|
| TRANSMISSION | 42" |
| DISTRIBUITION | 36" |

* MINIMUM DEPTH

# CITY OF GRANITE FALLS

## WATER MAIN DEPTH REQUIREMENTS

APPROVED: Warren W Perkins

DATE: 10/18/2016

DWG. NO. WA-MAIN

L:\GrFalls\15484 PW Stds\Water Dtl\WA-MAIN.dwg, 10/18/2016 3:59 PM, RUSSELL HORITA

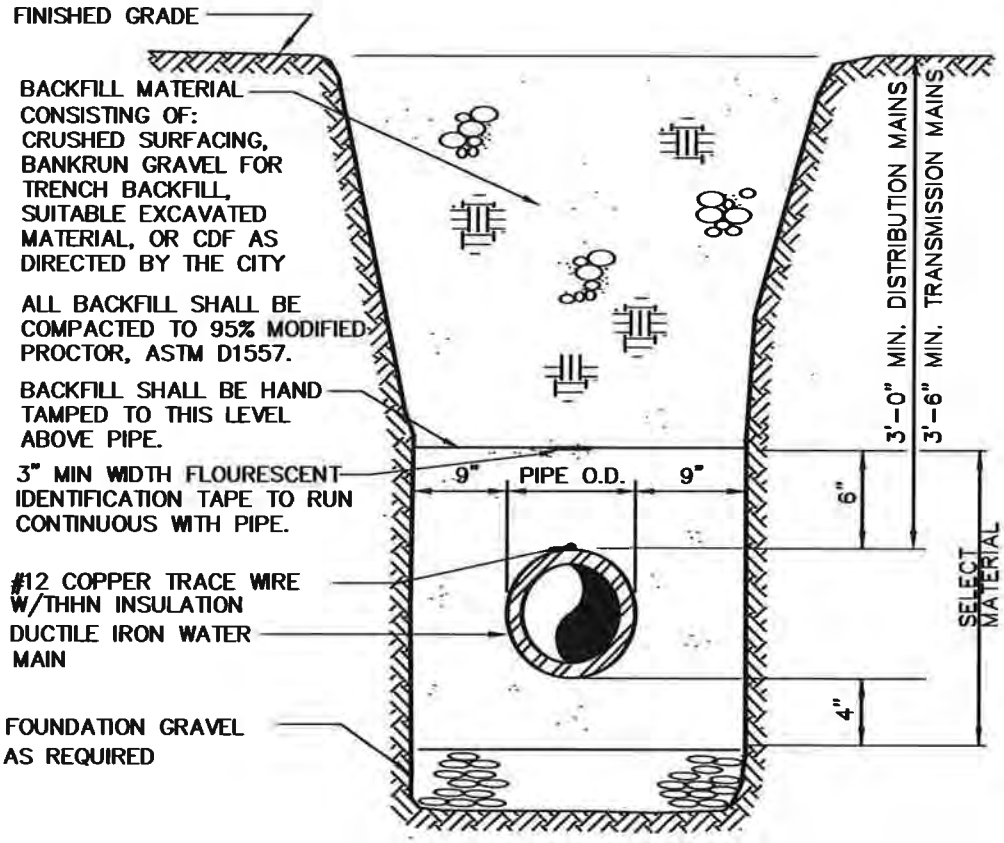


NOTE:

BACKFILL MATERIAL AND COMPACTION SHALL BE IN CONFORMANCE WITH THE CITY'S STANDARDS AND/OR STATE OR COUNTY PERMIT REQUIREMENTS.

SELECT MATERIAL SHALL BE CRUSHED SURFACING OR GRAVEL BACKFILL FOR PIPE ZONE BEDDING.

CITY OF GRANITE FALLS

TRENCH SECTION FOR RIGID PIPE

APPROVED: Warren N. Perkins

DATE: 10/18/2016

DWG. NO. WA-MAIN2

L:\GrFalls\15484 PW Stds\Water Dtl\WA-MAIN2.dwg, 10/18/2016 3:59 PM, RUSSELL HORITA

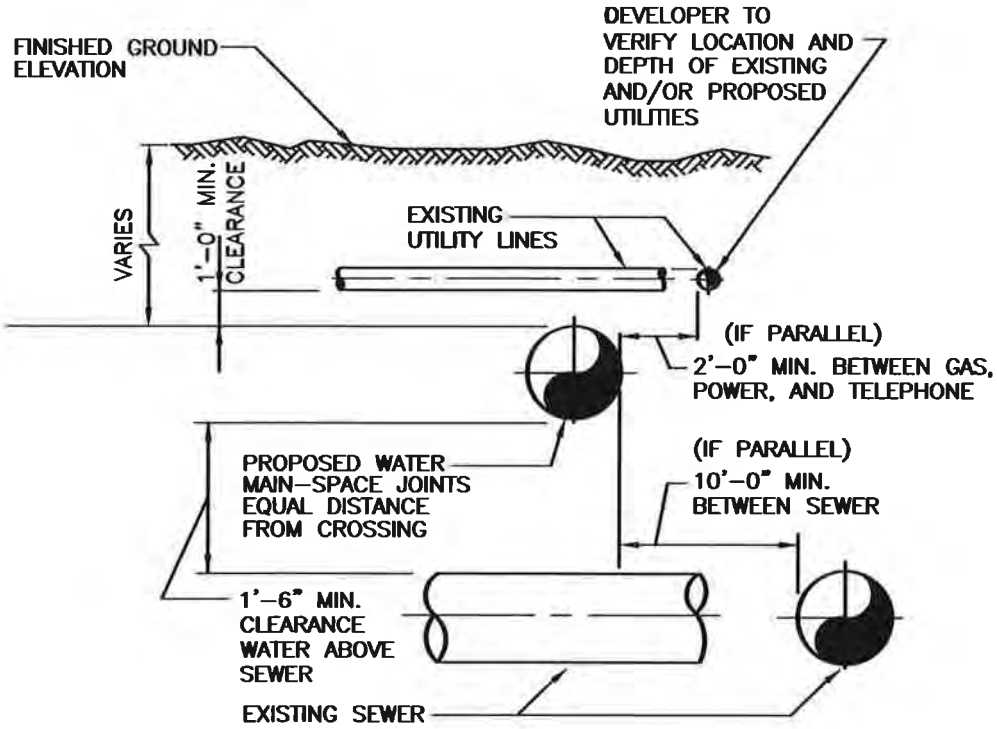


**NOTES:**

1. CDF ENCASEMENT SHALL BE UTILIZED, IF APPROVED BY THE CITY, AT LOCALIZED UTILITY CROSSING IF MINIMUM PIPE SEPARATION (ELEVATION) CANNOT BE MAINTAINED OR ACHIEVED.

| | | |
|---|---|---|
| CITY OF GRANITE FALLS<br>MINIMUM UTILITY SPACING | | |
| APPROVED: Warren M. Perkins | | DWG. NO. |
| DATE: 10/18/2016 | | TYP-UTIL |

L:\GrFalls\15484 PW Stds\Water Dtl\TYP-UTIL.dwg, 10/18/2016 3:58 PM, RUSSELL HORITA

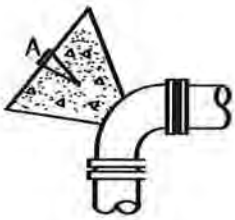


90 BEND

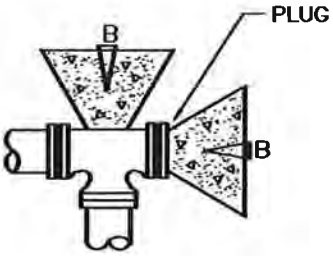


TEE

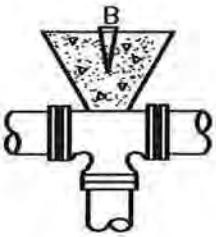


TEE

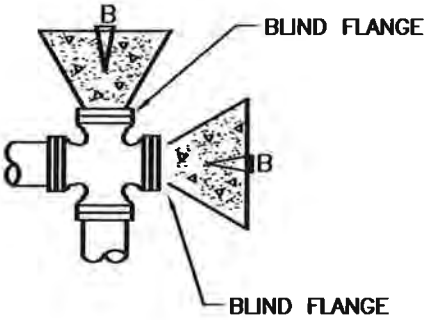


CAPPED CROSS

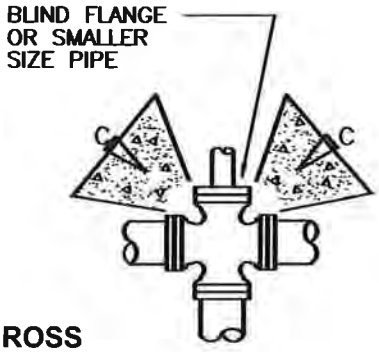


CROSS

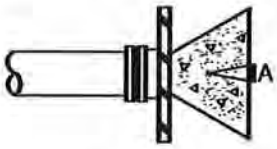


CAP

45 BEND

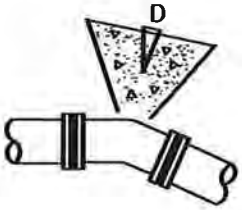


22 1/2 BEND

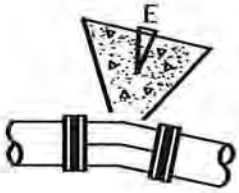


11 1/4 BEND

CITY OF GRANITE FALLS

THRUST BLOCK DETAIL (1 OF 2)

APPROVED: Warren W Perkins

DATE: 10/18/2016

DWG. NO.
THRU-BLO2

L:\GrFalls\15484 PW Stds\Water Dtl\THRU-BLO2.dwg, 10/18/2016 3:58 PM, RUSSELL HORITA

# THRUST BLOCK – TABLE
## MIN. BEARING AREA AGAINST UNDISTURBED SOIL
## SQUARE FEET

| PIPE SIZE | A($FT^2$) | B($FT^2$) | C($FT^2$) | D($FT^2$) | E($FT^2$) |
|---|---|---|---|---|---|
| 4" | 3 | 1 | 1 | 1 | 1 |
| 6" | 4 | 4 | 2 | 1 | 1 |
| 8" | 7 | 6 | 4 | 2 | 1 |
| 10" | 11 | 10 | 6 | 3 | 2 |
| 12' | 16 | 14 | 9 | 5 | 3 |
| 14" | 22 | 19 | 12 | 6 | 3 |
| 16" | 29 | 25 | 16 | 8 | 4 |
| 18" | 36 | 31 | 20 | 10 | 5 |

NOTES:

1. BEARING AREA OF CONCRETE THRUST–BLOCK BASED ON 200 PSI PRESSURE AND SAFE SOIL BEARING LOAD OF 2,000 POUNDS PER SQUARE FOOT.
2. AREAS MUST BE ADJUSTED FOR OTHER PIPE SIZES, PRESSURES AND SOIL CONDITIONS.
3. CONCRETE BLOCKING SHALL BE CAST IN PLACE AND HAVE A MINIMUM OF 1/4 SQUARE FOOT BEARING AGAINST THE FITTING. WRAP ALL FITTINGS IN 6 MIL PLASTIC PRIOR TO POURING BLOCK. NO CONCRETE SHALL BE PLACED NEAR BOLTS.
4. BLOCK SHALL BEAR AGAINST FITTINGS ONLY AND SHALL BE CLEAR OF JOINTS TO PERMIT TAKING UP OR DISMANTLING OF JOINT.
5. CONTRACTOR SHALL INSTALL BLOCKING ADEQUATE TO WITHSTAND FULL TEST PRESSURE AS WELL AS CONTINUOUSLY WITHSTAND OPERATING PRESSURE UNDER ALL CONDITIONS OF SERVICE.

CITY OF GRANITE FALLS

THRUST BLOCK DETAIL (2 OF 2)

APPROVED: Warren W Perkins

DATE: 10/18/2016

DWG. NO. THRU-BLO2

L:\GrFalls\15484 PW Stds\Water Dtl\THRU-BLO2.dwg, 10/18/2016 3:58 PM, RUSSELL HORITA

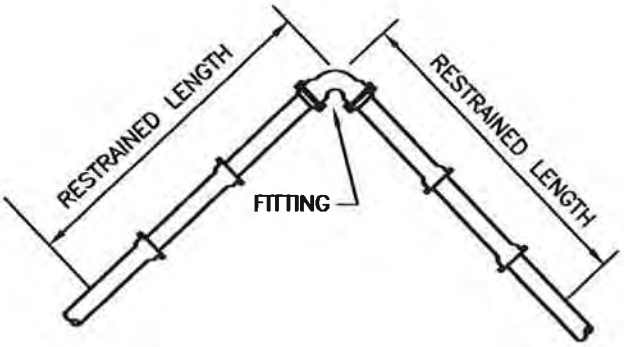


| PIPE SIZE | 90° BEND | 45° BEND | 22 1/2° BEND | 11 1/4° BEND | TEE OR DEAD END CAP |
|---|---|---|---|---|---|
| | RESTRAINED LENGTH IN FEET | | | | |
| 4" | 40 | 17 | 8 | 4 | 30 |
| 6" | 55 | 23 | 11 | 6 | 39 |
| 8" | 73 | 31 | 15 | 8 | 53 |
| 10" | 88 | 37 | 18 | 9 | 67 |
| 12" | 103 | 43 | 21 | 10 | 82 |
| 16" | 133 | 55 | 27 | 13 | 110 |
| 18" | 145 | 60 | 29 | 15 | 124 |

**NOTES:**

① RESTRAINED LENGTHS SHOWN ARE MINIMUM AND FOR LINEAL FEET REQUIRED ON EACH SIDE OF FITTING INDICATED.

② FOOTAGES ARE BASED ON 250 PSI PRESSURE AND 42 INCHES COVER. IF PRESSURE IS GREATER OR COVER IS LESS, THE RESTRAINED LENGTH SHALL BE INCREASED ACCORDINGLY

CITY OF GRANITE FALLS

THRUST RESTRAINT FOR DUCTILE IRON PIPE

APPROVED: Warren W Perkins

DATE: 10/18/2016

DWG. NO. DUCT-PIP

L:\GrFalls\15484 PW Stds\Water Dtl\DUCT-PIP.dwg, 10/18/2016 3:54 PM, RUSSELL HORITA

| TYPE "A" BLOCKING FOR 11 1/4°–22 1/2°–30° VERTICAL BENDS | | | | | | |
|---|---|---|---|---|---|---|
| | | VB | | S | D | L |
| PIPE SIZE NOMINAL DIAMETER– INCHES | TEST PRESSURE PSI | VERTICAL BEND DEGREES | No. OF CU. FT. OF CONC. BLOCKING | SIDE OF CUBE LIN. FT. | DIAM. OF SHACKLE RODS (2) INCHES | DEPTH OF RODS IN CONCRETE LIN. FT. |
| 4" | 300 | 11 1/4 | 8 | 2 | 5/8" | 1.5 |
| | | 22 1/2 | 11 | 2.2 | | 2.0 |
| | | 30 | 17 | 2.6 | | |
| 6" | 300 | 11 1/4 | 11 | 2.2 | 5/8" | 2.0 |
| | | 22 1/2 | 25 | 2.9 | | |
| | | 30 | 41 | 3.5 | | |
| 8" | 300 | 11 1/4 | 16 | 2.5 | 5/8" | 2.0 |
| | | 22 1/2 | 47 | 3.6 | | |
| | | 30 | 70 | 4.1 | 3/4" | 2.5 |
| 12" | 250 | 11 1/4 | 32 | 3.2 | 5/8" | 2.0 |
| | | 22 1/2 | 88 | 4.5 | 7/8" | 3.0 |
| | | 30 | 132 | 5.1 | | |
| 16" | 225 | 11 1/4 | 70 | 4.1 | 7/8" | 3.0 |
| | | 22 1/2 | 184 | 5.7 | 1 1/8" | 4.0 |
| | | 30 | 275 | 6.5 | 1 1/4" | |
| 20" | 200 | 11 1/4 | 91 | 4.5 | 7/8" | 3.0 |
| | | 22 1/2 | 225 | 6.1 | 1 1/4" | 4.0 |
| | | 30 | 330 | 6.9 | 1 3/8" | 4.5 |
| 24" | 200 | 11 1/4 | 128 | 5.0 | 1" | 3.5 |
| | | 22 1/2 | 320 | 6.8 | 1 3/8" | 4.5 |
| | | 30 | 480 | 7.9 | 1 7/8" | 5.5 |

| TYPE "B" BLOCKING FOR – 45° VERTICAL BENDS | | | | | | |
|---|---|---|---|---|---|---|
| | | VB | | S | D | L |
| 4" | 300 | 45 | 30 | 3.1 | 5/8" | 2.0 |
| 6" | | | 68 | 4.1 | | |
| 8" | | | 123 | 5.0 | | |
| 12" | 250 | | 232 | 6.1 | 3/4" | 2.5 |
| 16" | 225 | | 478 | 7.8 | 1 1/8" | 4.0 |
| 20" | 200 | | 560 | 8.2 | 1 1/4" | |
| 24" | | | 820 | 9.4 | 1 3/8" | 4.5 |

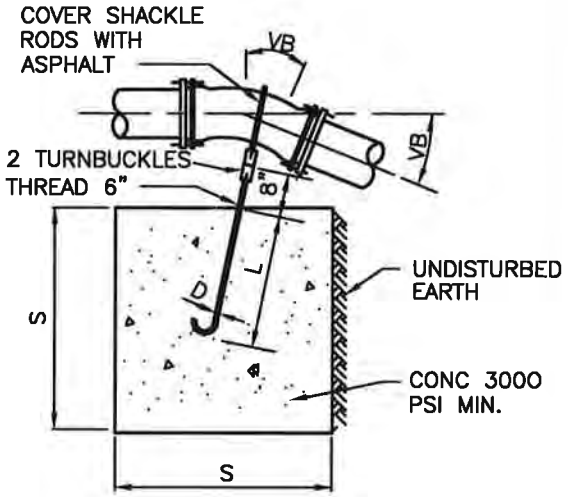


TYPE "A" BLOCKING

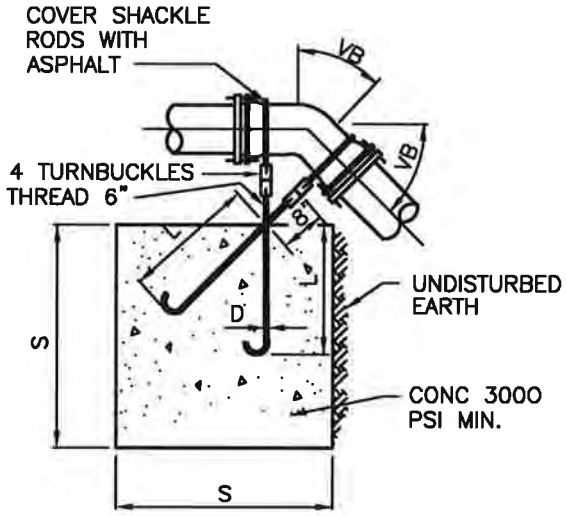


TYPE "B" BLOCKING

THIS TABLE REPRESENTS THE "MINIMUM" CONSTRUCTION STANDARD. APPROPRIATELY SIZED ANCHOR BLOCKS BASED ON EXISTING AND LOCAL CONDITIONS ARE REQUIRED

# CITY OF GRANITE FALLS

VERTICAL ANCHOR BLOCK

APPROVED: Warren W Perkins

DATE: 10/18/2016

DWG. NO. ANCH-BLO

L:\GrFalls\15484 PW Stds\Water Dtl\ANCH-BLO.dwg, 11/10/2016 11:11 AM, WARREN PERKINS

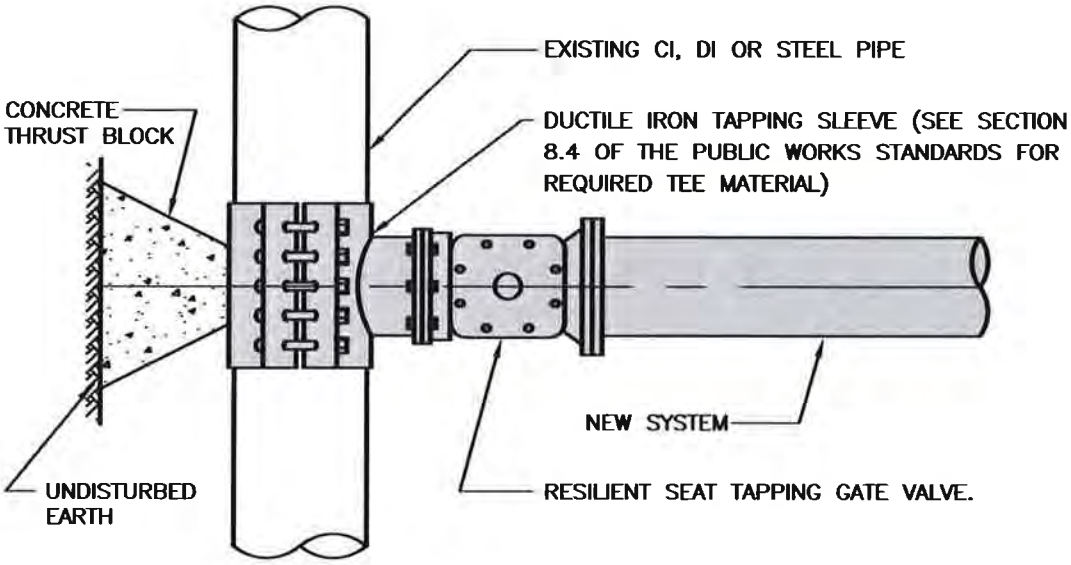


# CITY OF GRANITE FALLS

WET OR HOT TAP CONNECTION

APPROVED: Warren H Perkins

DATE: 10/18/2016

DWG. NO. TAP-CONN

L:\GrFalls\154B4 PW Stds\Water Dtl\TAP-CONN.dwg, 10/18/2016 3:57 PM, RUSSELL HORTA

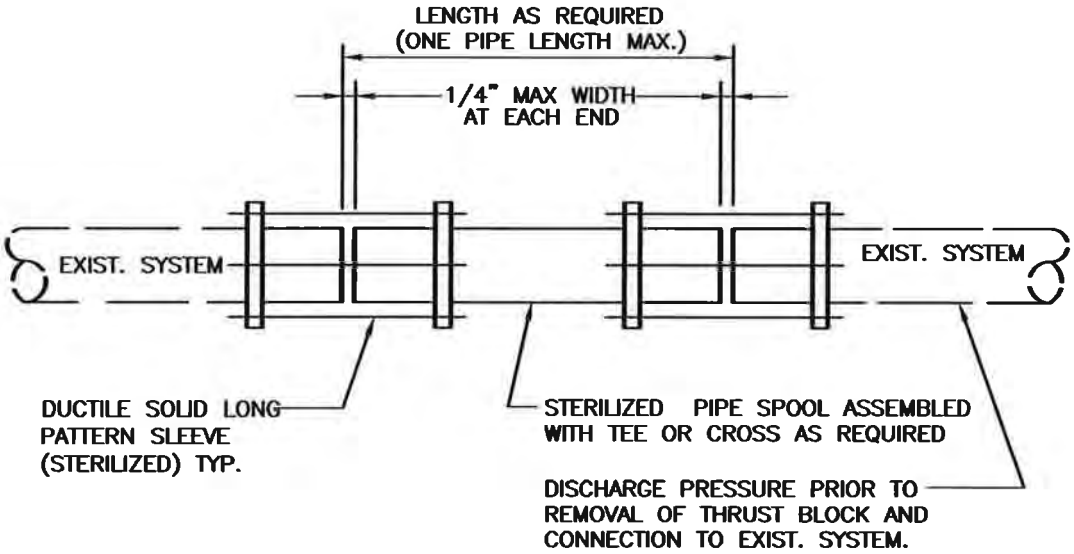


NOTE:

1. NO DEFLECTION SHALL BE ALLOWED AT EITHER COUPLING.
2. CUT–IN CONNECTIONS ON NON–DI PIPE SHALL USE EXTENDED RANGE COUPLING (ROMAC XR501 OR EQUAL).
3. IN–LINE VALVE(S) IN EXISTING SYSTEM MAY BE REQUIRED AT THE SOLE DISCRETION OF THE CITY AT ALL NEW INTERTIE LOCATIONS. (NOTE: VALVE(S) ARE NOT SHOWN ABOVE FOR CLARITY)

| | | |
|---|---|---|
| CITY OF GRANITE FALLS<br>CUT IN CONNECTION | | |
| APPROVED: Warren W Perkins<br>DATE: 10/18/2016 | | DWG. NO.<br>CUT-CONN |

L:\GrFalls\15484 PW Stds\Water Dtl\CUT-CONN.dwg, 10/18/2016 3:53 PM, RUSSELL HORITA

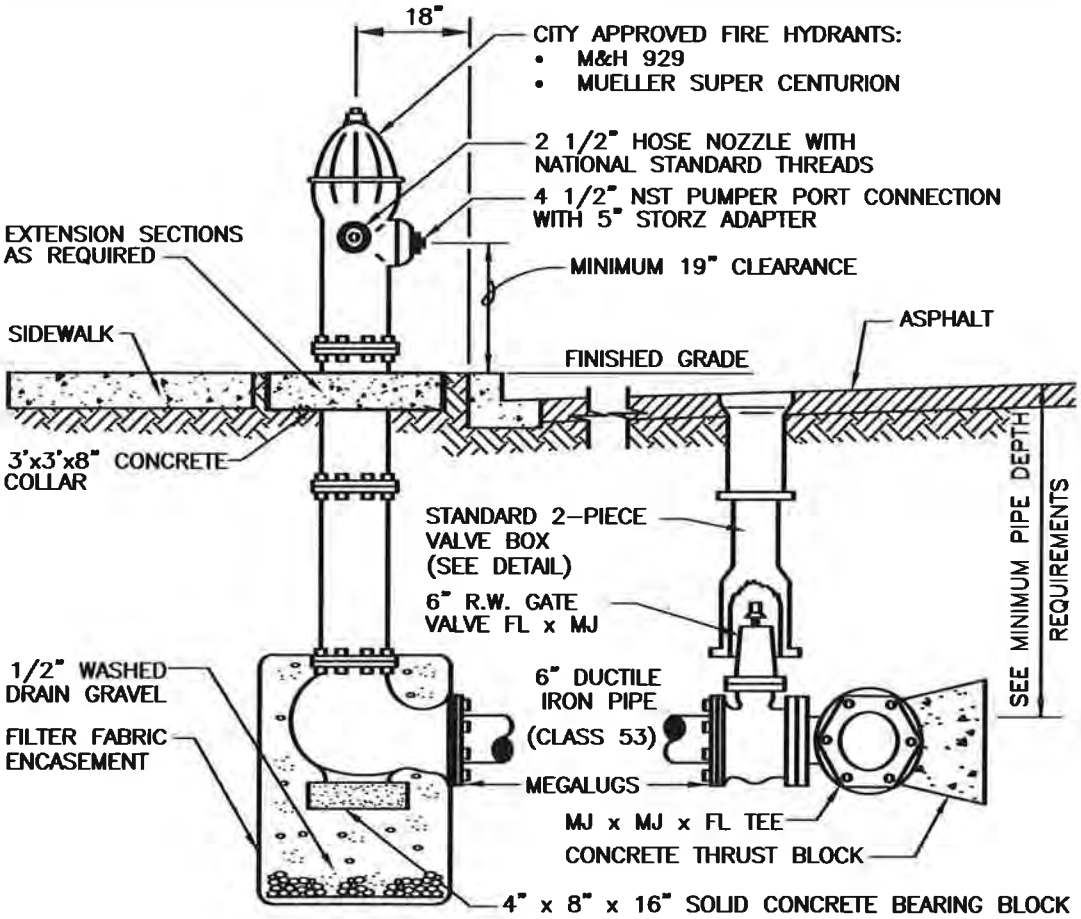


NOTES:

1. FIRE HYDRANTS TO BE PAINTED AS FOLLOWS:
   A. IF IN CITY: RUSTOLEUM SAFETY YELLOW BASE No. 288-14, COLOR CODE AX-6732, T-4432
   B. IF IN COUNTY: APPLY SNOHOMISH COUNTY P.U.D. REQUIREMENTS
2. INSTALL BLUE LANE REFLECTOR IN PAVEMENT.
3. STANDARD 4 1/2" NST PUMPER PORT CAP SUPPLIED WITH HYDRANT SHALL BE SALVAGED FOR CITY USE.

CITY OF GRANITE FALLS

FIRE HYDRANT IN PLANTER STRIP (CURB, GUTTER, SIDEWALK)

APPROVED: Warren W Perkins

DATE: 10/18/2016

DWG. NO. FIRE-HYD2

L:\GrFalls\15484 PW Stds\Water Dtl\Fire-Hyd2.dwg, 10/18/2016 3:55 PM, RUSSELL HORITA

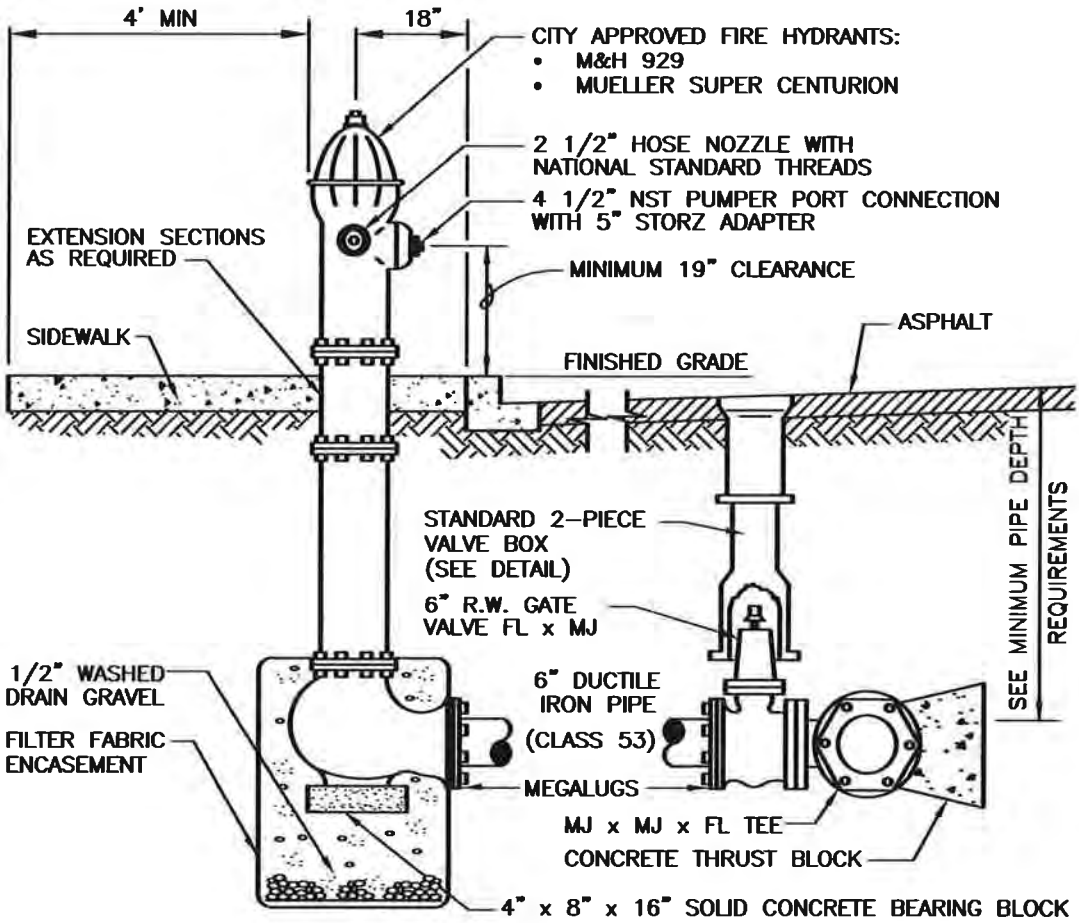


NOTES:

1. FIRE HYDRANTS TO BE PAINTED WITH RUSTOLEUM ENAMEL SAFETY YELLOW.
2. INSTALL BLUE LANE REFLECTOR IN PAVEMNT.

| | |
|---|---|
| CITY OF GRANITE FALLS<br>FIRE HYDRANT IN SIDEWALK<br>(CURB, GUTTER, SIDEWALK) | |
| APPROVED: Warren R Parks<br>DATE: 10/18/2016 | DWG. NO.<br>FIRE-HYD2 |

L:\GrFalls\15484 PW Stds\Water Dt\Fire-Hyd2.dwg, 10/18/2016 3:55 PM, RUSSELL HORITA

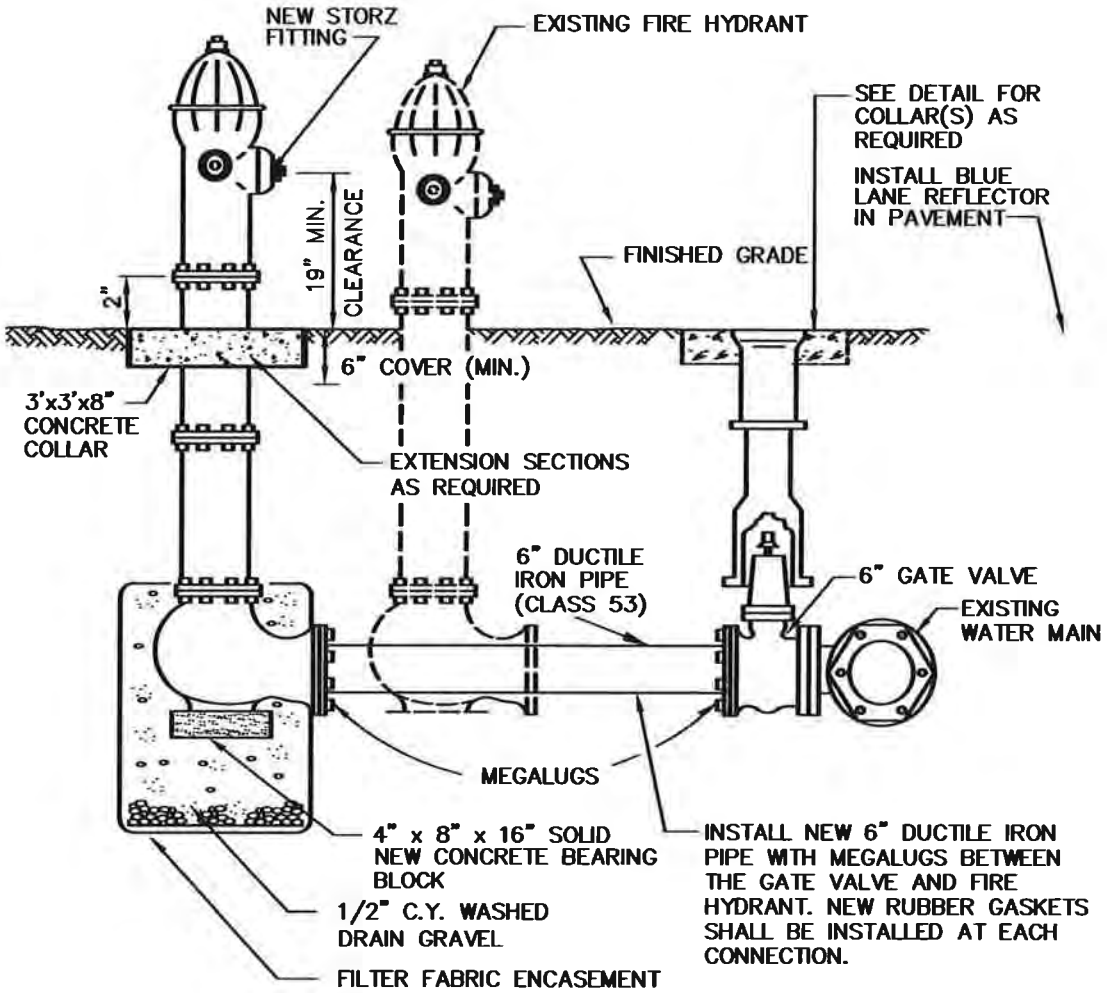


**NOTES :**

1. ALL RELOCATED 4 1/2" PUMPER PORTS ON FIRE HYDRANTS SHALL BE FITTED WITH 5" STORZ ADAPTOR.
2. PROVIDE MIN. 3' – 0" CLEARANCE AND LEVEL AREA AROUND RELOCATED HYDRANT.

| | | |
|---|---|---|
| | CITY OF GRANITE FALLS<br>FIRE HYDRANT RELOCATION | |
| APPROVED: Warren W Perkins<br>DATE: 10/18/2016 | | DWG. NO.<br>FIRE-HYD3 |

L:\GrFalls\15484 PW Stds\Water Dtl\Fire-Hyd3.dwg, 10/18/2016 3:55 PM, RUSSELL HORITA

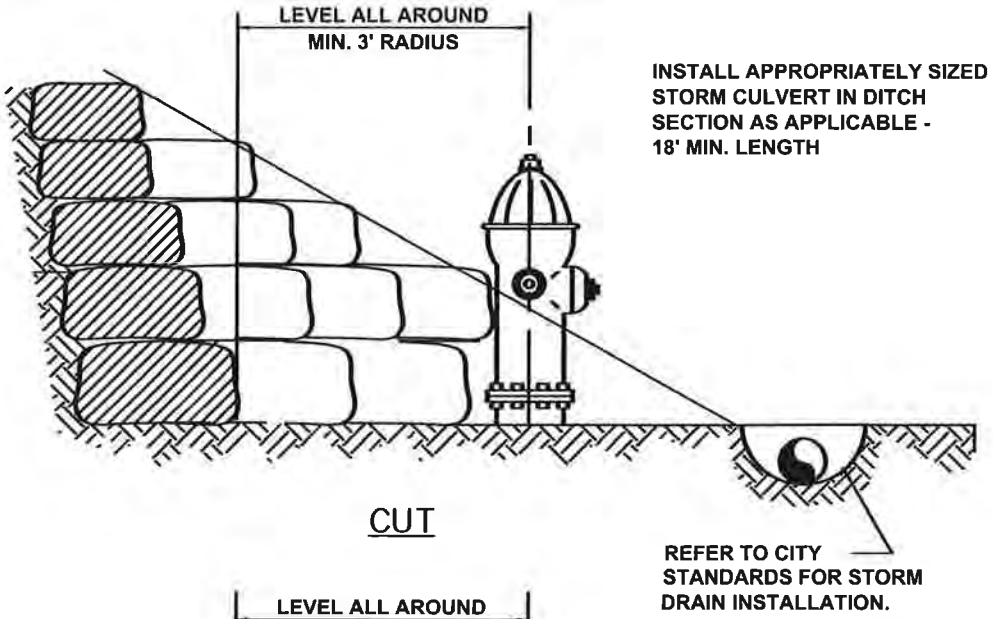


CUT

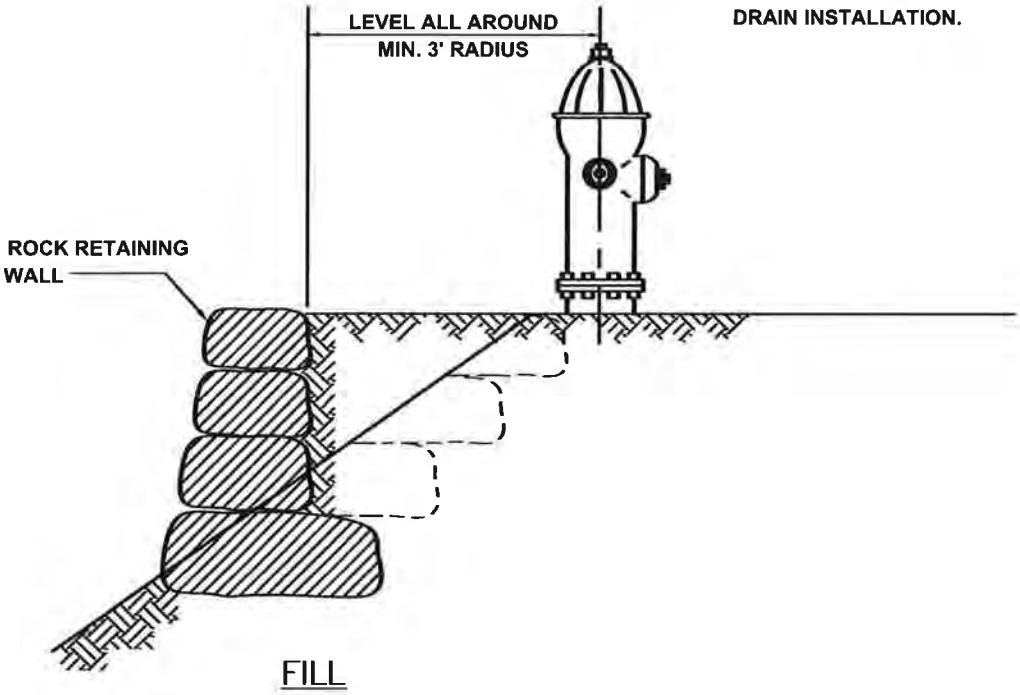


FILL

# CITY OF GRANITE FALLS

FIRE HYDRANT IN CUT OR FILL

APPROVED: Warren W Perkins

DATE: 10/18/2016

DWG. NO. FIRE-HYD4

L:\GrFalls\15484 PW Stds\Water Dtl\FIRE-HYD4.dwg, 10/18/2016 3:55 PM, RUSSELL HORITA

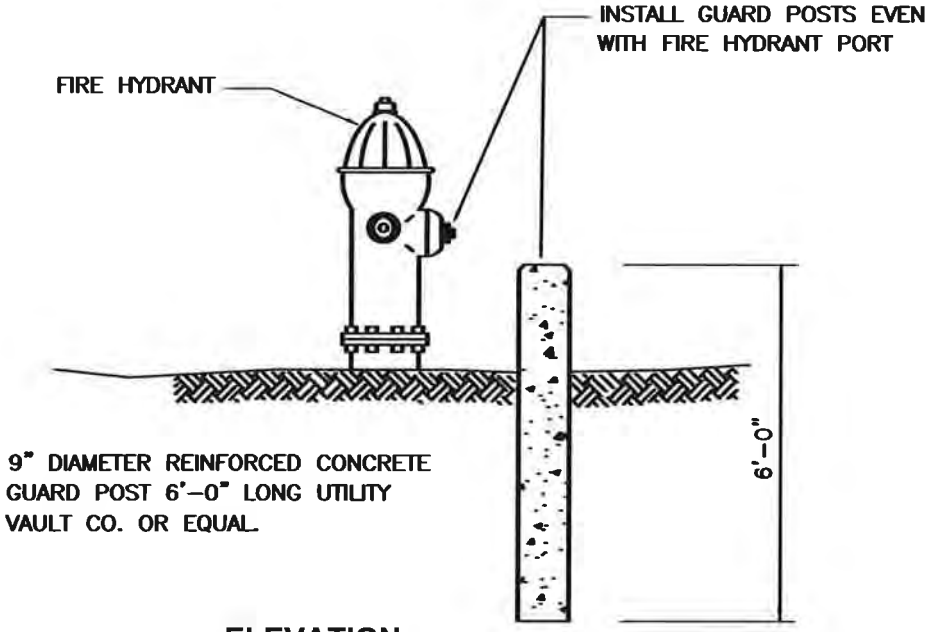


**ELEVATION**

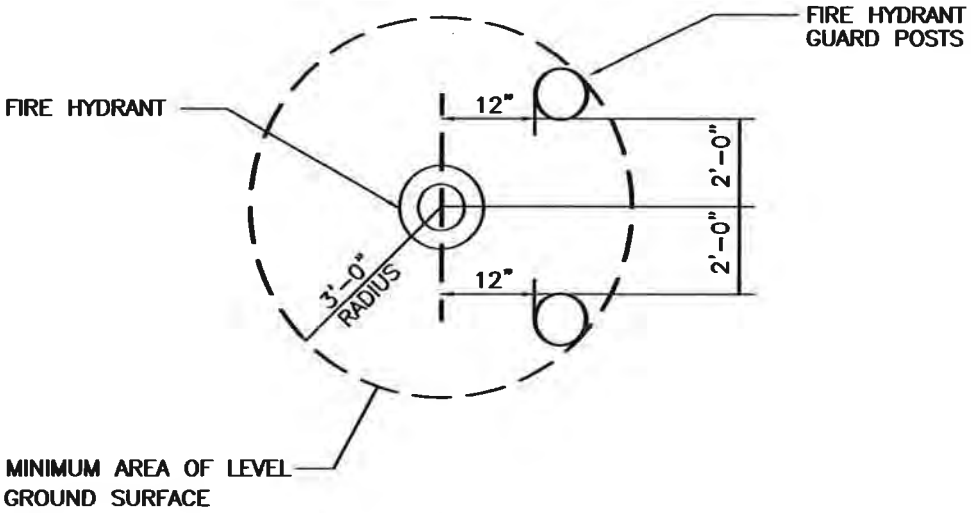


**PLAN**

# CITY OF GRANITE FALLS

FIRE HYDRANT GUARD POST INSTALLATION

APPROVED: Warren W Perkins

DATE: 10/18/2016

DWG. NO. FIRE-HYD5

L:\GrFalls\15484 PW Stds\Water Dtl\FIRE-HYD5.dwg, 10/18/2016 3:56 PM, RUSSELL HORITA

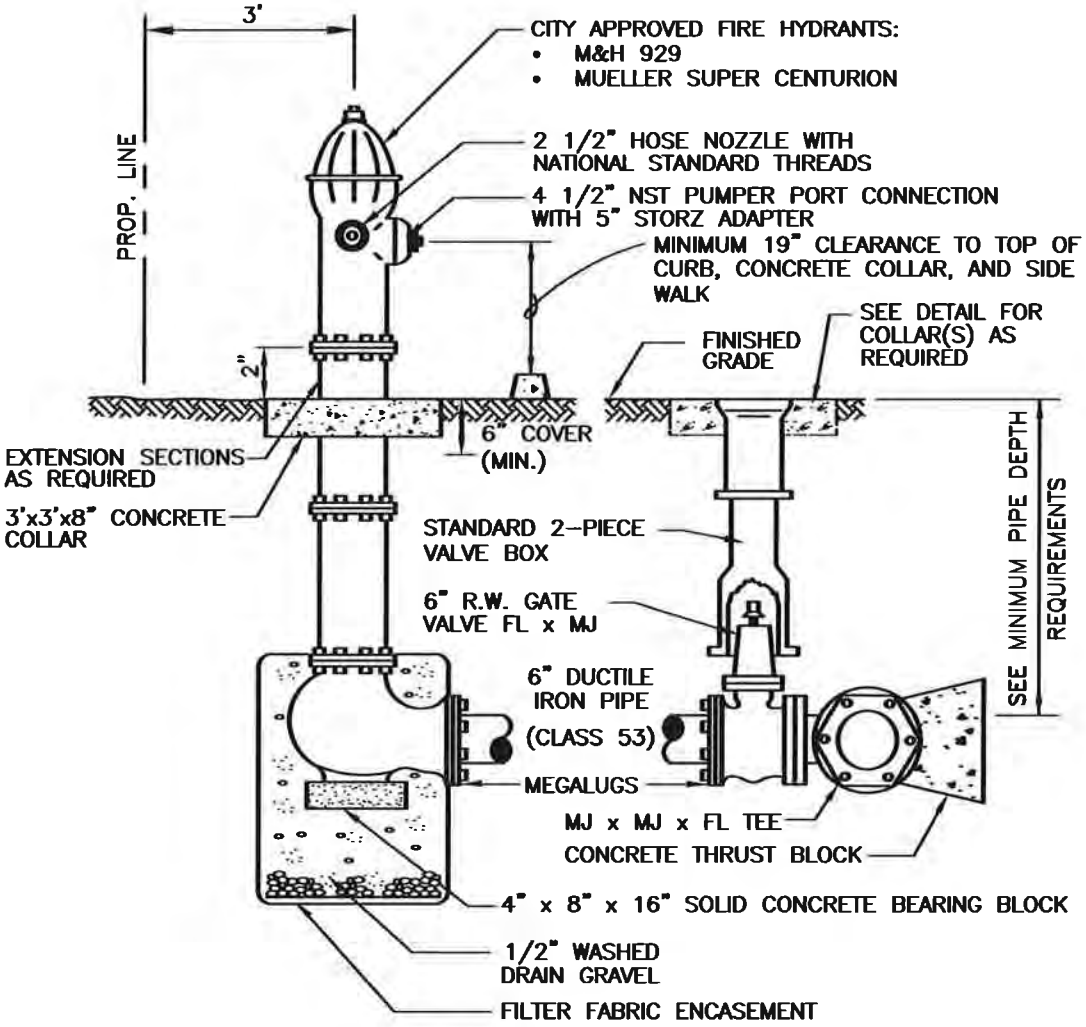


NOTES:

1. FIRE HYDRANTS TO BE PAINTED AS FOLLOWS:
   A. IF IN CITY: RUSTOLEUM SAFETY YELLOW BASE No. 288-14, COLOR CODE AX-6732, T-4432
   B. IF IN COUNTY: APPLY SNOHOMISH COUNTY P.U.D. REQUIREMENTS
2. INSTALL BLUE LANE REFLECTOR IN PAVEMENT.
3. STANDARD 4 1/2" NST PUMPER PORT CAP SUPPLIED WITH HYDRANT SHALL BE SALVAGED FOR CITY USE.

| | | |
|---|---|---|
| CITY OF GRANITE FALLS<br>FIRE HYDRANT INSTALLATION<br>(EXTRUDED CURB) | | |
| APPROVED: Warren W. Parks | | DWG. NO. |
| DATE: 10/18/2016 | | FIRE-HYD |

L:\GrFalls\15484 PW Stds\Water Dtl\Fire-Hyd.dwg, 10/18/2016 3:54 PM, RUSSELL HORITA

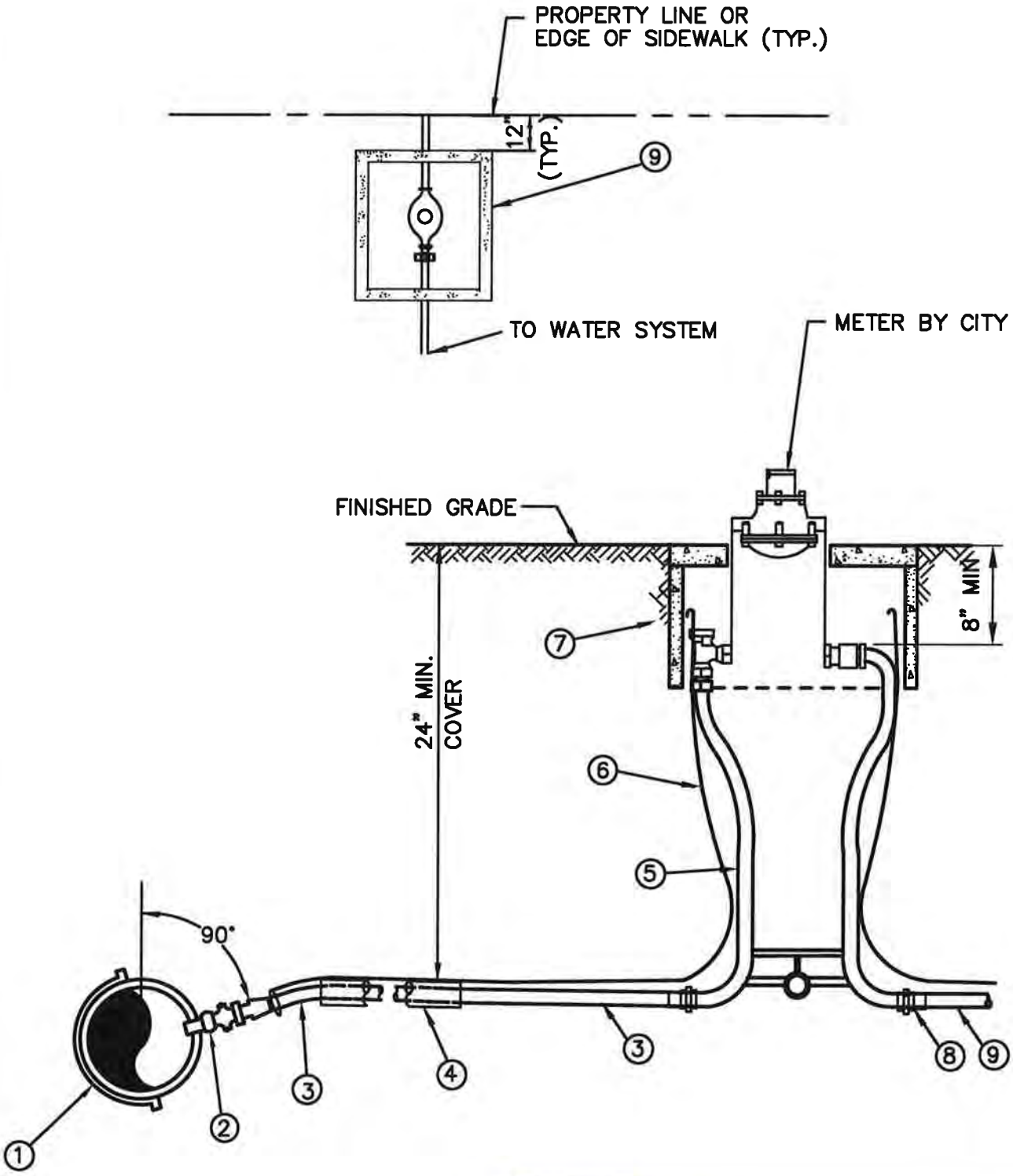


# CITY OF GRANITE FALLS

1" AND SMALLER WATER SERVICE
(1 OF 2)

APPROVED: Warren W Perkins

DATE: 10/30/17

DWG. NO.
1-WAT

PAGE 1 OF 2

\\GrFalls\15484 PW Stds\Water Ctl\1-WAT.dwg, 10/30/2017 11:44 AM, WARREN PERKINS

## LEGEND

1. ROMAC SADDLE SINGLE STRAP FOR PIPE DIAMETERS LESS THAN 8" AND DIRECT THREADED TAP FOR PIPE DIAMETERS 8" OR GREATER IF DUCTILE IRON PIPE CL 52, OTHERWISE DOUBLE SADDLE STRAP.
2. 1" MIP X PEP JOINT CORP STOP EQUAL TO FORD F1101 OR EQUAL
3. 1" HIGH MOLECULAR (200 PSI, SDR 7) IRON PIPE SIZE POLY PIPE (PEP)
4. INSTALL SERVICE LINE IN 2" PVC GUARD PIPE (SCH-80) WHEN CROSSING ROADWAY (3' MINIMUM BEYOND AND BENEATH PAVEMENT SECTION)
5. COPPER SETTER MUELLER B-2400 SERIES OR FORD 70 SERIES INCLUDING ANGLE BALL VALVE AND CHECK VALVE.
6. 10 GAUGE WIRE FROM MAINLINE TAP TO METER BOX AND EXPOSE 12" MINIMUM IN BOX (RUN INSIDE 2" PVC GUARD CONDUIT WHERE APPLICABLE)
7. METER BOX - 13"X24"X18" OLD CASTLE 1324BCF. METER LID - 13"X24" RECTANGULAR, H-20 LOADING OLD CASTLE DUCTILE IRON MAX VIEW COVER WITH AMR OPENING. (SET FLUSH WITH FINISHED GRADE)
8. PROVIDE APPROVED WATERTIGHT PLUG UNTIL CONNECTION TO PRIVATE SYSTEM IS MADE.
9. HIGH MOLECULAR (200 PSI, SDR 7) POLY PIPE (PEP) WITH COPPER TRACE WIRE TO BUILDING. EXPOSE 12" MINIMUM IN BOX.



CITY OF GRANITE FALLS

1" AND SMALLER WATER SERVICE (2 OF 2)

APPROVED: Warren W Perkins

DATE: 10/18/2016

DWG. NO. 1-WAT

E:\Grfdlls\15484 PW Stds\Water Dtl\1-WAT.dwg, 1/3/2017 11:33 AM, WARREN PERKINS

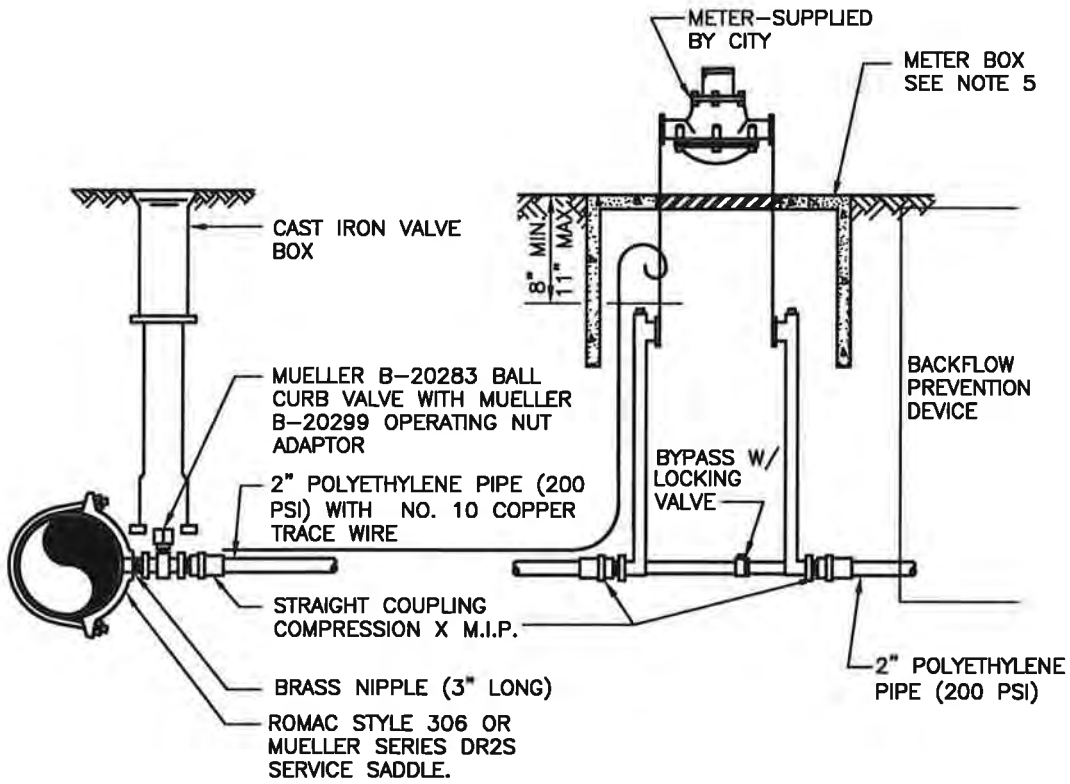


NOTES:

1. POLYETHYLENE PIPE SHALL HAVE NO. 10 COPPER TRACE WIRE WITH THHN BLUE PLASTIC INSULATION. WIRE SHALL BE OF SUFFICIENT LENGTH TO EXTEND 3 FEET ABOVE GROUND.
2. SERVICE FROM METER BOX TO STRUCTURE BY PROPERTY OWNER.
3. INDIVIDUAL SERVICES REQUIRED FOR EACH STRUCTURE.
4. METER SETTER MUELLER H–1423 SERIES OR FORD 70 SERIES WITH LOCKING BYPASS, GROUND KEY, AND CHECK VALVE.
5. METER BOX – SEE 1–WAT FOR METER BOX & LID EXCEPT USE METER BOX SIZE 17"x30"x18". DUCTILE IRON MAX VIEW METER LID WITH AMR OPENING.
6. EASEMENT PROVIDED TO CITY TO AND AROUND METERS LOCATED OUTSIDE R/W.
7. ALL SERVICES SHALL HAVE WASHINGTON STATE APPROVED RPBA FOR BACKFLOW PREVENTION. CONFIRM LOCATION OF ASSEMBLY WITH CITY. INITIAL AND ANNUAL TEXTING REQUIRED. MULTIFAMILY ALLOWED TO USE DCVA IN LIEU OF RPBA.

| | |
|---|---|
| CITY OF GRANITE FALLS<br>1 1/2" & 2" WATER SERVICE | |
| APPROVED: Warren W Perkins<br>DATE: 10/18/2016 | DWG. NO.<br>2-WAT |

I:\GrFalls\15484 PW Stds\Water Dtl\2-WAT.dwg, 12/5/2016 11:39 AM, WARREN PERKINS

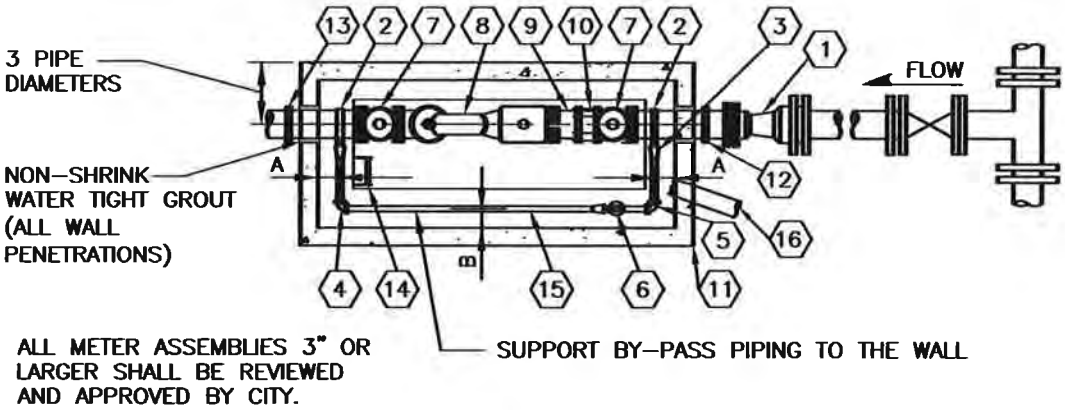


## PLAN

1. REDUCER, M.J.
2. SINGLE STRAP SERVICE CLAMP, ROMAC 101 WITH IPS TAP, OR EQUAL (1 1/2" OR 2" BYPASS, 4-INCH AND LARGER BYPASS REQUIRES D.I. TEE).
3. FITTINGS AS REQUIRED.
4. BEND CPLG COPPER TO COPPER MUELLER H-15525, OR EQUAL.
5. BEND CPLG, COPPER TO OUTSIDE I.P. THREAD MUELLER H-15530, OR EQUAL.
6. BALL VALVE WITH PADLOCK WING OR LOCK CAP, FORD B21-444W OR B21-666 WITH LOCK CAP OR B21-777 WITH LOCK CAP. SIZED TO LINE.
7. RESILIENT SEAT GATE VALVE, FL X FL SIZED TO METER.
8. 3" TO 10" SENSUS METER FOR IRRIGATION SERVICES AND 3" TO 10" COMPOUND METER IF FOR DOMESTIC SERVICE. READ IN CUBIC FEET WITH MXU RADIO UNIT AS SPECIFIED BY CITY SHALL BE FURNISHED AND INSTALLED BY CONTRACTOR.
9. D.I. PIPE SPOOL FL X PE LENGTH TO FIT.
10. FL CPLG. ADAPT.
11. PRECAST CONCRETE VAULT, UTILITY VAULT OR EQUAL, SEE PAGE 2 FOR SIZING AND REQUIREMENTS.
12. MEGA-LUG FOLLOWER INSTALLED ON INFLOW SIDE OF VAULT WITH CONCRETE THRUST BLOCK OR SHACKLE TO THRUST BLOCK TO PREVENT MOVEMENT IF METER IS REMOVED. (BLOCK NOT SHOWN)
13. DIELECTRIC CPLG. TO BUILDING SERVICE. SIZE AS REQUIRED.
14. GALV. STEEL OR ALUMINUM LADDER. SECURE TO VAULT LID AND FLOOR. COORDINATE LOCATION FOR ACCESS.
15. BY-PASS (SIZE BY TABLE BELOW).
16. 4" PVC TO CATCH BASIN OR DAYLIGHT. WHERE GRAVITY DRAIN IS NOT FEASIBLE, PROVIDE SUMP, ELECTRICAL SERVICE AND PUMP WITH DISCHARGE TO SURFACE DRAIN. PUMP SHALL BE 1/2 HP ZOELLER M-53, WITH CHECK VALVE ON DISCHARGE LINE.
17. ALL PIPES AND FITTTINGS 4-INCH OR LARGER SHALL BE DI., CL 52.

**NOTE:**

IF METER IS FOR INTERTIE WITH PUD, PUD STANDARDS APPLY, INCLUDING TELEMETRY REQUIREMENTS.

| METER SIZE | MAIN-LINE | BYPASS | A | B |
|---|---|---|---|---|
| 3" | 4" DI. | 2" COPPER | 9" | 4" |
| 3" | 4" DI. | 2" COPPER | 9" | 4" |
| 4" | 6" DI. | 4" DI. | 9" | 4" |
| 6" | 8" DI. | 4" DI. | 14" | 6" |
| 8" | 10" DI. | 8" DI. | 16" | 6" |

**NOTES:**

SEE PAGE 2 FOR ELEVATION AND NOTES.

# CITY OF GRANITE FALLS

METER AND METER VAULT ASSEMBLY 3" THROUGH 10"

APPROVED: Brian N Perkins

DATE: 10/18/2016

DWG. NO. 3MM



L:\GrFalls\15484 PW Stds\Water Dtl\3MM.dwg, 10/18/2016 3:52 PM, RUSSELL HORITA

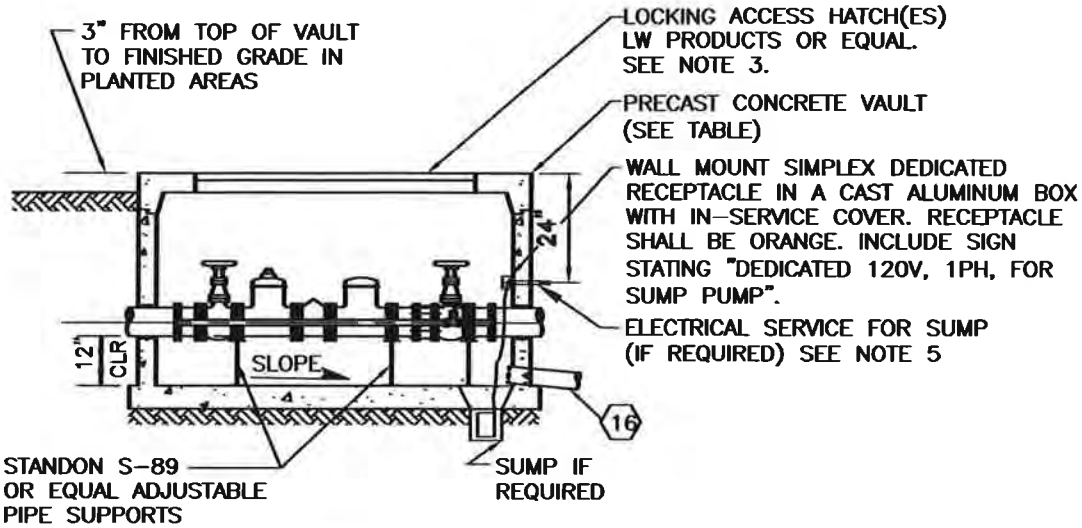


## ELEVATION

SEE DETAIL V-W16A FOR CALLOUTS

| METER SIZE | MAIN-LINE | MINIMUM I/S VAULT DIM. L x W x H | | | UTILITY VAULT CO APPROVED MODEL | MIN. HATCH OPENING |
|---|---|---|---|---|---|---|
| 3" | 4" DI. | 8'-4" | 4'-4" | 6'-2" | 4484-LA | 3' x 6' |
| 4" | 4" DI. | 8'-4" | 4'-4" | 6'-2" | 4484-LA | 3' x 6' |
| 6" | 6" DI. | 10'-6" | 5'-0" | 6'-2" | 5106-LA | 3' x 6' |
| 8" | 8" DI. | 12'-0" | 6'-0" | 6'-6" | 612-LA | 3' x 6' |
| 10" | 10" DI. | 14'-0" | 8'-0" | 6'-6" | 814-LA | 3' x 6' |

NOTES:

1. WASHINGTON STATE APPROVED REDUCED PRESSURE BACKFLOW PREVENTOR REQUIRED. SEE RPBA-2. CONFIRM INSTALLATION WITH CITY. INITIAL AND ANNUAL TEST REQUIRED.
2. METER SHALL BE INSTALLED SUCH THAT IT CAN BE READ WITHOUT ENTERING VAULT WITH ACCESS HATCH OPEN.
3. COORDINATE ORIENTATION OF HATCH(ES) TO PROVIDE CLEAR VERTICAL ACCESS TO METER ASSEMBLY, AND WITH LADDER LOCATION. VERIFY WITH CITY.
4. DRAIN DRAIN HATCH(ES) TO VAULT FLOOR WITH PVC PIPE AND FITTINGS.
5. 3/4" (MINIMUM) PVC SCH-40 CONDUIT. WIRING SHALL BE COMPLETELY SEALED 120V, UNDER GROUND. CONTRACTOR TO SEAL CONDUIT PENETRATION WITH NON-SHRINK GROUT. (NOT REQUIRED IF GRAVITY VAULT DRAIN PROVIDED).
6. ESMT TO BE PROVIDED TO CITY AROUND METERS LOCATED OUTSIDE RIGHT-OF-WAY.
7. SEE PAGE 1 FOR PLAN AND NOTES.

CITY OF GRANITE FALLS

METER AND METER VAULT ASSEMBLY 3" THROUGH 10"

APPROVED: Warren W Perkins

DATE: 10/18/2016

DWG. NO. 3MM



L:\GrFalls\15484 PW Stds\Water Dtl\3MM.dwg, 10/18/2016 3:52 PM, RUSSELL HORITA

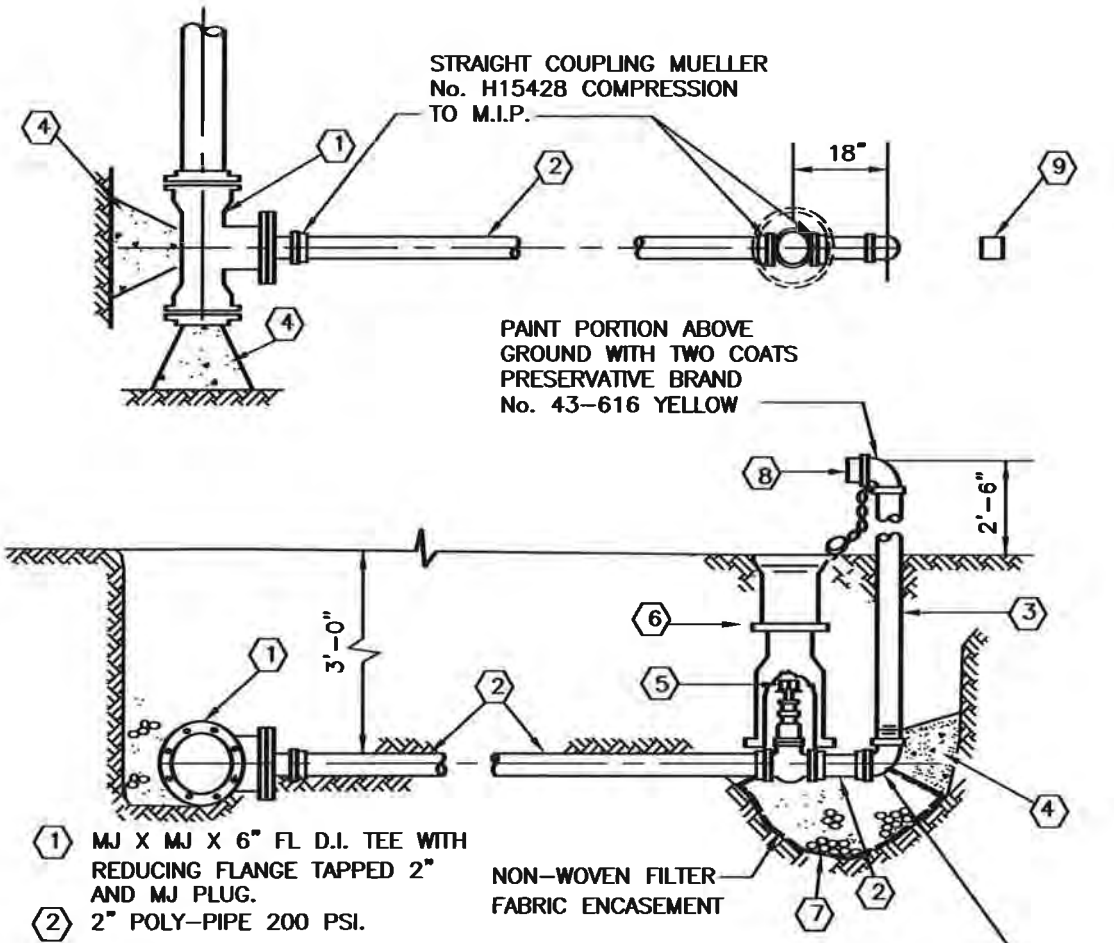


1. MJ X MJ X 6" FL D.I. TEE WITH REDUCING FLANGE TAPPED 2" AND MJ PLUG.
2. 2" POLY-PIPE 200 PSI.
3. 2" GALVANIZED IRON PIPE.
4. CONCRETE THRUST BLOCK.
5. 2" AWWA RESILIENT SEAT GATE VALVE, THD X THD, WITH OPERATING NUT.
6. CAST IRON VALVE BOX
7. 1/4 CUBIC YARD WASHED GRAVEL POCKET.
8. 2" x 2-1/2" HOSE THREADS BRASS INSERT WITH CAP AND CHAIN
9. VALVE MARKER POST

NOTES

1. TURN NOZZEL TOWARDS ROADSIDE DITCH
2. INSTALL DIELECTRIC COUPLINGS AT DISSIMILAR METALS.
3. TEMPORARY BLOWOFFS INSTALLED FOR FLUSHING WATERMAIN SHALL BE SIZED TO PROVIDE 2.5fps VELOCITY IN MAIN LINE.

CITY OF GRANITE FALLS

PERMANENT END-LINE BLOW OFF ASSEMBLY

APPROVED: Warren R. Perkins

DATE: 10/18/2016

DWG. NO. BLOW-OFF2

L:\GrFalls\15484 PW Stds\Water Dtl\BLOW-OFF2.dwg, 10/18/2016 3:53 PM, RUSSELL HORITA

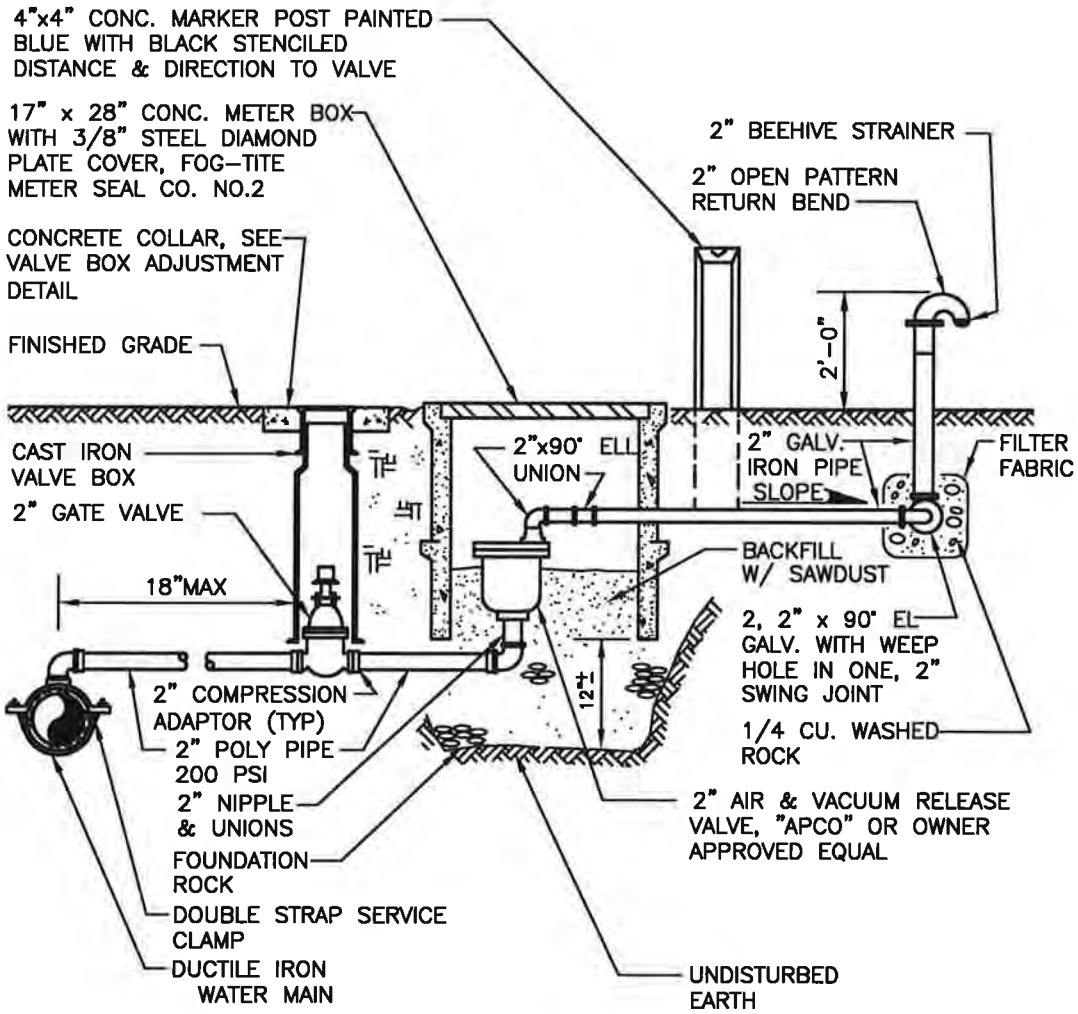


NOTES:

1. GATE VALVE: AWWA RESILIENT SEAL, THRD x THRD WITH OPERATING NUT
2. ALL PIPING BETWEEN DOUBLE STRAP SADDLE AND INLET SIDE OF COMBINATION AIR & VAC ASSEMBLY SHALL BE TYPE K COPPER
3. TAP MAIN AT SYSTEM HIGH POINT. LOCATION TO BE APPROVED BY THE CITY
4. PAINT PORTION ABOVE GROUND WITH TWO COATS RUSTOLEUM "CAUTION BLUE" ENAMEL

# CITY OF GRANITE FALLS

AIR & VACUUM RELEASE ASSEMBLY

APPROVED: Warren W Perkins

DATE: 10/30/17

DWG. NO. AIR-RLS

I:\GrFalls\15484 PW Stds\Water Dtl\AIR-RLS.dwg, 10/30/2017 10:45 AM, WARREN PERKINS

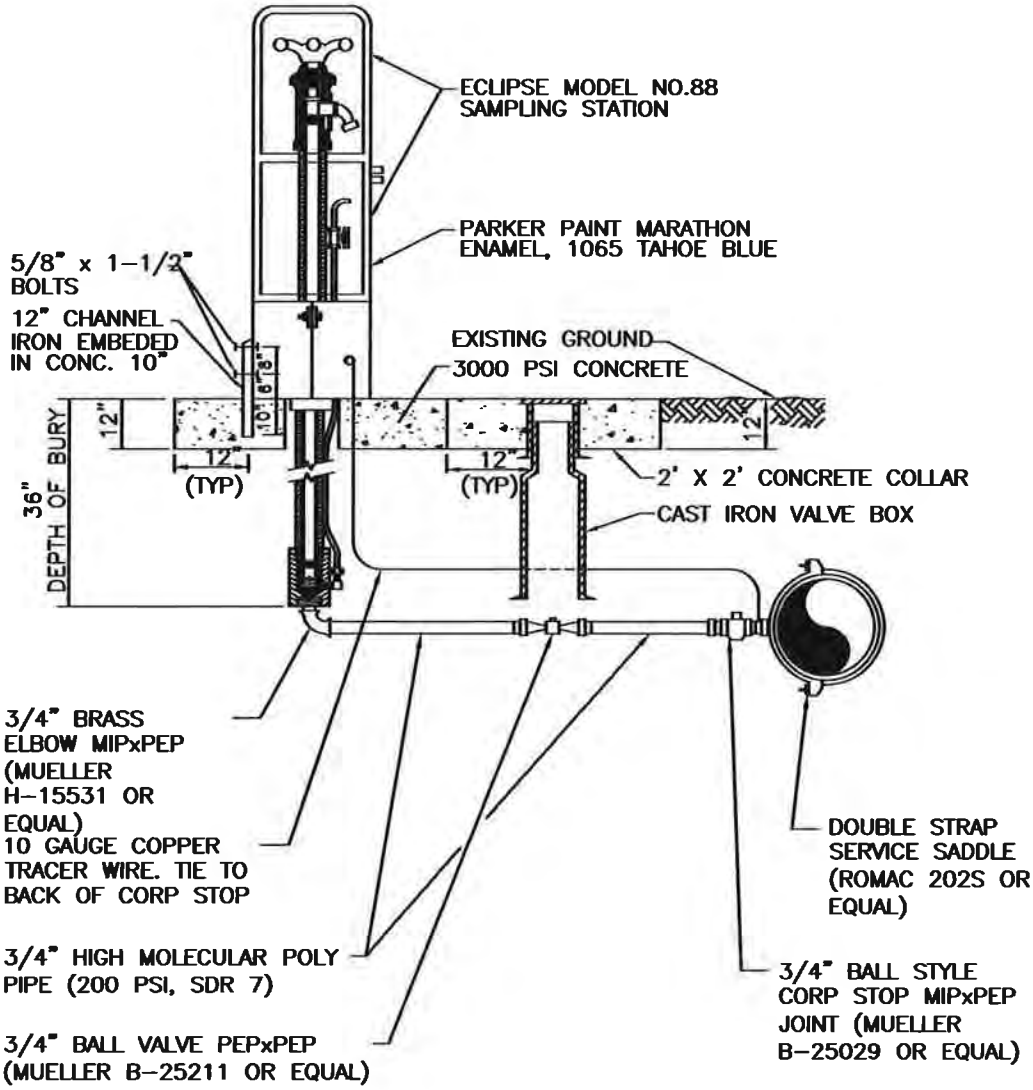


# CITY OF GRANITE FALLS

WATER SAMPLING STATION

APPROVED: Warren W Perkins

DATE: 10/18/2016

DWG. NO.
WAT-SAMP

L:\GrFalls\15484 PW Stds\Water Dtl\WAT-SAMP.dwg, 10/18/2016 3:59 PM, RUSSELL HORTA

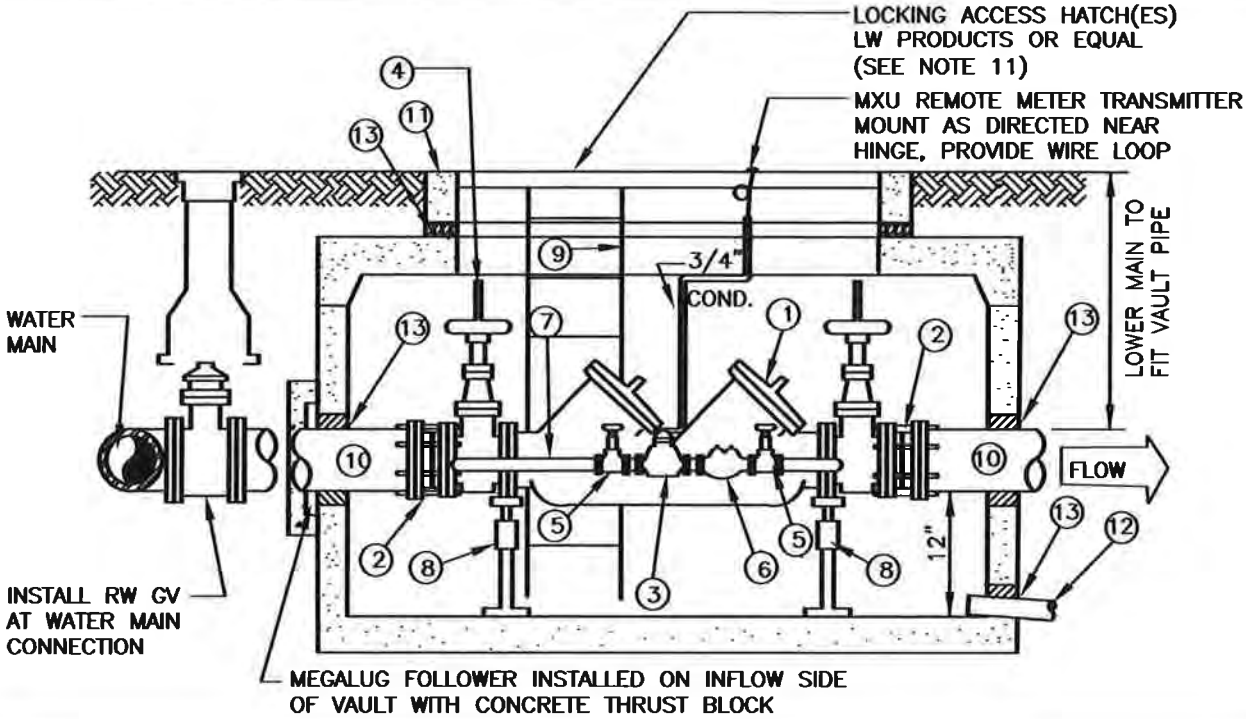


| NO. | DESCRIPTION |
|---|---|
| 1 | STATE APPROVED DOUBLE CHECK DETECTOR ASSEMBLY (DCDA) BACKFLOW PREVENTION ASSEMBLY WITH O.S.&Y. R.W. GATE VALVE |
| 2 | ROMAC STYLE 'FCA 501' FLANGED COUPLING ADAPTER |
| 3 | 5/8" x 3/4" SENSUS CUBIC FEET READING METER COMPLETE WITH SPUD NUT |
| 4 | LOCATE CENTER OF VALVE 15" FROM CENTER OF VAULT TO ALLOW STEMS TO EXTEND INTO ACCESS OPENING WHEN APPLICABLE |
| 5 | 3/4" SHUTOFF VALVE; BRASS GATE VALVE |
| 6 | STATE APPROVED 3/4" DOUBLE CHECK VALVE ASSEMBLY (DCVA) |
| 7 | BRASS OR TYPE K COPPER, DETECTOR CHECK PIPING (BY PASS LINE) |
| 8 | 2 EA. GALVANIZED ADJUSTABLE STANCHIONS (LOCATE AT ENDS OF DOUBLE CHECK ASSEMBLY) |
| 9 | GALVANIZED STEEL LADDER, LOCATE AS DIRECTED BY CITY, SECURE TO VAULT. |
| 10 | PIPE SPOOL, CL. 52 D.I., PLAIN END |
| 11 | "UTILITY VAULT" OR APPROVED EQUAL<br>4" DCDC, USE 575 LA (4'-2" x 6'-6" x 4'-0" INSIDE)<br>6" DCDC, 4484 LA (4'-4" x 8'-4" x 6'-2" INSIDE)<br>6" DCDC, 5106 LA (5'-0" x 10'-6" x 4'-4" INSIDE)<br>8" DCDC, 5106 LA (5'-0" x 10'-6" x 6'-2" OR 4'-4" INSIDE)<br>10" DCDC, 5106 LA (3 HATCH) (5'-0" x 10'-6" x 6'-2" OR 4'-4")<br>ORIENTATION AND LOCATION OF HATCHES TO PROVIDE CLEAR ACCESS TO VALVES AND DETECTOR CHECK ASSEMBLY |
| 12 | 6" PVC DRAIN, DISCHARGE TO DAYLIGHT OR TO CATCH BASIN. MINIMUM SLOPE 1% UNLESS OTHERWISE APPROVED BY THE CITY. ADD SCREENS AT BOTH ENDS. |
| 13 | WATERTIGHT GROUT, INLET AND OUTLET PIPE, DRAIN PIPE AND ACCESS OPENING |

NOTE:

AFTER PRESSURE TEST AND PURITY SAMPLES ARE RECEIVED, A CERTIFIED BACKFLOW TECHNICIAN SHALL SUPPLY DISTRICT WITH A WRITTEN TEST REPORT ON EACH BACKFLOW ASSEMBLY.

# CITY OF GRANITE FALLS

DOUBLE-CHECK DETECTOR BACKFLOW PREVENTION ASSEMBLY

APPROVED: Marcus R. Perkins

DATE: 10/18/2016

DWG. NO. DCD-BPA

L:\GrFalls\15484 PW Stds\Water Dtl\DCD-BPA.dwg, 10/18/2016 3:54 PM, RUSSELL HORITA

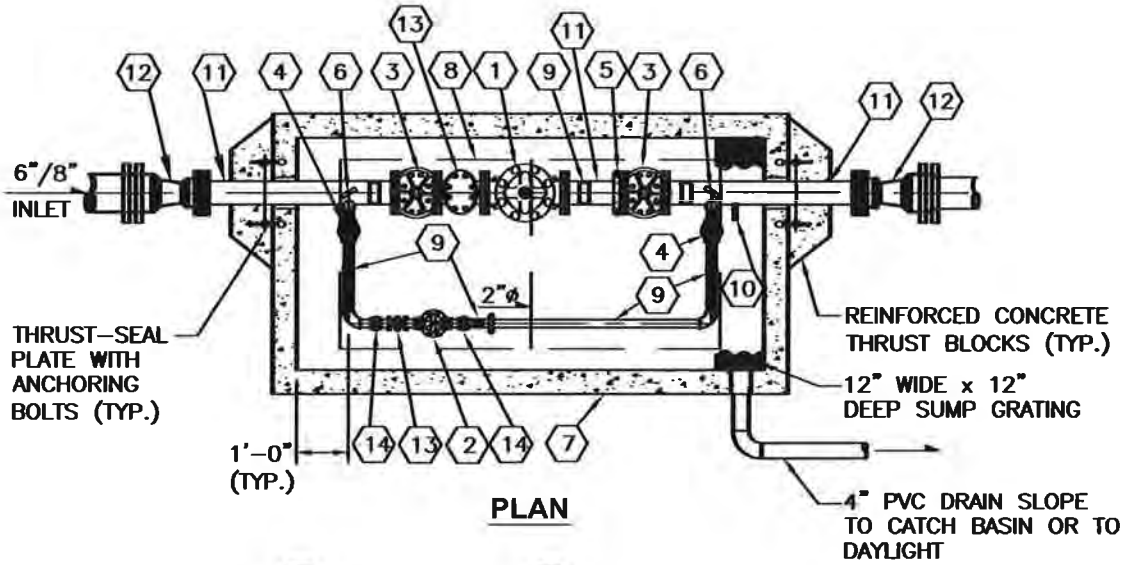


**PLAN**

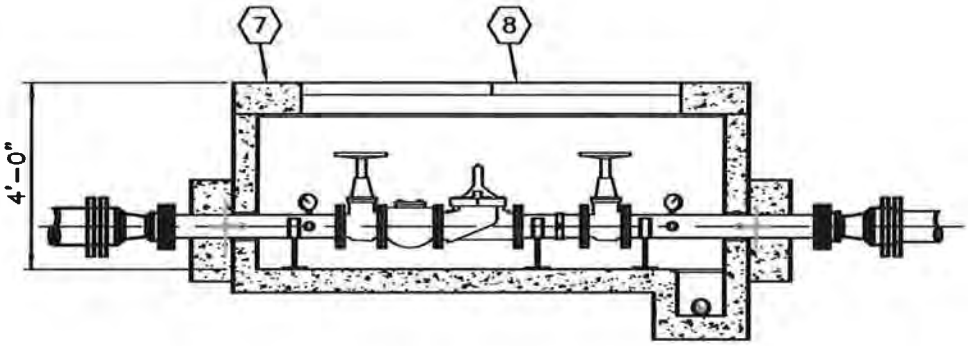


**SECTION**

**NOTE:**

ALTERNATE TO FIELD ASSEMBLED PRV AND VAULT IS SYSTEM AS MANUFACTURED BY GC SYSTEMS.

SEE PAGE 2 FOR CALLOUTS AND NOTES

# CITY OF GRANITE FALLS

PRESSURE REDUCING STATION
(1 OF 2)

APPROVED: Warren R. Perkins

DATE: 10/18/2016

DWG. NO.
PRSD

L:\GrFalls\15484 PW Stds\Water Dtl\PRSD.dwg, 10/18/2016 3:56 PM, RUSSELL HORITA

## PRESSURE REDUCING STATION

(TO BE SIZED BY CITY)

### LEGEND – SEE PAGE 1 FOR PLAN AND SECTION

1. 6" CLA-VAL 90-01 PRESSURE REDUCING VALVE WITH X101 POSITION INDICATOR DI BODY, S.S. TRIM, #150 FL. EPOXY COATING.
2. 2" CLA-VAL 90-01 PRESSURE REDUCING VALVE WITH X101 POSITION INDICATOR DI BODY, BRONZE TRIM – THREADED. EPOXY COATING.
3. 6" D.I. RW NRS GATE VALVE WITH HANDWHEEL, #150 FL.
4. 2" MUELLER A2360-6W41 W55 RW NRS GATE VALVE WITH HANDWHEEL, THD.
5. UNIFLANGE
6. 4" 0-300 PSI PRESSURE GAUGE WITH SNUBBER AND GAUGE COCK; TOP OF PIPE.
7. PRECAST CONCRETE VAULT 10'L x 5'W x 3'-7"H INSIDE, SOLID WALL WITH WHITE INTERIOR & BLACK EXTERIOR SEALANT
8. 48" X 96" DOUBLE DOOR ALUMINUM HATCH, LW PRODUCTS OR EQUAL. H-20 RATED. DRAIN HATCH TO VAULT FLOOR.
9. ADJUSTABLE PIPE SUPPORTS
10. 3/4" HOSE BIB ASSEMBLY
11. PIPE SPOOL (FLxPE) LENGTH AS REQUIRED.
12. REDUCER (AS REQUIRED), MJ WITH MEGA-LUGS
13. WATER METER STRAINER, INVENSYS CLA-VAL H-STRAINER OR EQUAL, (FL)
14. UNIONS

### NOTES:

1. 6" x 2" PRV ASSEMBLY SHOWN. SIZES TO BE DETERMINED BY THE CITY BASED ON DOWNSTREAM DEMANDS.
2. ALL 3" AND LARGER PIPE INSIDE WETTED SURFACES SHALL BE MORTAR LINED DUCTILE IRON OR SHALL BE SANDBLASTED, EPOXY LINED AND COATED TO AWWA C210 AND NSF-61 SPECIFICATION. EXTERIOR COATING SHALL BE BLUE ENAMEL.
3. ALL PIPE 2" AND SMALLER TO BE BRASS.
4. ADDITIONAL FEATURES MAY BE REQUIRED BY CITY.

| | |
|---|---|
| CITY OF GRANITE FALLS<br>PRESSURE REDUCING STATION<br>(2 OF 2) | |
| APPROVED: Warren M Perkins<br>DATE: 10/18/2016 | DWG. NO.<br>PRSD |

L:\GrFalls\15484 PW Stds\Water Dtl\PRSD.dwg, 10/18/2016 3:56 PM, RUSSELL HORITA

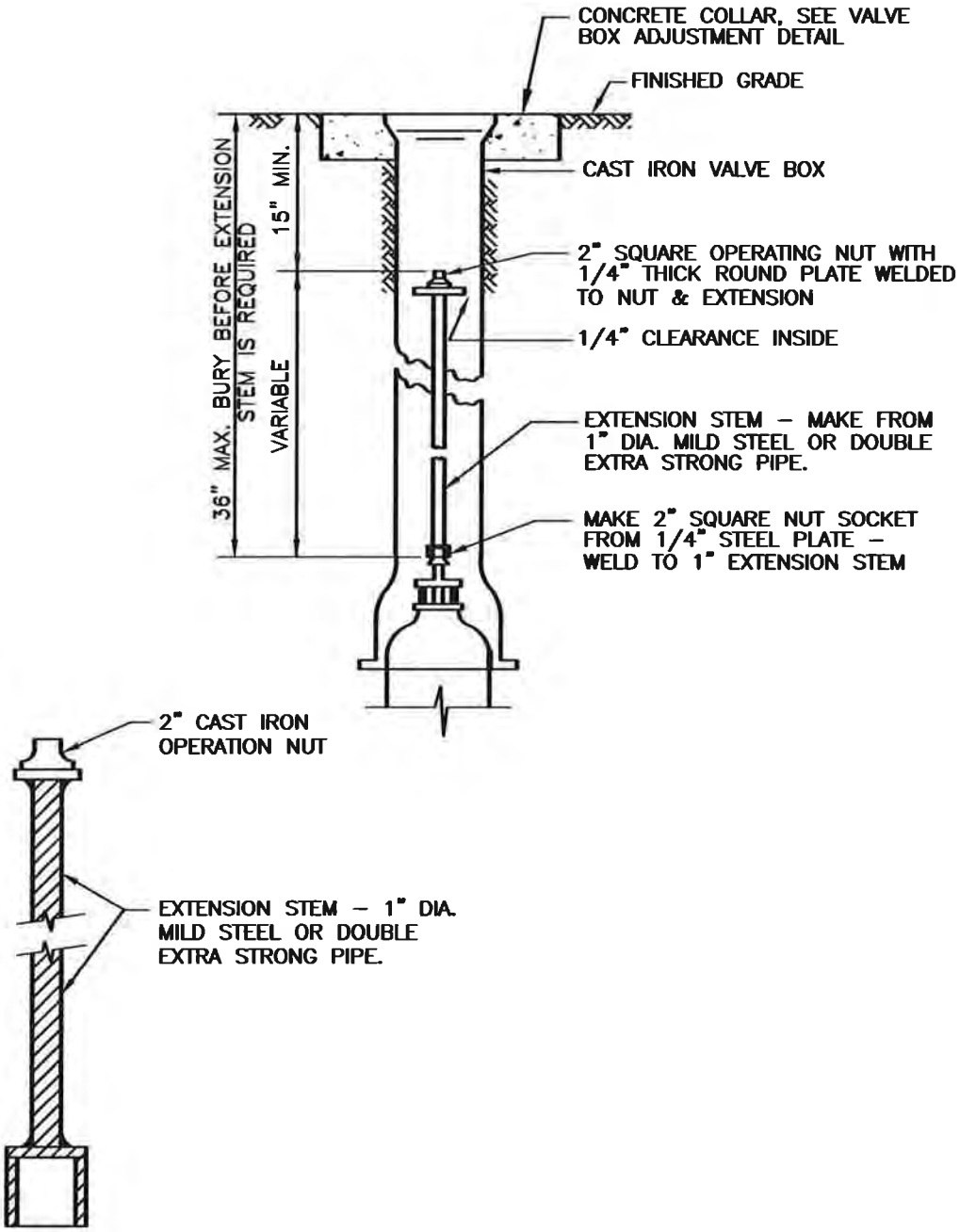


# CITY OF GRANITE FALLS

WATER VALVE STEM EXTENSION

APPROVED: Warren W Perkins

DATE: 10/18/2016

DWG. NO. WAT-VALV

L:\GrFalls\15484 PW Stds\Water Dt\WAT-VALV.dwg, 10/18/2016 4:00 PM, RUSSELL HORITA

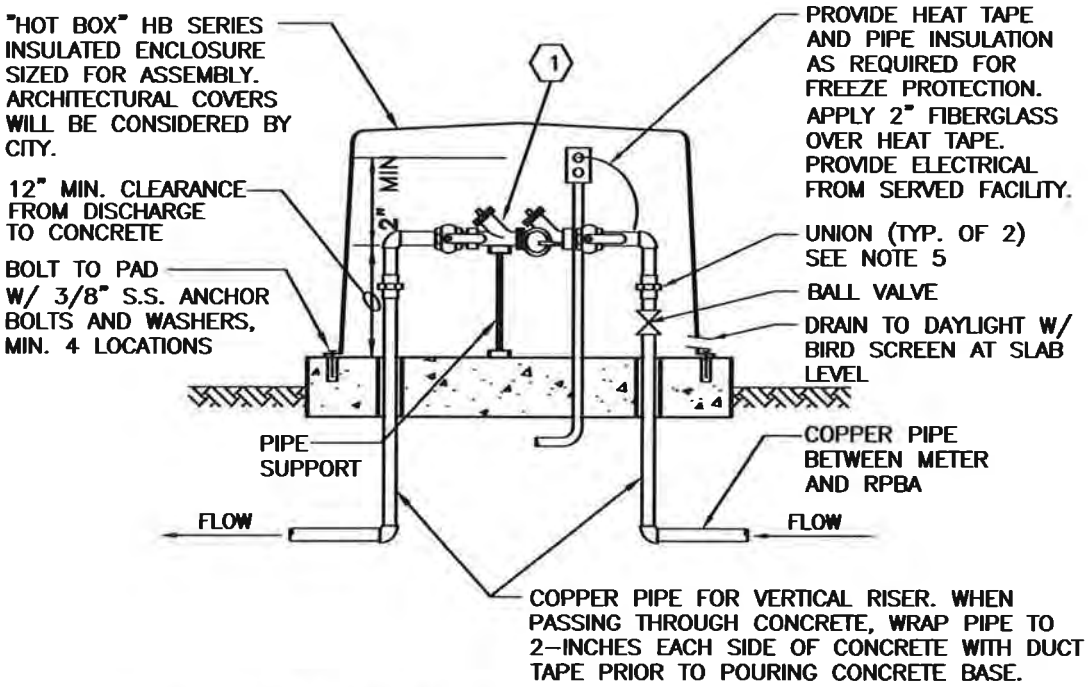


**REDUCED PRESSURE BACKFLOW DEVICE (<3")**

NOT TO SCALE

(1) WASHINGTON STATE APPROVED REDUCED PRESSURE BACKFLOW ASSEMBLY (RPBA) WITH TEST COCK PROTECTION AND BRONZE BODY BALL VALVE AT EACH END.

NOTES:

1. CONCRETE TO BE 2500 PSI (MINIMUM) MIX WITH AIR ENTRAINMENT.
2. COMPLETE ALL WORK IN ACCORDANCE WITH STATE, CITY AND MANUFACTURER STANDARDS.
3. SYSTEM SHALL NOT BE PUT INTO SERVICE UNTIL RPBA IS APPROVED BY THE CITY AND TESTED/CERTIFIED BY A WASHINGTON STATE LICENSED TESTER.
4. RPBA IS CONSIDERED PART OF THE PRIVATE SYSTEM AND SHALL BE MAINTAINED BY THE PROPERTY OWNER WITH ANNUAL CERTIFICATION REQUIRED.
5. DIELECTRIC UNIONS SHALL BE USED TO SEPARATE DISSIMILAR MATERIALS.
6. NO BRANCH CONNECTIONS ALLOWED BETWEEN METER AND RPBA.

| | |
|---|---|
| CITY OF GRANITE FALLS<br>REDUCED PRESSURE BACKFLOW ASSEMBLY 3/4" TO 2" | |
| APPROVED: Warren W Perkins<br>DATE: 10/18/2016 | DWG. NO.<br>RPBA |

L:\GrFalls\15484 PW Stds\Water Dtl\RPBA.dwg, 10/18/2016 3:57 PM, RUSSELL HORITA

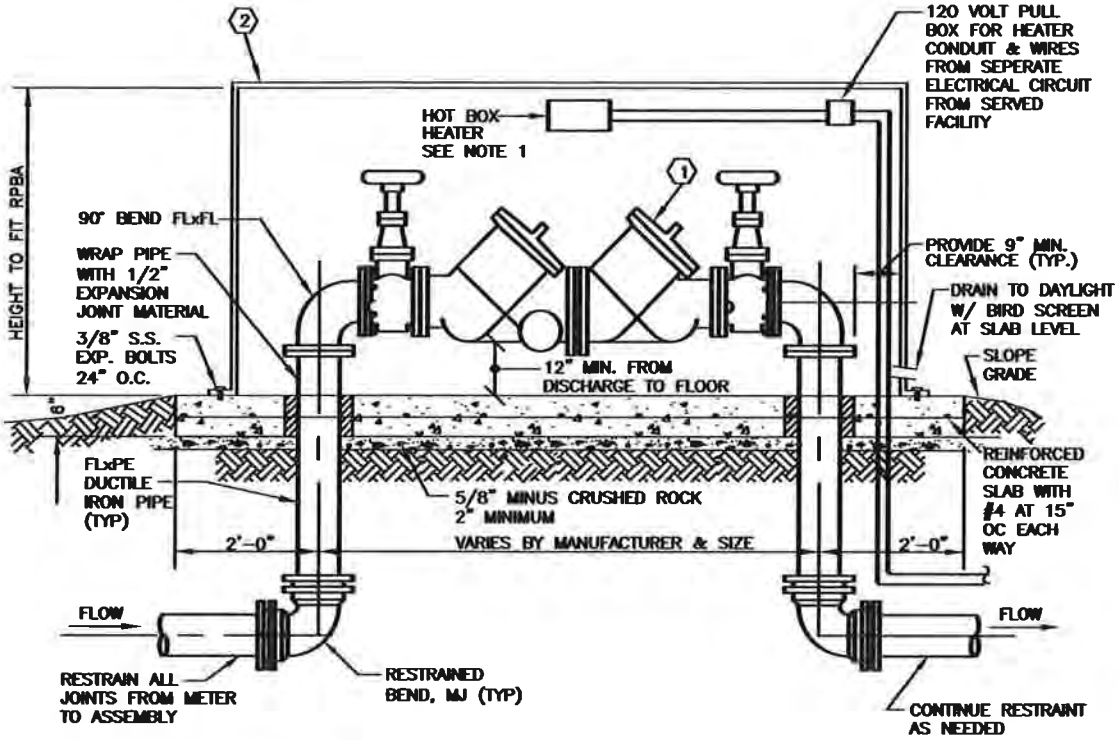


(1) WASHINGTON STATE APPROVED REDUCED PRESSURE BACKFLOW ASSEMBLY (RPBA) WITH RESILIENT SEAT GATE VALVE EACH END

(2) ALUMINUM "HOT BOX" MODELS 4 THROUGH 10 FOR RESPECTIVE SIZE RPBA SHALL BE MODIFIED TO FIT ABOVE HEIGHT REQUIREMENTS. VALVE STEM SHALL NOT EXTEND OUTSIDE OF BOX.

NOTES:

1. "HOT BOX" TO BE LOCATED OUTDOORS AND ACCESSIBLE TO CITY. ALTERNATE LOCATION REQUIRES CITY APPROVAL.
2. HEATERS AND WIRING SHALL BE RATED AT 2,000 WATT FOR 8" AND UNDER: 3,000 WATT FOR 10".
3. CONCRETE TO BE 2500 PSI (MINIMUM) MIX WITH AIR ENTRAINMENT.
4. COMPLETE ALL WORK IN ACCORDANCE WITH STATE, CITY AND MANUFACTURER STANDARDS.
5. SYSTEM SHALL NOT BE PUT INTO SERVICE UNTIL RPBA IS APPROVED BY THE CITY AND TESTED/CERTIFIED BY A WASHINGTON STATE LICENSED TESTER.
6. RPBA IS CONSIDERED PART OF THE PRIVATE SYSTEM AND SHALL BE MAINTAINED BY THE PROPERTY OWNER WITH ANNUAL CERTIFICATION REQUIRED.
7. DRAIN TO DAYLIGHT WITH BIRD SCREEN LOCATED AT SLAB LEVEL (SIZED PER MANUFACTUERS RECOMMENDATION).
8. NO BRANCH CONNECTIONS ALLOWED BETWEEN METER AND RPBA.

# CITY OF GRANITE FALLS

REDUCED PRESSURE BACKFLOW ASSEMBLY 3" AND LARGER

APPROVED: Warren W Perkins

DATE: 10/18/2016

DWG. NO. RPBA-2

L:\GrFalls\15484 PW Stds\Water Dtl\RPBA-2.dwg, 10/18/2016 3:57 PM, RUSSELL HORITA

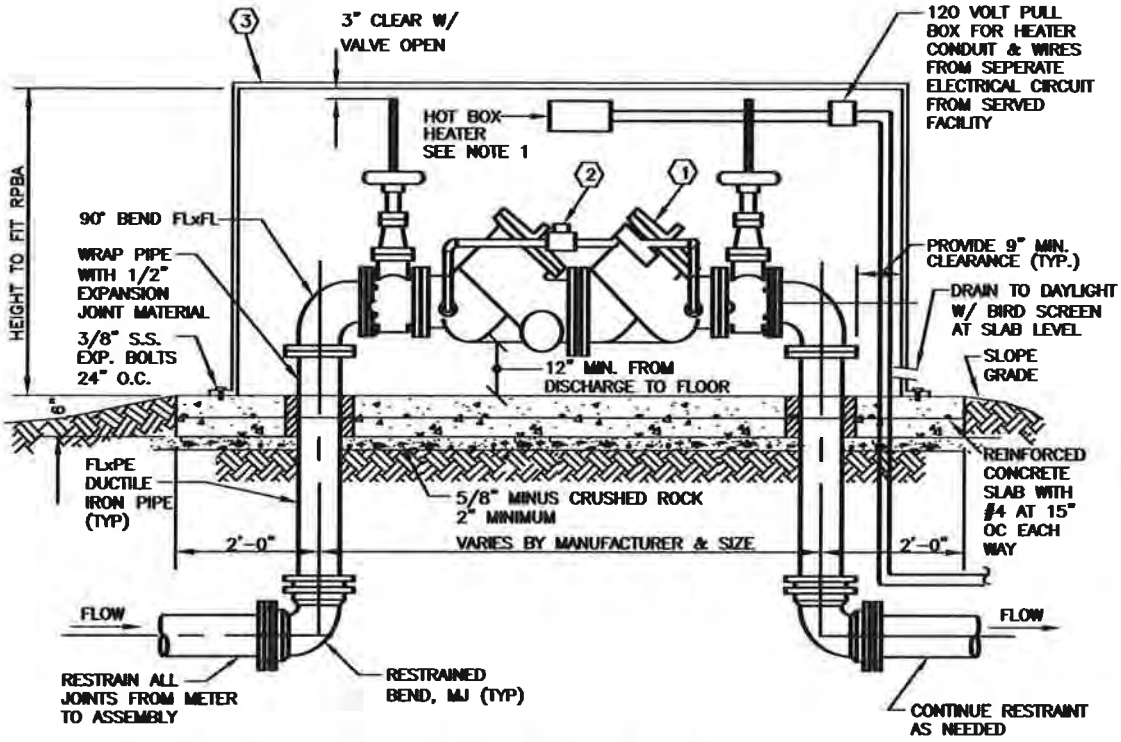


(1) WASHINGTON STATE APPROVED REDUCED PRESSURE BACKFLOW ASSEMBLY (RPBA) WITH OS&Y RESILIENT SEAT GATE VALVE EACH END AND LOW FLOW METER ASSEMBLY.

(2) LOW FLOW BYPASS METER, INCLUDING 5/8"x3/4" SENSUS RADIO READ WATER METER WITH SENSUS AMR AND MXU RADIO UNIT, WASHINGTON STATE APPROVED DOUBLE CHECK VALVE ASSEMBLY (DCVA) AND 2 BRONZE BODY ISOLATION BALL VALVES, BRASS OR TYPE K COPPER PIPING.

(3) ALUMINUM "HOT BOX" MODELS 4 THROUGH 10 FOR RESPECTIVE SIZE RPBA SHALL BE MODIFIED TO FIT ABOVE HEIGHT REQUIREMENTS. VALVE STEM SHALL NOT EXTEND OUTSIDE OF BOX.

NOTES:

1. HEATERS AND WIRING SHALL BE RATED AT 2,000 WATT FOR 8" AND UNDER: 3,000 WATT FOR 10".
2. CONCRETE TO BE 2500 PSI (MINIMUM) MIX WITH AIR ENTRAINMENT.
3. COMPLETE ALL WORK IN ACCORDANCE WITH STATE, CITY AND MANUFACTURER STANDARDS.
4. SYSTEM SHALL NOT BE PUT INTO SERVICE UNTIL RPBA IS APPROVED BY THE CITY AND TESTED/CERTIFIED BY A WASHINGTON STATE LICENSED TESTER.
5. RPBA IS CONSIDERED PART OF THE PRIVATE SYSTEM AND SHALL BE MAINTAINED BY THE PROPERTY OWNER WITH ANNUAL CERTIFICATION REQUIRED.
6. DRAIN TO DAYLIGHT WITH BIRD SCREEN LOCATED AT SLAB LEVEL (SIZED PER MANUFACTUERS RECOMMENDATION).
7. NO BRANCH CONNECTIONS ALLOWED BETWEEN METER AND RPBA.

CITY OF GRANITE FALLS

REDUCED PRESSURE BACKFLOW DETECTOR ASSEMBLY 3" AND LARGER

APPROVED: Warren W. Perkins

DATE: 10/18/2016

DWG. NO. RPBA-2

L:\GrFalls\15484 PW Stds\Water Dtl\RPBA-2.dwg, 10/18/2016 3:57 PM, RUSSELL HORITA

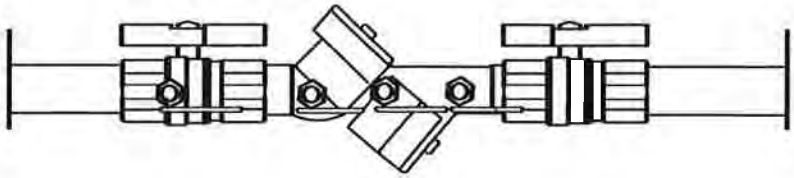

PLAN VIEW

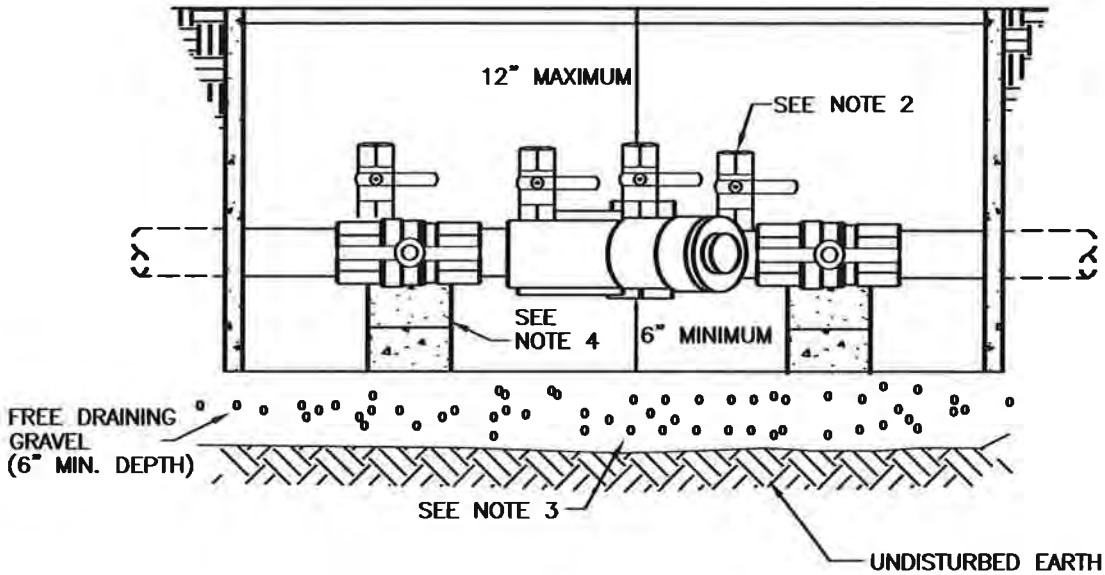


NOTES:

1. MINIMUM BOX SIZE 3/4"– 1" ASSEMBLIES, 10"x13" 1 1/4"– 2" ASSEMBLIES, 14"x20"
2. ASSEMBLY MUST BE INSTALLED WITH TEST COCKS FACING UP OR TO ONE SIDE. INSTALL WATERTIGHT PLUGS IN ALL TEST COCKS.
3. SUFFICIENT DRAINAGE MUST BE PROVIDED TO PREVENT ASSEMBLY FROM BEING SUBMERGED.
4. PROVIDE SUPPORT BLOCKS AS MAY BE REQUIRED.
5. PROVIDE A STRAINER WITH BLOW OUT VALVE AHEAD OF DEVICE IF REQUIRED BY CITY.
6. THOROUGHLY FLUSH THE LINE, PRIOR TO THE INSTALLATION OF THE DCVA.
7. PROTECT DEVICE FROM FREEZING BY INSTALLING IN BELOW GROUND STRUCTURE OR PER "HOT BOX" SHOWN IN REDUCED PRESSURE BACKFLOW DEVICE DETAIL.

CITY OF GRANITE FALLS

"INDIVIDUAL" DOUBLE CHECK DETECTOR ASSEMBLY

APPROVED: Warren W Perkins

DATE: 10/18/2016

DWG. NO. DBL-CHCK

L:\GrFalls\15484 PW Stds\Water Dtl\DBL-CHCK.dwg, 10/18/2016 3:53 PM, RUSSELL HORITA

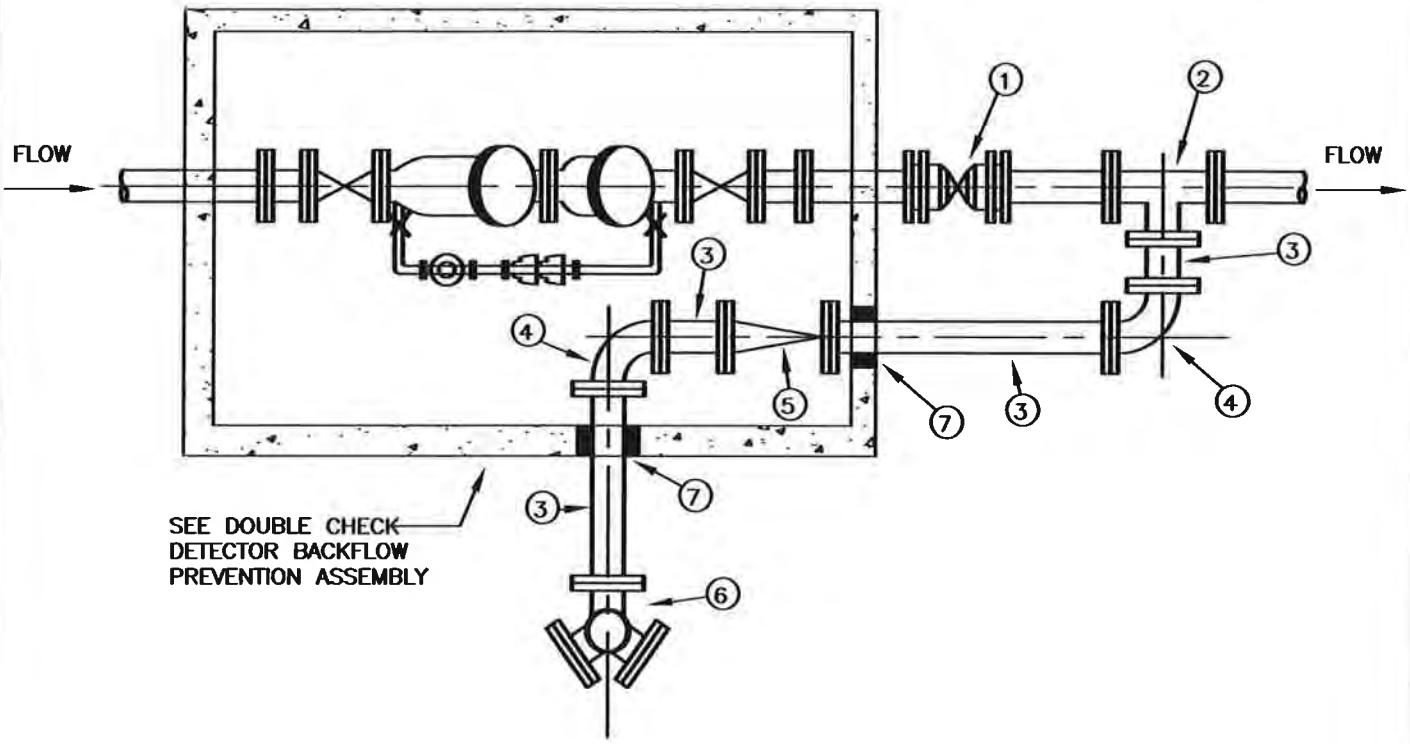


| NO. | DESCRIPTION |
|---|---|
| 1 | POST INDICATOR VALVE, MJ WITH MEGALUGS |
| 2 | 4" TEE, MJ WITH MEGALUGS OR FLANGE |
| 3 | 4" DUCTILE IRON PIPE, CLASS 52 |
| 4 | 4" x 90° BENDS, MJ WITH MEGALUGS OR FLANGE |
| 5 | 4" FLAPPER CHECK VALVE, MJ WITH MEGALUGS OR FLANGE |
| 6 | FIRE DEPARTMENT CONNECTION, MJ WITH MEGALUGS OR FLANGE. CONNECTION TO COMPLY WITH FIRE DEPARTMENT REQUIREMENTS. |
| 7 | WATERTIGHT GROUT |

# CITY OF GRANITE FALLS

FIRE LINE CONNECTION

APPROVED: Warren W Perkins

DATE: 10/18/2016

DWG. NO.
FIRELINE

L:\GrFalls\15484 PW Stds\Water Dtl\FIRELINE.dwg, 10/18/2016 3:56 PM, RUSSELL HORITA

# MISCELLANEOUS DETAILS

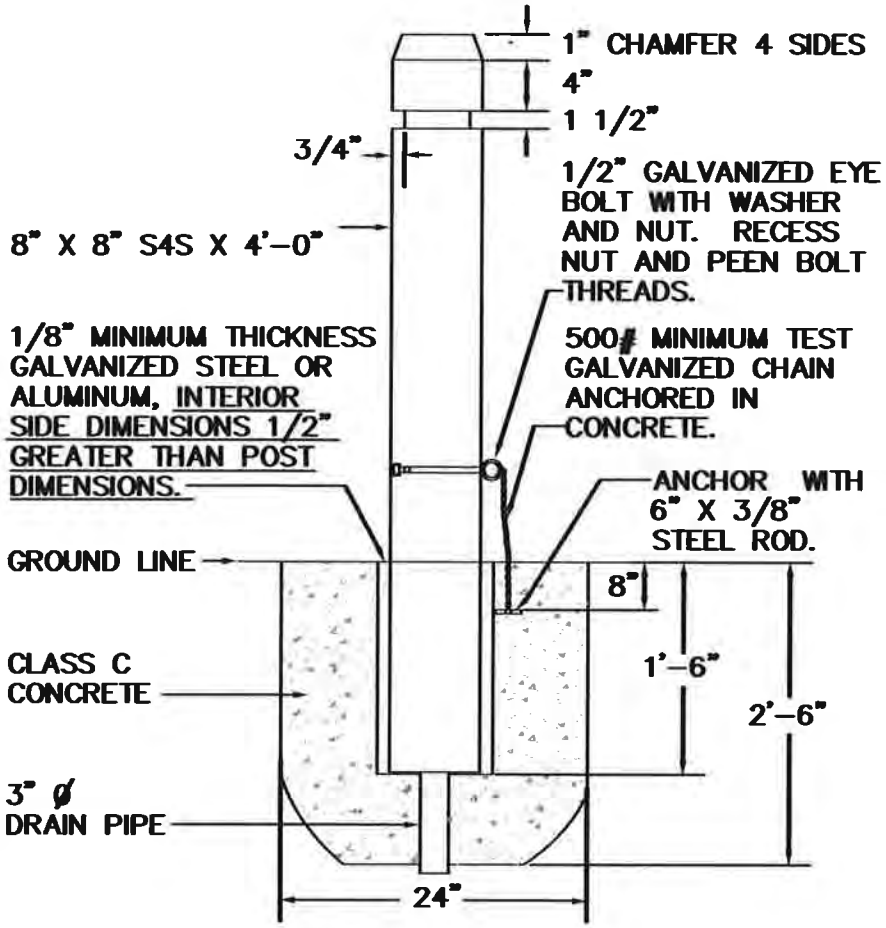


1. TIMBER SHALL BE DOUGLAS FIR, DENSE CONSTRUCTION GRADE, AND SHALL BE PENTACHLOROPHENOL PRESSURE TREATED BY EMPTY CELL PROCESS WITH MINIMUM NET RETENTION OF 0.05 LBS./CU. FOOT OF THE DRY SALT. (USE LIGHT PETROLEUM SOLVENT.)
2. STEEL TUBE SHALL CONFORM T ASTM A53 OR ASTM A53 GRADE A.
3. NUTS, BOLTS, AND WASHERS SHALL CONFORM TO W.S.D.O.T. STANDARD.
4. ALL STEEL PARTS SHALL BE GALVANIZED.
5. CONCRETE SHALL BE 3000 PSI.

CITY OF GRANITE FALLS

**REMOVABLE BOLLARD**

APPROVED: Warren W Perkins

DATE: 10/18/2016

DWG. NO. REM-BOL

L:\GrFalls\15484 PW Stds\Misc Dtl\REM-BOL.dwg, 10/18/2016 4:29 PM, RUSSELL HORITA

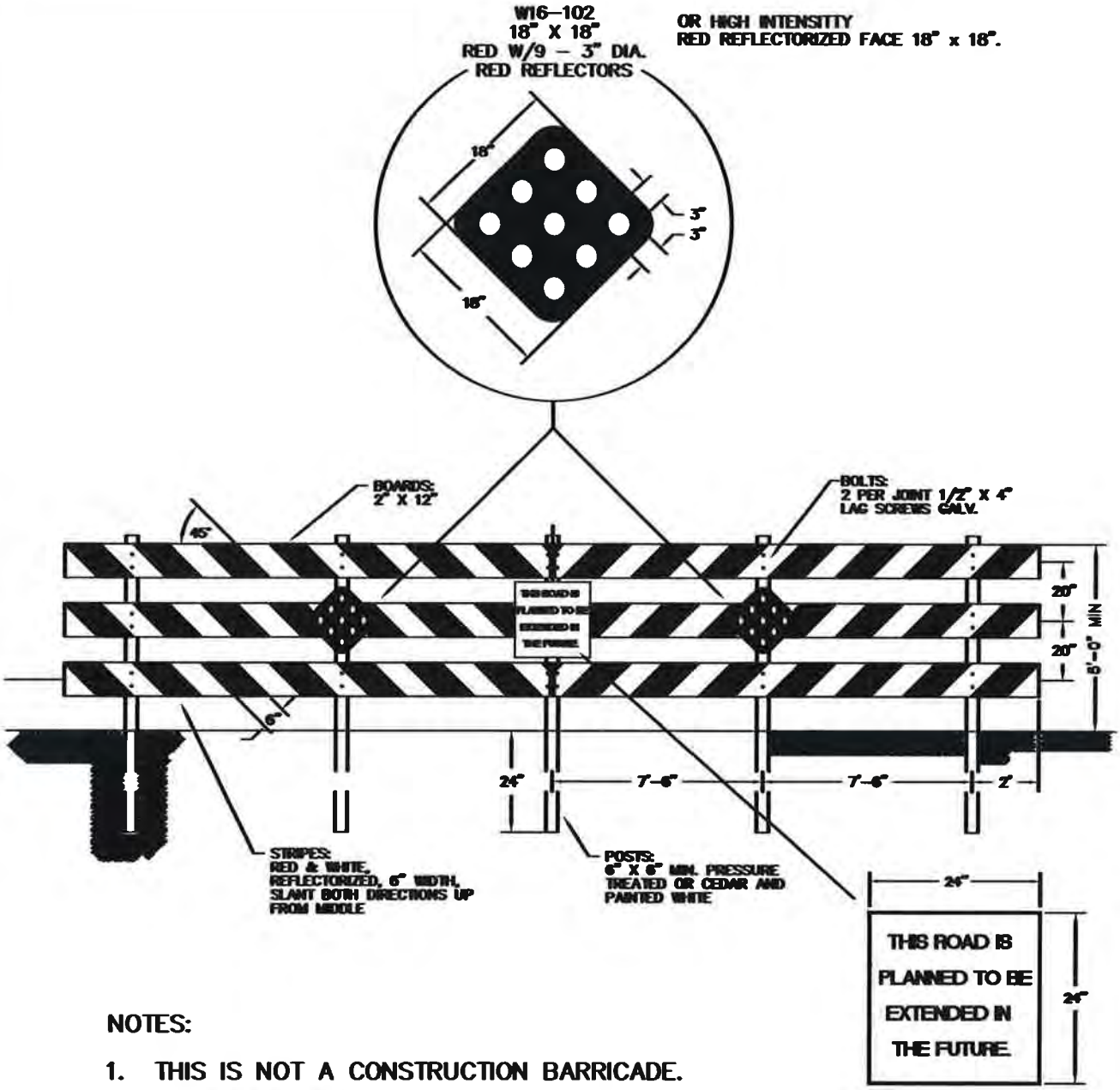


**NOTES:**

1. THIS IS NOT A CONSTRUCTION BARRICADE.
2. THE WORDS "THIS ROAD IS PLANNED TO BE EXTENDED IN THE FUTURE" SHALL BE STENCILED IN 6 INCH WHITE LETTERS ON PAVEMENT APPROXIMATELY 10 FEET FROM BARRICADE.

| | |
|---|---|
| CITY OF GRANITE FALLS<br>**TYPE III BARRICADE FOR FUTURE ROAD EXTENSION** | |
| APPROVED: Warren W. Pickett<br>DATE: 10/18/2016 | DWG. NO.<br>BARICADE |

L:\GrFalls\15484 PW Stds\Misc Dt\BARICADE.dwg, 10/18/2016 4:31 PM, RUSSELL HORITA

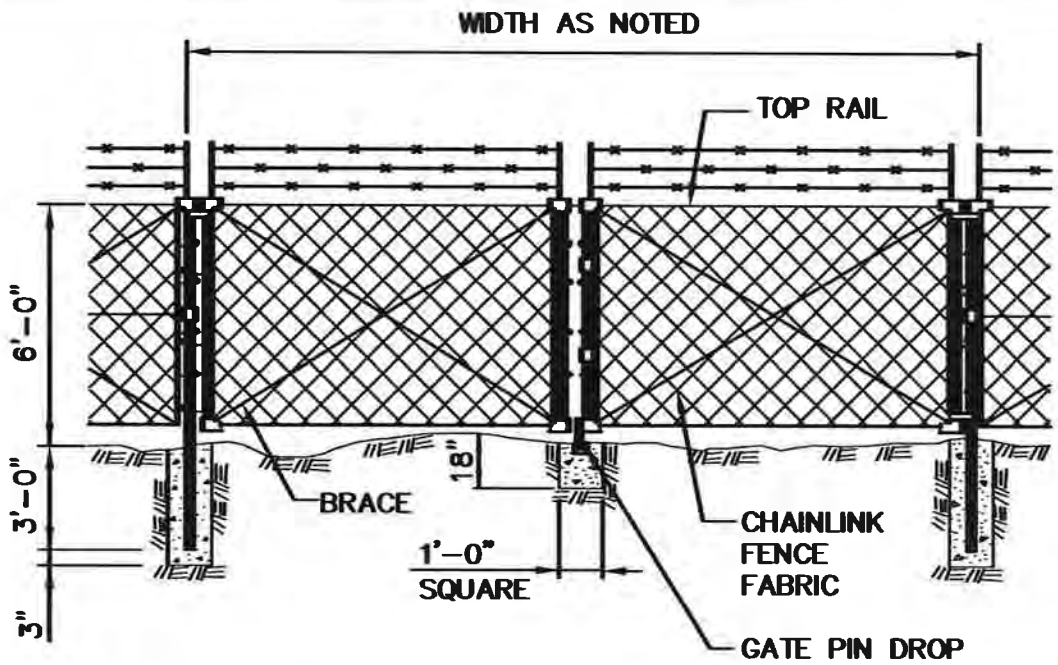


GATE ELEVATION

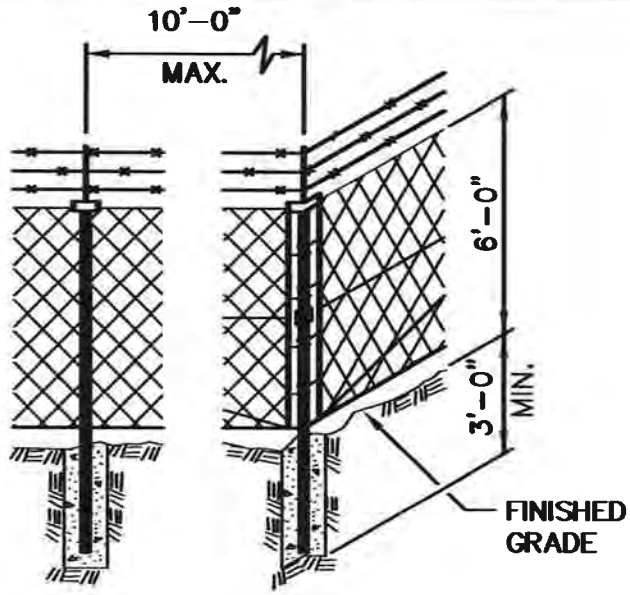


CORNER POST

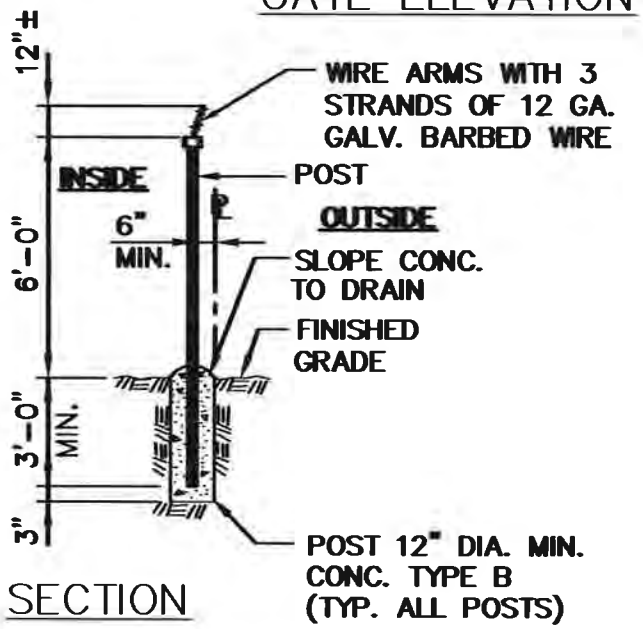


SECTION

**NOTES:**

1. CHAINLINK FENCE AND GATE SHALL BE FURNISHED AND INSTALLED ACCORDING TO THE WASHINGTON STATE DEPARTMENT OF TRANS-PORTATION STANDARD SPECIFICATIONS FOR CHAINLINK FENCE TYPE 3 AS DETAILED ON STANDARD PLANS L-20.10-00.
2. CORNER POSTS SHALL BE INSTALLED AT ALL POINTS WHERE THE ALIGNMENT CHANGES 30° OR MORE.

CITY OF GRANITE FALLS

**SWING GATE AND FENCE DETAILS**

APPROVED: Warren A. Peterson

DATE: 10/18/2016

DWG. NO.
SGF-1

**NOTES:**

1. WHERE POSSIBLE, MAINTAIN NATURAL VEGETATION FOR SILT CONTROL.
2. FILTER FABRIC FENCES OR STRAW BALES TO BE LOCATED AT THE BOTTOM OR TOE OF NEWLY EXCAVATED SLOPES AS INDICATED ON THE PLANS.
3. CONSTRUCT GRAVEL SACK CHECK DAMS IN OPEN DITCHES OR SWALES AS REQUIRED.
4. TO PROVIDE EROSION CONTROL ON STEEP AND NEWLY GRADED SLOPES, CONTRACTOR SHALL EMPLOY EROSION CONTROL BLANKET OR CLEAR PLASTIC IMEDIATELY AFTER GRADING SLOPES AND THE APPLICATION OF SEEDING. THIS SHALL BE DONE AND IN PLACE BEFORE THE FALL RAINFALL BEGINS.
5. ALL TEMPORARY EROSION CONTROL STRUCTURES SHALL BE MAINTAINED IN SATISFACTORY CONDITION UNTIL CLEARING AND/OR CONSTRUCTION IS COMPLETED AND SURFACE RESTORATION HAS BEEN COMPLETED.
6. SEDIMENT SHALL BE REMOVED WHEN LEVEL OF DEPOSITS REACHES ONE-HALF THE HEIGHT OF THE BARRIER.
7. RETURN SILTATION CONTROL AREAS TO ORIGINAL GROUND CONDITIONS.

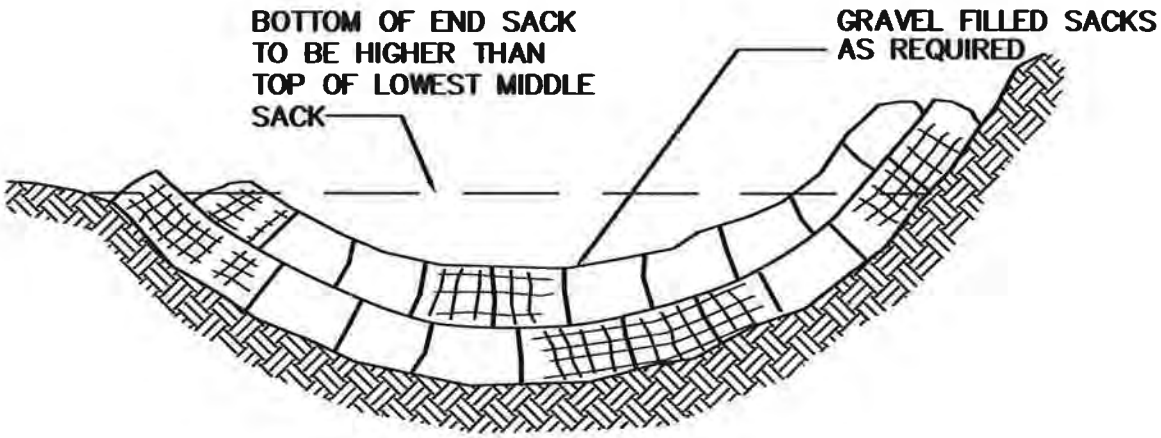


**ELEVATION**

# GRAVEL SACK CHECK DAM

CITY OF GRANITE FALLS

**GRAVEL SACK CHECK DAM**

APPROVED: Warren W Peters

DATE: 10/18/2016

DWG. NO. GRVCK-DAM

L:\GrFalls\15484 PW Stds\Misc Dt\GRVCK-DAM.dwg, 10/18/2016 4:31 PM, RUSSELL HORITA

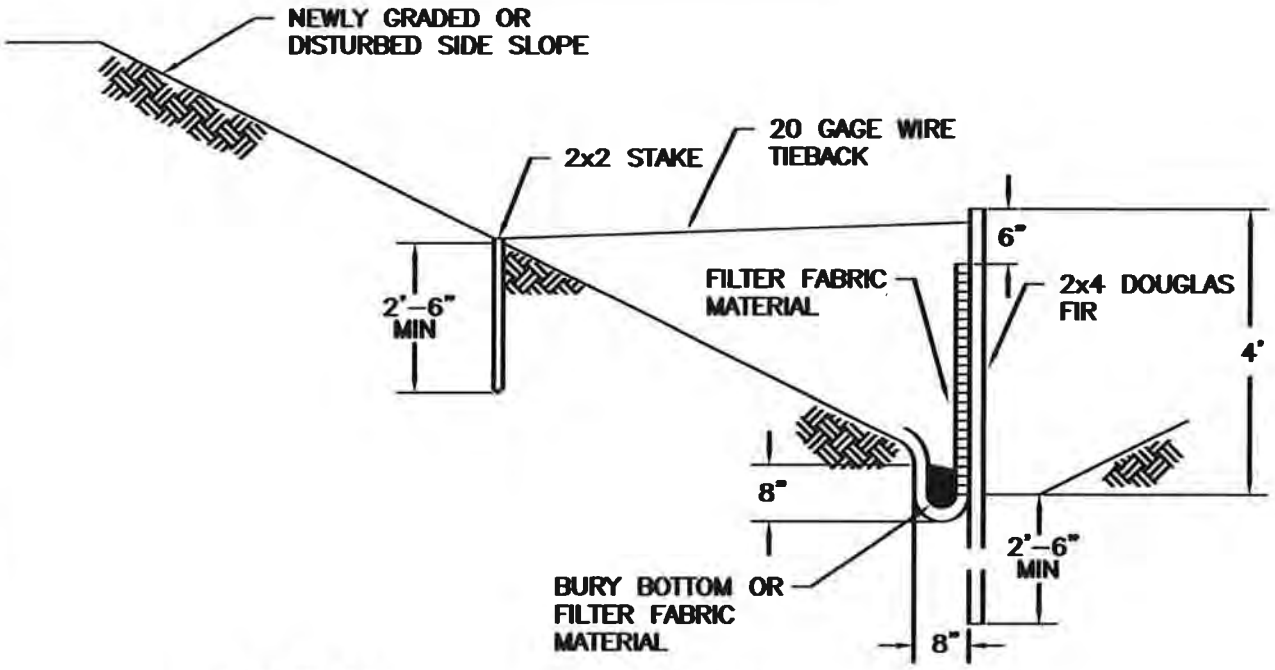


## TYPICAL CROSS SECTION

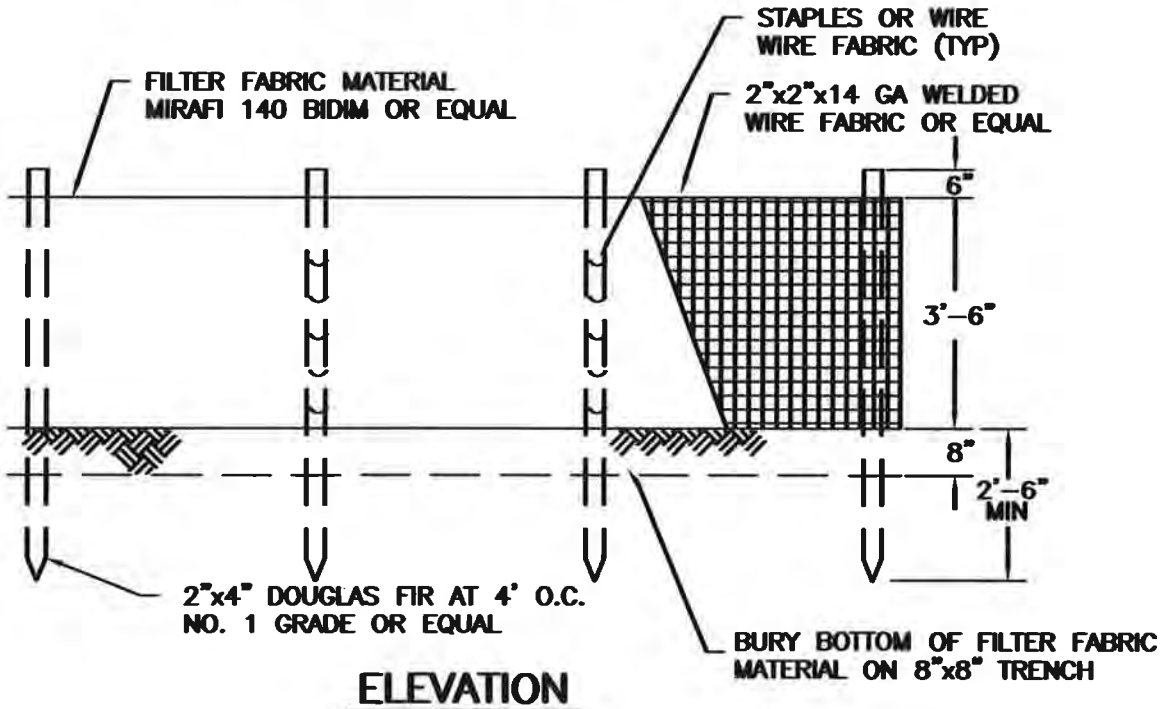


## ELEVATION

CITY OF GRANITE FALLS

**SILTATION FENCE DETAIL**

APPROVED: [signature]

DATE: 10/18/2016

DWG. NO.
SILT-FENC

L:\GrFalls\15484 PW Stds\Misc Dt\SILT-FENC.dwg, 10/18/2016 4:29 PM, RUSSELL HORITA

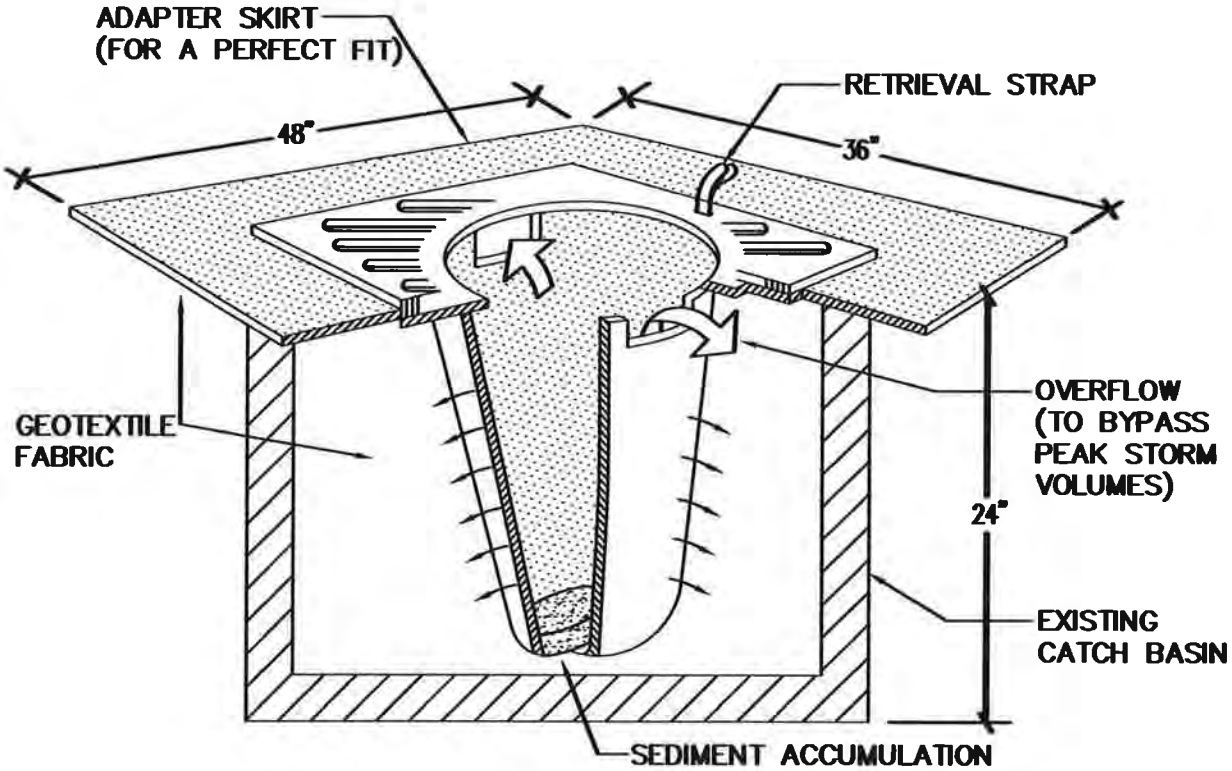


PROVIDE CATCH BASIN SEDIMENT PROTECTION WITH
STREAMGUARD BASIN INSERT #3003, FROM FOSS
ENVIRONMENTAL OR APPROVED EQUAL
7440 W. MARGINAL WAY S.
SEATTLE, WA 98108-4141
PHONE: 1-800-909-3677

CITY OF GRANITE FALLS

**STORM DRAIN INLET PROTECTION DETAIL**

APPROVED: Warren W. Perkins

DATE: 10/18/2016

DWG. NO. SD-IPD

L:\GrFalls\15484 PW Stds\Misc Dtl\SD-IPD.dwg, 10/18/2016 4:29 PM, RUSSELL HORITA

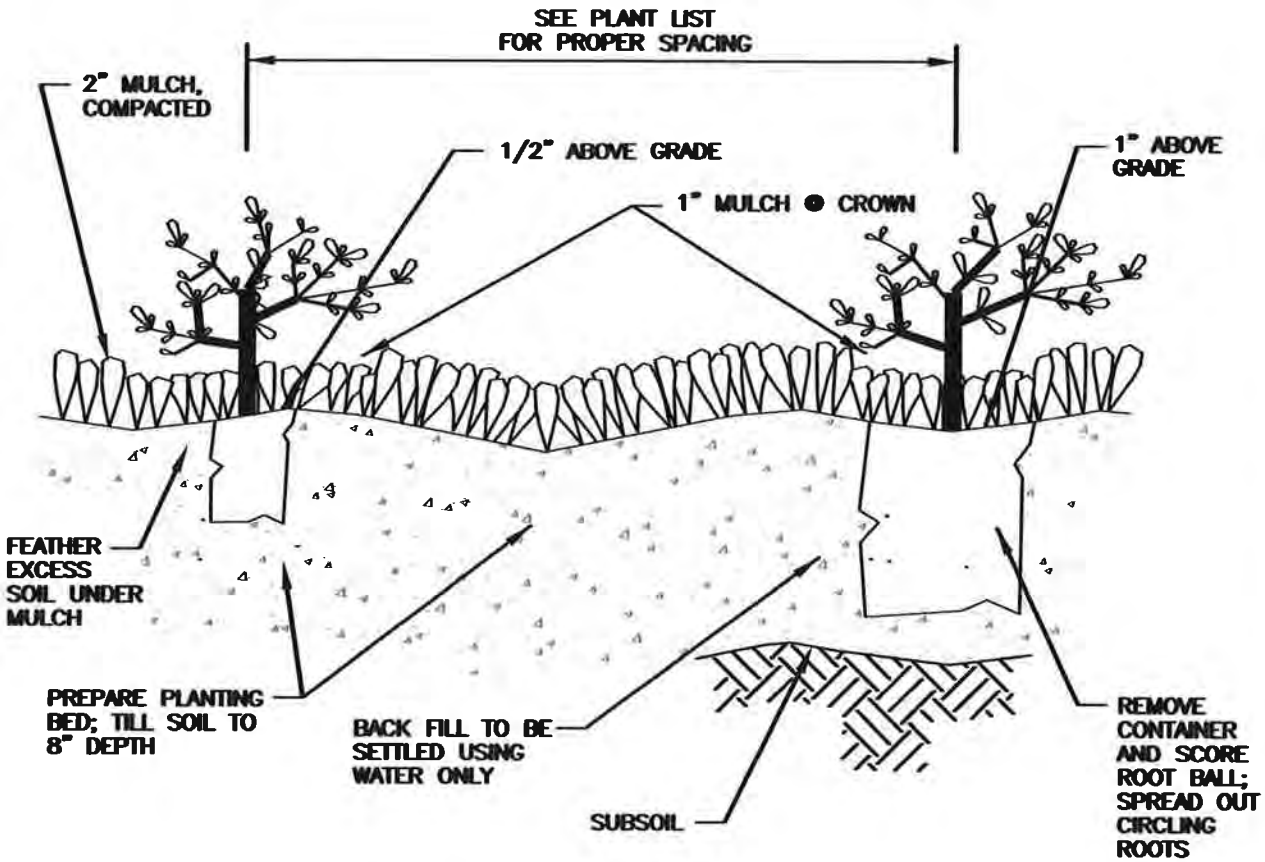


**LESS THAN 1 GALLON CONTAINER**
**(PLANTED AFTER MULCH)**

**1 GALLON CONTAINER AND LARGER**
**(PLANTED BEFORE MULCH)**

# CITY OF GRANITE FALLS
## GROUND COVER PLANTING

APPROVED: [signature]

DATE: 10/18/2016

DWG. NO.
PLNT-DET

L:\GrFalls\15484 PW Stds\Misc Dt\PLNT-DET.dwg, 10/18/2016 4:29 PM, RUSSELL HORITA

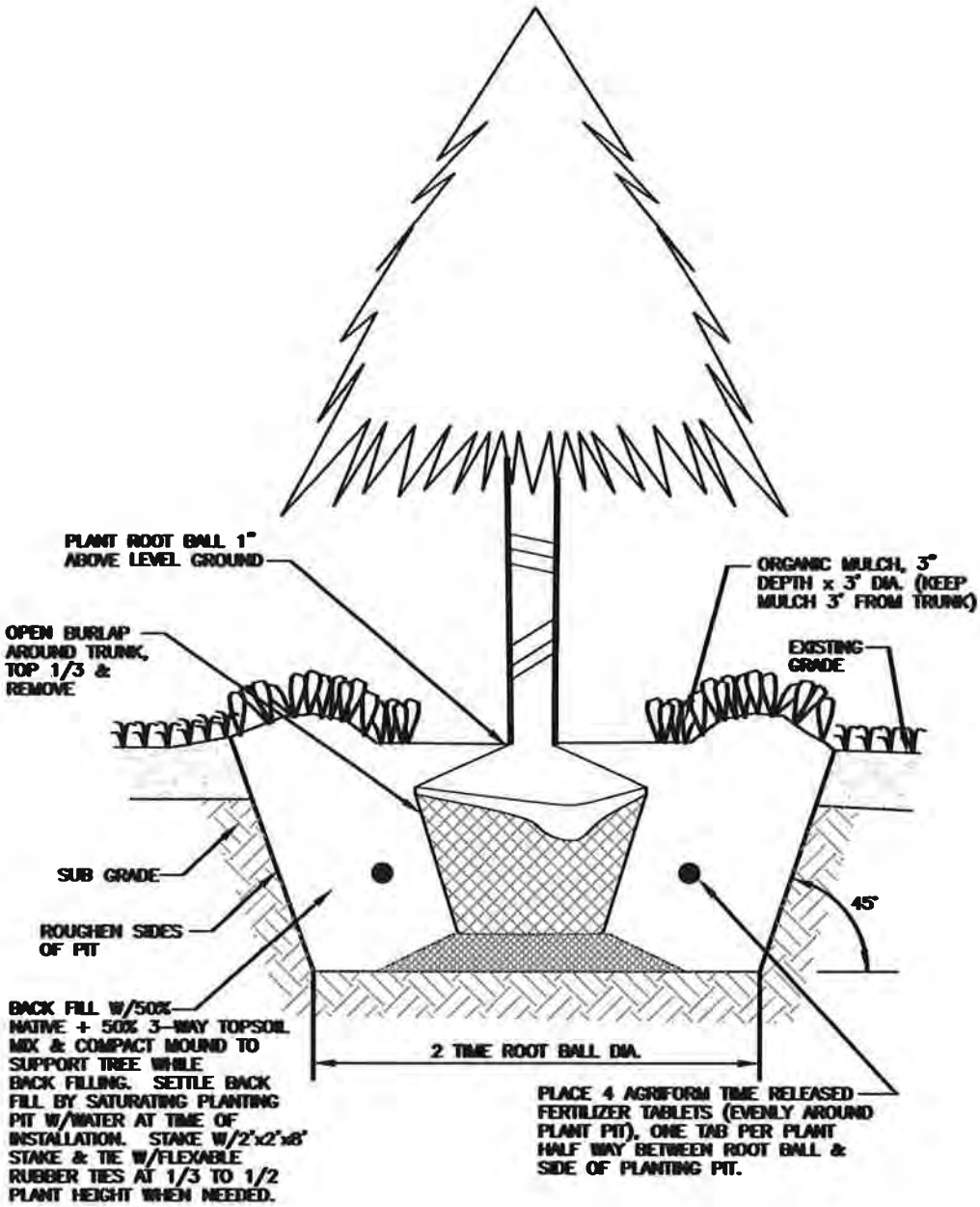


CITY OF GRANITE FALLS

**BALL & BURLAP PLANTING**

APPROVED: Warren Parkins

DATE: 10/18/2016

DWG. NO. PLNT-DET-REV

L:\GrFalls\15484 PW Stds\Misc Dt\PLNT-DET-rev.dwg, 10/18/2016 4:30 PM, RUSSELL HORITA

**NOTE:**

FOR CONTAINER STOCK, REMOVE ROOT BALL FROM CONTAINER & SCORE ON 4 SIDES PRIOR TO SETTING IN PLANTING PIT.

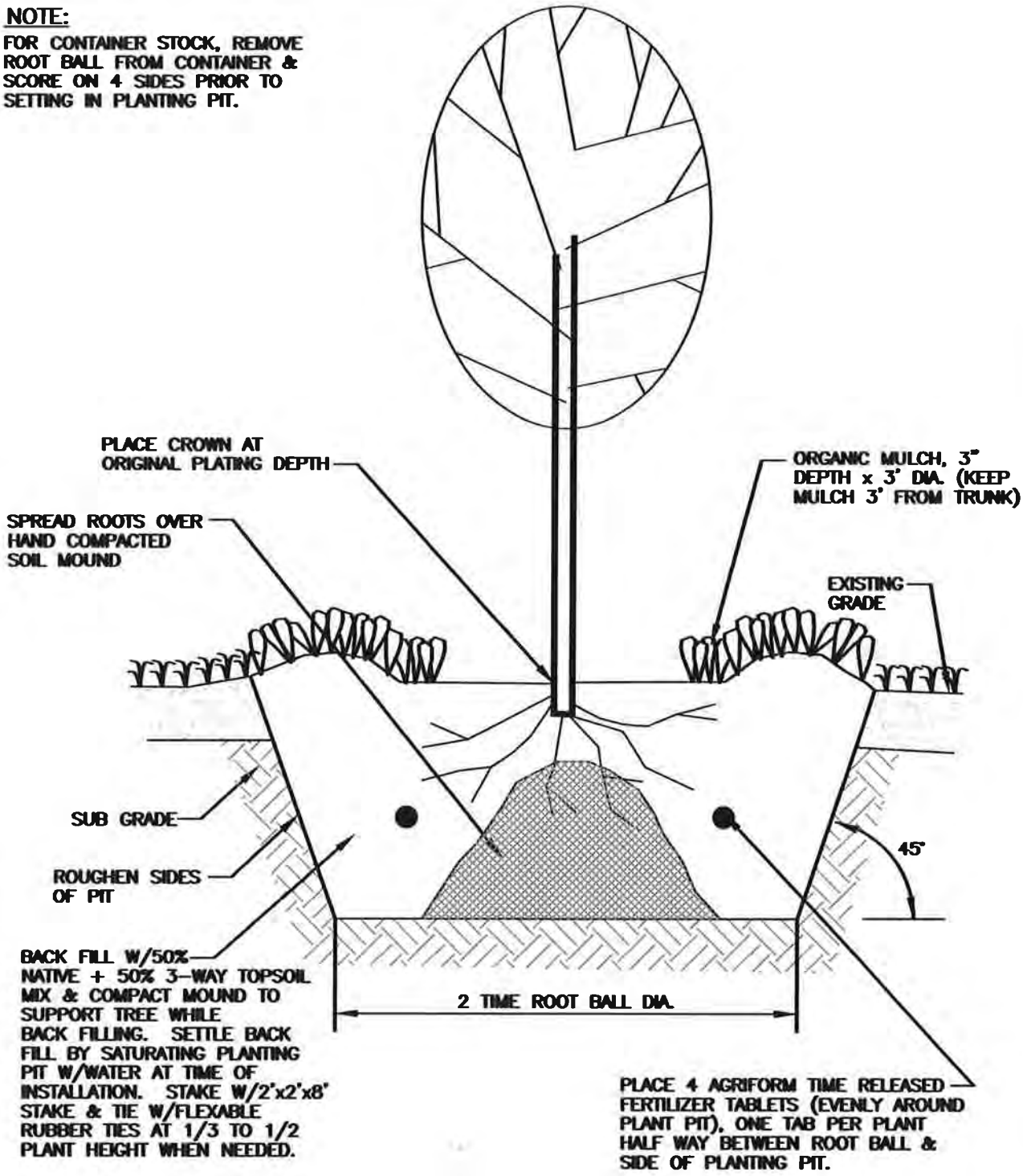


CITY OF GRANITE FALLS

**BARE ROOT/CAN STOCK PLANTING DETAIL**

APPROVED: Warren W. Parks

DATE: 10/18/2016

DWG. NO. PLNT-DET-2

L:\GrFalls\15484 PW Stds\Misc Dt\PLNT-DET-2.dwg, 10/18/2016 4:30 PM, RUSSELL HORITA

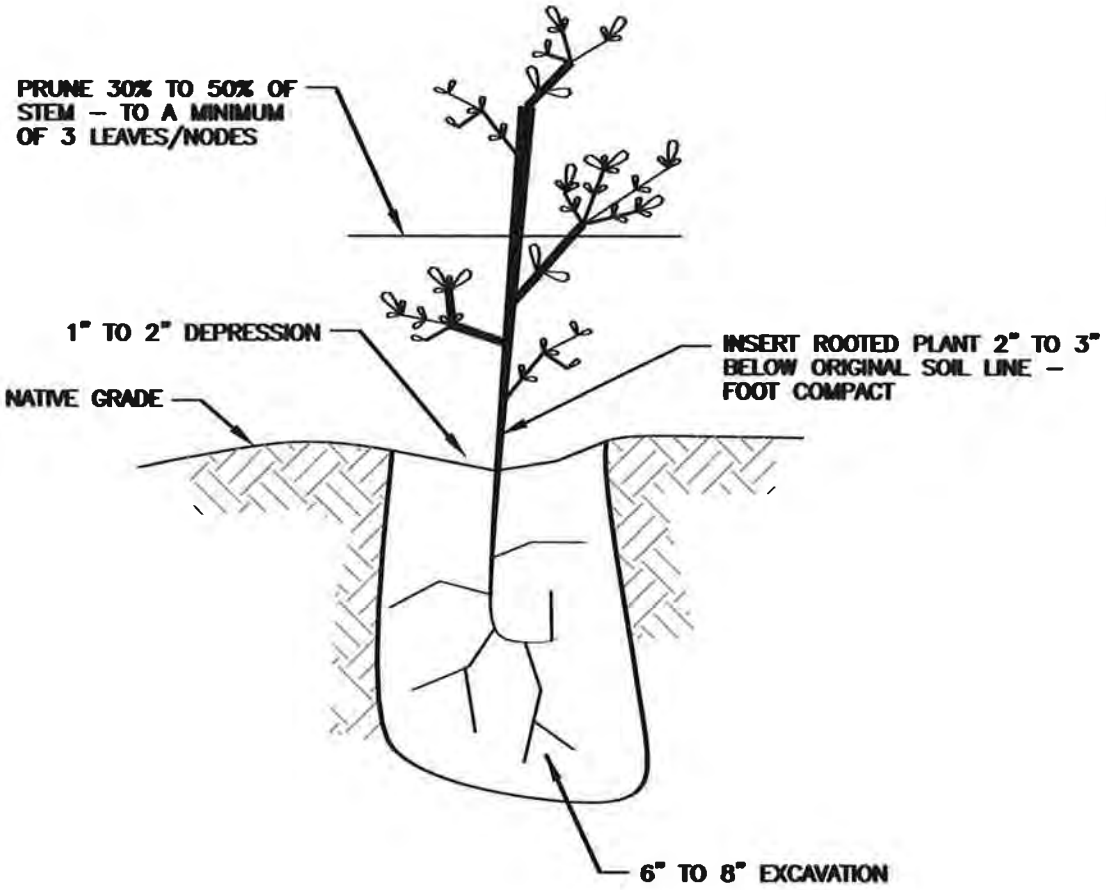


**NOTES:**

1. NO TOPSOIL
2. NO FERTILIZER

CITY OF GRANITE FALLS

**ROOTED CUTTING/OFFSET SEEDLING DETAIL**

APPROVED: Warren W Perkins

DATE: 10/18/2016

DWG. NO. PLNT-DET-2

L:\GrFalls\15484 PW Stds\Misc Dtl\PLNT-DET-2.dwg, 11/9/2016 4:41 PM, WARREN PERKINS

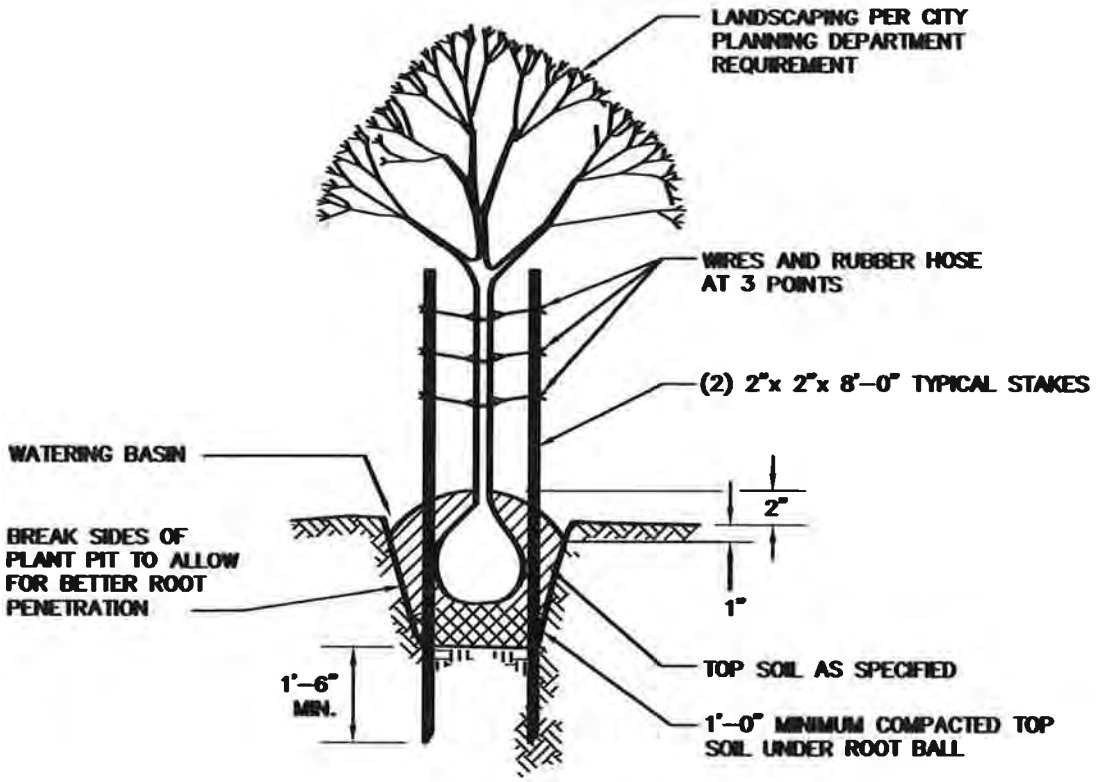


**NOTES:**

1. PLANT ALL TREES ONE INCH HIGHER THAN LEVEL AT WHICH GROWN IN NURSERY
2. TAKE CARE TO AVOID ROOTS WITH STAKES
3. PLANT PIT 3'-0" ø OR 1'-0" LARGER THAN ROOT SPREAD, WHICHEVER IS GREATER.

CITY OF GRANITE FALLS

**STREET TREE PLANTING AND STAKING DETAIL**

APPROVED: Warren W Parks

DATE: 10/18/2016

DWG. NO. LSCP-1

L:\GrFalls\15484 PW Stds\Misc Dt\LSCP-1.dwg, 10/18/2016 4:31 PM, RUSSELL HORITA