CITY OF GRANITE FALLS

SNOHOMISH COUNTY, WASHINGTON

PUBLIC WORKS STANDARDS

GRANITE FALLS

APRIL 2008

PREPARED BY: **GRAY & OSBORNE, INC.**
701 DEXTER AVENUE NORTH, SUITE 200
SEATTLE, WASHINGTON 98109
G&O #06761

TABLE OF CONTENTS

CHAPTER 1 INTRODUCTION 1-1

CHAPTER 2 PERMITS 2-1
2.1 Permit Process 2-1
2.2 Deviations 2-1

CHAPTER 3 PUBLIC WORKS CONSIDERATION 3-1
3.1 Bonding 3-1
3.2 Hold Harmless Clause 3-1
3.3 Developer's Public Liability & Property Damage Insurance 3-2
3.4 Compensation & Employer's Liability Insurance 3-4
3.5 Non-Interference 3-5
3.6 Work Standards 3-5

CHAPTER 4 GENERAL REQUIREMENTS 4-1
4.1 Survey Staking 4-1
4.2 Easements 4-2
4.3 Utility Trench Excavation 4-2
4.4 Pipe Bedding 4-3
4.5 Backfilling 4-3
4.6 Inspection 4-4
4.7 As-Built Drawings 4-5
4.8 Developer Agreement Requirements 4-6
4.9 Acceptance of Improvements 4-6
4.10 Finishing and Cleanup 4-7
4.11 Final Acceptance 4-8
4.12 General Notes (Street Construction) 4-8
4.13 General Notes (Storm Drain Construction) 4-9

CHAPTER 5 STREET AND ASPHALT CONCRETE PATH AND/OR BIKEWAY STANDARDS 5-1
5.1 General Considerations 5-1
5.2 Streets 5-1
5.3 Design Standards 5-5
5.4 Street Names 5-7
5.5 Signing 5-8
5.6 Right-of-Way 5-8
5.7 Street Frontage Improvements 5-8
5.8 Offsite Improvements 5-9
5.9 Private Streets 5-9
5.10 Cul-De-Sac 5-11
5.11 Temporary Dead Ends 5-11

5.12 Intersections 5-11
5.13 Half Streets 5-12
5.14 Driveways 5-12
5.15 Sight Obstruction 5-16
5.16 Subgrade Preparation 5-17
5.17 Crushed Surfacing (Base and Top Course) 5-18
5.18 Surfacing Requirements 5-18
5.19 Temporary Street Patching 5-19
5.20 Trench Backfill and Restoration 5-20
5.21 Material and Construction Testing 5-21
5.22 Sidewalks, Curbs and Gutters 5-23
5.23 Illumination 5-26
5.24 Signals 5-27
5.25 Roadside Features 5-27
5.26 Parking Lots 5-33
5.27 Utilities 5-33
5.28 Asphalt Concrete Pedestrian Paths and/or Bikeways 5-35

CHAPTER 6 STORM DRAINAGE STANDARDS 6-1
6.1 General 6-1
6.2 Design Standards 6-1
6.3 Conveyance 6-3
6.4 Connections 6-3
6.5 Street Patching and Restoration 6-4
6.6 Cleaning and Testing 6-4
6.7 Inspection 6-4

CHAPTER 7 SANITARY SEWER STANDARDS 7-1
7.1 General 7-1
7.2 Design Standards 7-1
7.3 General Requirements 7-3
7.4 Materials 7-6
7.5 Testing Gravity Sewers for Acceptance 7-13
7.6 Video Taping 7-17
7.7 State Highway Crossings 7-17
7.8 Street Patching and Restoration 7-18
7.9 Erosion Control 7-18
7.10 Adjustment of New and Existing Utility Structures to Grade 7-19
7.11 Sanitary Sewer Lift Stations – Supplemental Standards 7-21

CHAPTER 8 WATER SYSTEM STANDARDS 8-1
8.1 General 8-1
8.2 Design Standards 8-1
8.3 General Requirements 8-3
8.4 Materials 8-6

8.5 Water Pipe Testing & Disinfecting 8-13
8.6 Backflow Prevention and Sprinkler Systems 8-15
8.7 Service Connections 8-16
8.8 1-1/2-Inch and Larger Meters 8-17

CHAPTER 9 MISCELLANEOUS UTILITY SERVICES AND ADDITIONAL DEVELOPMENT REQUIREMENTS 9-1
9.1 General 9-1
9.2 Utility Services 9-1
9.3 Street Lighting 9-1
9.4 Cable Television 9-1
9.5 Street Name Traffic Signs 9-1
9.6 Landscaping 9-2

LIST OF TABLES

No. Table Page

5-1 Minimum Street Design Standards 5-6
5-2 Design Values for Roads 5-7

ATTACHED DOCUMENTS
Developer Agreements
Plan Checklist
Traffic Impact Analysis Guidelines
Snohomish County Traffic Study Requirements
Performance Bond
Assignment of Funds in Lieu of Performance Bond
Maintenance Bond
Surety Acknowledgement
Corporate Acknowledgement
Assignment of Funds in Lieu of Maintenance Bond
Easement for Utilities
Bill of Sale
Affidavit of No Liens
Agreement for Inspection and Maintenance of Privately Maintained Facilities

DRAWING DETAILS

LIST OF MISCELLANEOUS DETAILS

TITLE OF DRAWING

Miscellaneous Roadway Details:

Major Arterial Section
Minor Arterial Section
Collector Street Section
Local Access Street Section
Alley Section
Trench Pavement Restoration Detail
Poured Monument in Place Detail
Surface Monument Detail
Sight Obstruction Detail
Sight Distance Continued Detail (2 pages)
Sidewalk without Planting Strip Detail
Sidewalk with Planting Strip Detail
Cement Concrete Driveway without Planter Detail
Cement Concrete Driveway with Planter Detail
Curb Ramp and Texture Detail (2 pages)
Concrete Curb and Gutter Detail
Turn Arrow Details
Pavement Marking Details
Parking Space Marking Details
Mailbox (Placement) Detail
Rock Wall Detail
Manhole or Catch Basin (Type II), Grade Adjustment Detail
Valve Box Detail
Speed Hump; Design, Pavement Marking and Signing
Alternative Fire Apparatus Access Turnaround

Miscellaneous Storm Sewer Details:

Storm Drain Pipe Trench Section Detail (Rigid Pipe)
Catch Basin, Type I, Detail
Catch Basin, Type II, Detail (with Flow Restrictor if Applicable)
Catch Basin Frame and Grate Detail
Riprap and Energy Dissipation for Ditch Detail
New Ditch Construction Detail
Manhole or Catch Basin (Type II) Grade Adjustment Detail

Miscellaneous Sanitary Sewer Details:

Typical Precast Manhole Detail
Typical Manhole Plan (View) Detail
Typical Shallow Precast Manhole Detail
Typical Saddle Manhole Detail
Outside Drop Manhole Detail
Inside Drop Manhole Detail
Manhole Frame and Cover Detail

LIST OF MISCELLANEOUS DETAILS

TITLE OF DRAWING

Miscellaneous Sanitary Sewer Details:

Manhole Frame Collar Detail
Polypropylene Ladder and Manhole Steps Detail
Force Main Discharge Manhole Detail
Sanitary Sewer Trench Section for PVC Pipe Detail
Sanitary Sewer Trench Section for DI Pipe Detail
Pressure Line and Force Main Typical Trench Section Detail
Typical Side Sewer Detail (within New Development)
Typical Side Sewer Service (within Existing Right-of-Way)
Standing Side Sewer
Roof Structure for Electrical Enclosure Detail
Air and Vacuum Release Assembly (Sanitary) Detail
Grease Interceptor Detail

Miscellaneous Water System Details:

Water Main Depth Requirement Detail
Water Main Trench Section Detail
Typical Utility Crossing Detail
Concrete Thrust Block
Thrust Block Detail
Thrust Restraint for Ductile Iron Pipe
Anchor Block Detail
Wet Tap Connection Detail
Cut In Connection Detail
Fire Hydrant Installation
Fire Hydrant Installation, Curb, Gutter and Sidewalk
Fire Hydrant Relocation
Fire Hydrant Location (in cut or fill section) Detail
Fire Hydrant Guard Post
1” and smaller Water Service Detail (2 pages)
1-1/2" and 2" Water Service Detail
Meter and Meter Vault Assembly (3" thru 10") Detail (2 pages)
2" Blow-Off Assembly Detail
Permanent End-Line Blow-Off Assembly
Air and Vacuum Release Assembly Detail
Water Sampling Station Detail (2 pages)
Valve Box Adjustment Detail
Double Check Detector Backflow Prevention Assembly

LIST OF MISCELLANEOUS DETAILS

TITLE OF DRAWING

Miscellaneous Water System Details:

Pressure Reducing Station Detail (2 Pages)
Valve Extension Detail
Reduced Pressure Backflow Assembly 3/4" – 2" Detail
Reduced Pressure Backflow Assembly >3" Detail
Individual Double Check Detector Assembly Detail
Fire Line Connection

Miscellaneous Details:

Removable Bollard Detail
Type III Barricade - for Future Extended Roadway
Swing Gate and Fence Detail
Straw Bale Dam Detail
Siltation Silt Fence Detail
Storm Drain Inlet Protection Detail
Street Tree Planting and Staking Detail
Ground Cover Planting Detail
Ball & Burlap Planting Detail
Rooted Cutting/Offset/Seedling Detail
Bare Root/Can Stock Planting Detail

CHAPTER 1

INTRODUCTION

These standards shall apply to all improvements within the public right-of-way and/or public easements, to all improvements required within the proposed public right-of-way of new subdivisions, for all improvements intended for ownership, operations or maintenance by the City and for all other improvements (on or offsite) for which the City Code requires approval from the City Administrator and/or City Planning Commission and/or the City Council. These standards are intended as guidelines for designers and developers in preparing their plans and for the City in reviewing plans. Where minimum values are stated, greater values should be used whenever practical; where maximum values are stated, lesser values should be used where practical. The developer/proponent is however cautioned that higher standards and/or additional studies and/or environmental mitigation measures may, and will, in all likelihood, be imposed by the City when developing on, in, near, adjacent, or tributary to sensitive areas to include, but not be limited to, steep embankments, creeks, ponds, lakes, certain wildlife habitat, unstable soils, etc.

Alternate design standards will be accepted when it can be shown, to the satisfaction of the City, that such alternate standards will provide a design equal to or superior to that specified. In evaluating the alternate design, the City shall consider appearance, durability, ease of maintenance, public safety and other appropriate factors.

Any improvements not specifically covered herein by these Standards must meet or exceed the current version of the Standard Specification for Road, Bridge & Municipal Construction, State of Washington, and current amendments thereto, revised as to form to make reference to Local Governments. Said specifications shall be referred to hereafter as the "Standard Specifications".

Where improvements are not covered by these details nor by the Standard Specifications nor by the standard details, the City will be the sole judge in establishing appropriate standards. Where these "standards" conflict with any existing City ordinances or discrepancies exist within the body of this text, the higher "standards" shall be utilized as determined by the City Administrator.

Plans for major improvements in the public right-of-way or within public easements, or improvements to be "deeded" or "gifted" to the City, shall bear an approval signature from the City.

The designer shall submit calculations or other appropriate materials supporting the design of utilities, pavements and storm drainage facilities. The designer shall submit

calculations for structures and other designs when requested by the City Engineer and/or Building Official.

1. Exclusions:

   (1) A one time enlargement of less than 800 square feet of total footprint on any parcel of property, or, a one-time net increase of less than 25% of the total aggregate area of the existing footprint(s) of building(s) on the site, whichever is less.

   (2) An individual single family residence.

   (3) Development resulting in additions, alterations, or repairs not exceeding $40,000 over a 2-year period

2. Definitions (As used herein):

   (a) "City": City of Granite Falls, Washington, Snohomish County, a municipal corporation, existing under and by virtue of the laws of the State of Washington. Actions designated as taken by the City are the acts of the Council acting through the Mayor.

   (b) "City Public Works Director" means the City's duly appointed City Public Works Director, or in his absence, the City Mayor.

   (c) "Contract Documents": The contract documents shall consist of the following and in case of conflicting provisions, the first mention shall have precedence:

      (1) Developers Agreement
      (2) City Public Works Standards
      (3) Other Applicable City Municipal Codes
      (4) City Right-of-Way Use Permit
      (5) City Fill and Grade Permit
      (6) WDOE Stormwater Permit (site larger than 1 acre)
      (7) Plans
      (8) Standard Details (WSDOT Specifications)
      (9) SEPA Determination (if required)

      These documents shall form the Contract.

   (d) "Contractor" means the Developer's contractor or subcontractor.

(e) "Developer": The party having an agreement with the City to cause the installation of certain improvements, to become a part of the City's utility and/or roadway system upon completion and acceptance. The term shall also include the Developer's contractor employed to do the work or the Contractor's employees.

(f) "Development" shall mean the construction, reconstruction, conversion, structural alteration, relocation, enlargement, or change in use of any structure or property, or any project that will increase vehicle trips per day or any project which negatively impacts the service level, safety, or operational efficiency of serving roads.

(g) "Engineer" means the City's Engineer, whether a staff engineer or consultant.

(h) "Maintenance Bond" means a bond furnished by the Developer and written by a corporate body qualified to write surety in the State of Washington, guaranteeing that the Developer will repair any defects found in the work within the time period as further identified herein.

(i) "Mayor" means mayor of the City of Granite Falls or his/her authorized representative.

(j) "Performance Bond" means a bond furnished by the Developer and written by a corporate body qualified to write surety in the State of Washington, guaranteeing that the work will be completed in accordance with the plans and specifications.

(k) "Plans" mean drawings, including reproductions thereof, of the work to be done as an extension to the City's utility or road network system, prepared by an Engineer licensed in the State of Washington.

(l) "Operations and Maintenance Supervisor" means the City's utilities superintendent, or operations and maintenance supervisor, or public works director.

(m) "Specifications" means the directions, provisions, and requirements designated by an Engineer licensed in the State of Washington for the prescribed work.

(n) "Work": The labor or materials or both, superintendence, equipment, transportation, and other facilities necessary to complete the Contract.

3. Developer to be Informed: The Developer is expected to be fully informed regarding the nature, quality, and the extent of the work to be done, and, if in doubt, to secure specific instructions from the City.

4. Authority of Mayor: The Mayor or his authorized representative shall have the authority to stop work whenever, in his/her opinion, the same shall be necessary to insure compliance with the plans and specifications, and shall have authority to reject work and materials which do not so conform and to decide questions which may arise in the execution of the work.

5. Authority of the City Public Works Director: The City Public Works Director or his/her authorized representative shall have the authority to determine the amount, quality, acceptability and fitness of the several kinds of work, material and equipment and to decide all questions relative to the classification of materials and the fulfillment of this Contract, and to reject or condemn all work or material which does not conform to the terms of this Contract. The City Public Works Director decision in all matters is the decision of the City, and can only be changed by the City. Moreover, the City has not so delegated, and the City Public Works Director or his/her authorized representative(s) does (do) not purport to be a safety expert, is not so engaged in that capacity under this Contract, and has neither the authority nor the responsibility to enforce construction safety laws, rules, regulations or procedures, or to order the stoppage of work for claimed violations thereof. The furnishing by the City of resident project representation and/or inspection shall not be construed by the Contractor or Development that the City is responsible for the identification or enforcement of such laws, rules or regulations.

6. Payment for City Services: The Developer shall be responsible for promptly reimbursing the City for all costs and expenses incurred by the City in the pursuit of project submittal, review, approval, and construction. These costs include, but are not limited to, the utilization of staff and "other" outside consultants as may be necessitated to adequately review and inspect construction of the project(s). All legal, administrative, and engineering fees for

project review, meetings, approvals, site visits, construction inspection, etc., shall be subject to prompt reimbursement. The Developer is cautioned that project approval (City acceptance) and occupancy permits will be denied until all bills are paid in full.

CHAPTER 2

PERMITS

2.1 PERMIT PROCESS

No person, firm or corporation shall commence work on the construction, alteration or repair of any facility located either in the public right-of-way or a public easement without any necessary permit(s) first having been obtained from the City.

The City may require, at their discretion, the filing of any other information when in their opinion such information is necessary to properly enforce the provisions of this ordinance.

No permit shall be issued until the proposed work has been approved by the appropriate official. Adjudication of disagreements regarding approvals shall be made by the Mayor or their designee and his decision shall be final.

No plan shall be approved nor a permit issued where it appears that the proposed work, or any part thereof, conflicts with the provisions of this ordinance or any other ordinance of the City of Granite Falls, nor shall issuance of a permit be construed as a waiver of the Zoning Ordinance or other ordinance requirements concerning the plan.

A fee of an amount as designated by City code shall accompany all applications for permits.

2.2 DEVIATIONS

These Standards represent appropriate practice under most conditions, based on past experience in Granite Falls and other jurisdictions. They are intended to provide facilities that are safe and appropriate for use in Granite Falls. These Standards are not intended to limit the introduction of new ideas. Situations will arise where alternatives to these Standards may better accommodate existing conditions, overcome adverse topography or allow for more cost-effective solutions without adversely affecting safety, operations, maintenance or aesthetics. As such deviations may be approved only under special circumstances, when such deviation is warranted by unique characteristics of the site or the applicant can clearly show that a deviation will result in an equal or superior product in a cost-effective manner.

Accordingly, requests for deviations from these Standards will be considered by the City Engineer. Such requests must be submitted in writing and include supporting information demonstrating compliance with the following criteria:

- The deviation will achieve the intended result with a comparable or superior design and quality of improvement;
- The deviation will not adversely affect safety, or operations;
- The deviation will not adversely affect maintenance and its associated cost; and
- The deviation will not adversely affect aesthetic appearance.

The need for and timing of a deviation from these standards may not be predictable. Requests should be submitted as soon as the need becomes known. Deviations that affect engineering design, to the extent they are known, must be decided prior to submittal of construction plans. This will prevent wasted effort in the preparation of plans with non-standard features that cannot be approved. Any deviation request concerning a provision of the Uniform Fire Code requires concurrence by Fire District 17. Documentation of concurrence by the Fire District must be submitted with the request.

The City Engineer reserves the right to approve or deny a deviation from these Standards at any time, in the interest of public health, safety and welfare. In accordance with Granite Falls Municipal Code 19.4.030E, the applicant may appeal an administrative determination of the City Engineer denying a requested deviation from these Standards to a hearing examiner appointed by the Mayor.

CHAPTER 3

PUBLIC WORKS CONSIDERATIONS

3.1 BONDING

Developers and contracts performing work within the public right-of-way or publicly owned easement(s) shall be prepared to satisfy the following two bonding requirements. The City will accept an assignment of funds as bonds.

A. Furnishing a performance bond that shall be conditioned upon faithful completion of that portion of the work performed pursuant to the permit which will require completion by the City should the permittee or his contractor default. The amount of such bond shall be 150 percent of the amount estimated for work within the existing right-of-way. This performance bond shall be posted as a requirement for receiving a right-of-way permit.

B. Furnishing a performance bond that shall be conditioned upon faithful completion of that portion of the work performed pursuant to the permit which will require completion by the City should the permittee or his contractor default. The amount of such bond shall be 150 percent of the value of the incomplete improvements that are to be dedicated to the City. The City engineer shall review and provide approval, as may be applicable of the submitted amount. The type of work covered in this bond may include, for example, the final lift of asphalt on a roadway. Bonding for the final lift would allow the developer to receive final plat prior to completing the final lift.

C. Furnishing a Maintenance Bond. All work shall be guaranteed by the Contractor for a 2-year period from the time of inspection and final approval of the construction by the City. The maintenance bond shall be equal to 15 percent of the total cost of the improvements.

3.2 HOLD HARMLESS CLAUSE

The Developer shall indemnify and hold harmless the City and the City Engineer, and their agents and employees as specified in the Developer Agreement, from and against all claims damages, losses, and expenses, including attorney's fees, arising out of or resulting from the performance of the work, and shall, after reasonable notice, defend and pay the expense of defending any suit and will pay any judgment, provided that any such claim, damage, loss, or expense (1) is attributable to bodily injury, sickness, disease, or death, or to injury or destruction of tangible property (other than the work itself), including the loss of use resulting

therefrom, and (2) is caused in whole or in part by any negligent act or omission or by any other action giving rise to strict liability of the Developer, any subcontractor, anyone directly or indirectly employed by any of them, or anyone for whose acts any of them may be liable, regardless of whether or not it is caused in part by a party indemnified hereunder.

In any and all claims against the City or City Engineer, or any of their agents or employees, by any employee of the Developer, any contractor or subcontractor, anyone directly or indirectly employed by any of them, or anyone for whose acts any of them may be liable, the indemnification obligation under this article shall not be limited in any way by any limitation on the amount or type of damages or compensation under workman's compensation acts, disability benefit acts, or other employee's benefit acts.

The obligations of the Developer under this article shall not include the sole negligence of the City or the City Engineer.

3.3 DEVELOPER'S PUBLIC LIABILITY & PROPERTY DAMAGE INSURANCE

The Developer shall not commence work until he has furnished evidence (in duplicate copy) of insurance required hereunder, and such insurance has been approved by the City Attorney; nor shall the Developer allow any contractor or subcontractor to commence work on his contract or subcontract until the same insurance requirements have been complied with by such contractor or subcontractor. Approval of the insurance by the City Attorney shall not relieve or decrease the liability of the Developer thereby.

Companies writing the insurance under this article shall be licensed to do business in the State of Washington or be permitted to do business under the Surplus Line Law of the State of Washington.

The Developer shall maintain, during the life of the Contract, Comprehensive General and Automobile Liability Insurance, as detailed herein. The insurance shall include, as Additional Named Insured, the City. All insurance policies shall be endorsed to provide that the policy shall not be canceled or reduced in coverage until after ten (10) days prior written notice, as evidenced by return receipt of registered letter has been given to the City.

Comprehensive General Bodily Injury and Property Damage Insurance shall include:

a. Premises & Operations;
b. Developer's Protective Liability;

c. Products Liability, including Completed Operations Coverage
d. Contractual Liability
e. Broad Form Property Damage;

Comprehensive Automobile Bodily Injury and Property Damage Insurance shall include:

a. All owned automobiles;
a. Non-owned automobiles;
b. Hired automobiles.

The insurance coverage's listed above shall protect the Developer from claims for damages for bodily injury, including death resulting therefrom, as well as claims for property damage, which may arise from operations under this contract, whether such operations be by himself or by any subcontractor or by anyone directly employed by either of them, it being understood that it is the Developer's obligation to enforce the requirements of this article as respects any contractor or subcontractor.

Comprehensive General and Automobile Liability Insurance shall provide coverage for both bodily injury and property damage, as follows:

A. Comprehensive General and Automobile Bodily Injury Liability Insurance on an occurrence basis of not less than One Million dollars ($1,000,000.00) for bodily injury, sickness or disease, including death resulting therefrom, sustained by each person; and for limits of not less than One Million Dollars ($1,000,000.00) for each occurrence.

B. Comprehensive General Property Damage Liability Insurance on an occurrence as is for limits of not less than One Million Dollars ($1,000,000.00) for damage to or destruction of property, including loss of use thereof, arising from each occurrence, and in an amount of not less than One Million Dollars ($1,000,000.00) in aggregate.

C. Comprehensive Automobile Property Damage Liability Insurance on an occurrence basis for limits of not less than One Million Dollars ($1,000,000.00) for damage to or destruction of property, including loss of use thereof, arising from each occurrence.

D. Comprehensive Liability Insurance shall include the City and the as Additional Named Insured.

E. Comprehensive General Property Damage Liability Insurance shall include liability coverage for damage to or destruction of property of other, including loss of use of property damaged or destroyed, and all other

indirect and consequential damage for which liability exists in connection with such damage to or destruction of property of others, and shall include coverage for:

("X") Injury to or destruction of any property arising out of blasting or explosion;

("C") Injury to or destruction of any property arising out of the collapse of/or structural injury to any building or structure due:

(1) to excavation, including borrowing, filling or backfilling in connection therewith, or tunneling, pile driving, coffer-dam work or caisson work, or

(2) to moving, shoring, underpinning, raising or demolition of any building or structure or removal or rebuilding of any structural support thereof.

("U") 1. Injury to or destruction of wires, conduits, pipes, mains, sewers or other similar property or any apparatus in connection therewith, below the surface of the ground, if such injury or destruction is caused by and occurs during the use of mechanical equipment for the purpose of excavating or drilling, or

2. Injury to or destruction of property at any time resulting therefrom.

There shall be included in the liability insurance, contractual coverage sufficiently broad to insure the provisions of "Hold Harmless Clause".

Nothing contained in these insurance requirements is to be construed as limiting the extent of the Developer's responsibility for payment of damages resulting from his operations under this Contract.

In the event the Developer is required to make corrections on the premises after the work has been inspected and accepted, he shall obtain, at his own expense, and prior to commencement of any corrective work, full insurance coverage, as specified herein.

The Developer shall furnish, upon request by the City, certified copies of the insurance policy or policies within two weeks of the City's request.

3.4 COMPENSATION & EMPLOYER'S LIABILITY INSURANCE

The Developer shall maintain Workmen's Compensation Insurance or, as may be applicable, Maritime Workmen's Insurance, as required by state or federal statute

for all of his employees to be engaged in work on the Project and, in case any such work is sublet, the Developer shall require the contractor or subcontractor similarly to provide Workmen's Compensation Insurance or Maritime Workmen's Insurance for all of the latter's employees to be engaged in such work. The Developer's Labor & Industries account number shall be noted in the Proposal in the space provided.

In the event any class of employees engaged in work at the site of the Project is not covered under the Workmen's Compensation Insurance or Maritime Workmen's Insurance, as required by state and federal statute, the Developer shall maintain and shall cause each contractor or subcontractor to maintain Employer's Liability Insurance with a private insurance company for limits of at least One Hundred Thousand Dollars ($100,000.00), each person, and Three Hundred Thousand Dollars ($300,000.00), each accident, and furnish satisfactory evidence of same.

3.5 NON-INTERFERENCE

The permittee shall be responsible for minimum interference with:

Traffic Routing
Fire Facility Clearance
Adjoining Property
Utility Facilities
Natural Surface Drainage

Prior to construction, these items are to be discussed with the City Public Works Department, and/or City Fire and Police Departments and/or the City Building Inspector, and special provisions may be included in any applicable City Permit(s).

3.6 WORK STANDARDS

All work performed pursuant to a permit issued shall be done in accordance with standards published in the current Standard Specifications for Road, Bridge & Municipal Construction, State of Washington, revised as to form to make reference to Local Governments. The City Engineer may require roadway designs in accordance with the WSDOT Design Manual - Modified Design Level in order to achieve reduced pavement widths.

The following additional standards shall be applicable when pertinent, when specifically cited in the standards or when required by state or federal funding authority:

(a) Local Agency Guidelines, WSDOT, as amended.
(b) Guidelines for Urban Arterial Program, WSDOT, as amended.
(c) American Water Works Association Standards.

(d) Design criteria of federal agencies including the Federal Housing Administration, Department of Housing and Urban Development, the Federal Highway Administration and Department of Transportation.
(e) A Policy on Geometric Design of Highways and Streets, American Association of State Highway and Transportation Officials (AASHTO), 2001, or current edition when adopted by WSDOT.
(f) Standard Specifications for Highway Bridges, adopted by AASHTO, current edition.
(g) U.S. Department of Transportation Manual on Uniform Traffic Control Devices, "MUTCD", as amended and approved by Washington State Department of Transportation, current edition.
(h) Guide for the Development of Bicycle Facilities, adopted by AASHTO, current edition.
(i) Associated Rockery Contractors (ARC), Standard Rock Wall Construction Guidelines.
(j) American Society for Testing and Materials (ASTM).
(k) Illuminating Engineering Society of America (IES) National Standard Practices for Roadway Lighting, RP-8, Current Edition, as modified herein.
(l) The WSDOT/APWA Standard Plans for Road and Bridge Construction, to be referred to as the "Standard Plans or Standard Details," current edition as amended.
(m) WSDOT Design Manual, current edition as amended.
(n) City and County Design Standards for the Construction of Urban and Rural Arterial and Collector Roads, adopted per RCW 35.78.030 and RCW 43.32.020, May 24, 1989, current edition as amended.
(o) Institute of Transportation Engineers, Traffic Engineering Handbook, current edition.
(p) Water System Design Manual, Washington Department of Health (2004).
(q) Criteria for Sewage Works Design, Washington Department of Ecology (1998).

CHAPTER 4

GENERAL REQUIREMENTS

This Chapter presents information that is generally applicable to all work within the existing right-of-way or new development.

4.1 SURVEY STAKING

All surveying and staking shall be performed by an engineering or surveying firm employed by the Developer and capable of performing such work. The engineer or surveyor directing and/or performing such work shall be currently licensed by the State of Washington to perform said tasks. The survey work shall be referenced to NAVD 88 vertical datum and NAD 83/91 horizontal datum.

A preconstruction meeting shall be held with the City prior to commencing staking. All construction staking shall be inspected by the City prior to construction.

The minimum staking of utility systems shall be as follows:

A. Stake centerline alignment every 25 feet with cuts and/or fills to bottom of trench.

B. Stake location of all catch basins/manholes and other fixtures for grade and alignment.

C. Stake location, size and depth of retention/detention facility.

D. Stake finished grade of catch basin/manhole rim elevation and invert elevations of all pipes in catch basins, manholes, and those that daylight.

The minimum staking of streets shall be as follows:

E. Stake centerline alignment every 25 feet (50 feet in tangent sections) with cuts and/or fills to subgrade.

F. Stake top of ballast and top of crushed surfacing at centerline and edge of pavement every 25 feet.

G. Stake top back of curb at a consistent offset for vertical and horizontal alignment.

The minimum staking of storm sewer systems shall be as follows:

A. Stake centerline alignment every 25 feet with cuts and/or fills to the bottom of trench.

B. Stake location of all catch basins/manholes and other fixtures for grade and alignment.

C. Stake location, size, and depth of retention/detention facility.

D. Stake finished grade of catch basin/manhole rim elevation and invert elevations of all pipe in catch basins, manholes, and those that daylight.

The minimum staking of water systems shall be as follows:

A. Provide staking sufficient to satisfy City Public Works Director. In new plat development roadway centerline staking must be readily identifiable.

B. Stake locations of all proposed fire hydrant, blow-off, air-vac, valves, meters, etc.

4.2 EASEMENTS

All public utilities not within the right-of-way shall be located within an easement dedicated to the City. Easements for utilities shall be a minimum of 15 feet wide. Utility easements shall be graded and surfaced sufficient for maintenance access vehicles. Easements for access, as well as utilities, shall be a minimum of 25 feet wide with a minimum of 20-foot paved surface.

4.3 UTILITY TRENCH EXCAVATION

A. Clearing and grubbing where required shall be performed within the easement or public right-of-way as permitted by the City and/or governing agencies. Debris resulting from the clearing and grubbing shall be disposed of by the owner or contractor in accordance with the terms of all applicable permits.

B. Trenches shall be excavated to the line and depth designated by the City to provide a minimum of 36-inches of cover over the pipe. Except for unusual circumstances where approved by the City, the trench sides shall be excavated vertically and the trench width shall be excavated only to such widths as are necessary for adequate working space as allowed by the governing agency and in compliance with all safety requirements of the prevailing agencies. The trench shall be kept free from water until joining is complete. Surface water shall be diverted so as not to enter the trench.

The Contractor shall maintain sufficient pumping equipment on the job to insure that these provisions are carried out.

C. The contractor shall perform all excavation of every description and whatever substance encountered and boulders, rocks, roots and other obstructions shall be entirely removed or cut out to the width of the trench and to a depth 6 inches below storm line grade. Where materials are removed from below the pipeline grade, the trench shall be backfilled to grade with material satisfactory to the City and thoroughly compacted.

D. Trenching and shoring operations shall not proceed more than 100 feet in advance of pipe laying without specific written approval of the City, and shall be in conformance with Washington Industrial Safety and Health Administration (WISHA) and Office of Safety and Health Administration (OSHA) Safety Standard.

E. The bedding course shall be finished to grade with hand tools in such a manner that the pipe will have bearing along the entire length of the barrel. The bell holes shall be excavated with hand tools to sufficient size to facilitate the construction of pipe joints.

4.4 PIPE BEDDING

All utility pipes shall be bedded in conformance with the details in these Standards.

4.5 BACKFILLING

Backfilling and surface restoration shall closely follow installation of pipe so that not more than 100 feet is left exposed during construction hours without approval of the City. Selected material shall be placed and compacted around and under the storm drain by hand tools. Special precautions should be provided to protect the pipe to a point 12 inches above the crown of the pipe. The remaining backfill shall be compacted to 95 percent of the maximum density in traveled areas, 90 percent outside driveway, roadways, road prism, shoulders, parking or other traveled areas. Where governmental agencies other than the City have jurisdiction over roadways, the backfill and compaction shall be done to the satisfaction of the agency having jurisdiction. Typically, trench sections crossing existing roadways, in roadway "prisms" or beneath traffic bearing areas shall be backfilled and compacted with crushed rock. Due to localized conditions, the City may allow/permit the backfill of the trench section with suitable excavated material, as determined by the City. The City may require CDF backfill for utility trenches crossing under roads based upon localized conditions and traffic loading. All excess material shall be loaded and hauled to waste.

4.6 INSPECTION

A. General

The City shall exercise full right of inspection of all excavating, construction, and other invasions of City right-of-way or public easements. The City Public Works Director or designated official shall be notified on the working day prior to commencing any work in the City's right-of-way or public easements. The City Public Works Director and/or his authorized representative is authorized to and may issue immediate Stop Work Orders in the event of noncompliance with this chapter and/or any of the terms and provisions of the permit or permits issued here under.

Timely notification by the developer as noted herein is essential for the City to verify through inspection that the work meets the standard. Failure to notify in time may oblige the City to arrange appropriate sampling and testing after-the-fact, with certification, by a professional engineer. Costs of such testing and certification shall be borne by the developer. At the time that such action is directed by the City Public Works Director, the Public Works Director may prohibit or limit further work on the development until all directed tests have been completed and corrections made to the satisfaction of the Engineer. If necessary the City may take further action as set forth in the Granite Falls Municipal Code (GFMC).

B. Requirements for subdivision, binding site plan, commercial and right-of-way land use inspection.

On all road and drainage facility construction, proposed or in progress, which relates to subdivision, binding site plan, commercial and right-of-way development, control and inspection will be done by the City Engineer. Unless otherwise instructed by the Engineer, construction events, which require monitoring or inspection, are identified as follows:

(1) Preconstruction Conference. Three working days' prior notice. Conference must precede the beginning of construction and include owner, contractor, designing engineer, geotechnical engineer, utilities, and other parties affected. Plan approvals and permits must be in hand prior to the conference.

(2) Clearing and Temporary Erosion/Sedimentation Control. One working day's notice prior to initial site work involving drainage and installation of temporary water retention/detention and siltation control. Such work to be in accordance with the Stormwater Management Manual and the approved plans.

(3) Utility and Storm Drainage Installation. One working day's notice prior to trenching and placing of storm sewers and underground utilities such as sanitary, water, gas, power, telephone, and TV lines.

(4) Utility and Storm Drainage Backfill and Compaction. One working day's notice before backfill and compaction of storm sewers and underground utilities.

(5) Subgrade Completion. One working day's notice at stage that underground utilities and roadway grading are complete, to include placement of gravel base if required. Inspection to include compaction tests and certifications.

(6) Curb and Sidewalk Forming. One working day's notice to verify proper forming and preparation prior to pouring concrete.

(7) Curb and Sidewalk Placement. One working day's notice to check placement of concrete.

(8) Crushed Surfacing Placement. One working day's notice to check placement and compaction of crushed surfacing base course and top course.

(9) Paving. Three working days notice in advance of paving with asphalt or Portland cement concrete.

(10) Structural. Three working days notice prior to each critical stage such as placing foundation piling or footings, placement and assembly of major components, and completion of structure and approaches. Tests and certification requirements will be as directed by the City Engineer.

C. Final Inspection

Prior to final approval of construction, a visual inspection of the job site will be made by the City. Restoration of the area shall be complete with all improvements being restored to their original or superior condition.

4.7 AS-BUILT DRAWINGS

Permittees or their representatives who install systems within, on, or below the City's public rights-of-way or public easements shall furnish the City with accurate drawings, plans and profiles, showing the location and curvature of all underground structures installed, including existing facilities where encountered and abandoned installations. Horizontal locations of utilities are to be referenced to street centerlines, as marked by survey monuments, and shall be accurate to a tolerance of plus or minus one-half (1/2) foot. The depth of such structure may be referenced to the elevation of the finished street above said utility, with depths to the nearest one-tenth foot being shown at a minimum fifty-foot interval along the location of said utility.

Such record drawings shall be submitted to the City within thirty (30) calendar days after completion of the work or prior to final project approval (e.g., final plat or occupancy) whichever comes first. Record drawings shall be stamped, signed and dated by an engineer currently licensed in the State of Washington.

In the event that the permittee or his/her representatives does not have qualified personnel to furnish the record drawings required by this section, he shall advise the City Public Works Superintendent in order that necessary field measurement may be taken during construction for the preparation of record drawings. All costs of such field inspection and measurement, to include the preparation of the record drawings, shall be at the sole expense of the permittee.

Drawing Standards:

Minimum scale - 1" = 50' horizontal; 1" = 5' vertical
Detail scale - Larger as necessary

Record drawings shall be submitted on permanent, stable reproducible mylar with a signature and data, which verifies the "finished" condition of the project. All data as shown on the drawings shall be "fixed line" or ink. Sticky back (glue) reproductions or "sepia" mylars shall not be considered acceptable. Electronic files in the most recent version of “AutoCAD shall be also provided to the City.

The drawings shall be referenced to NAVD 1988 and NAD 83/91 and shall include at a minimum two existing City utility features such as sanitary or storm sewer, manholes, water valves or fire hydrants. Referencing to electrical features such as street lights, telephones or power poles is not acceptable.

4.8 DEVELOPER AGREEMENT REQUIREMENTS

All Contractors, land developers, or others, whether persons or entities, constructing curbs, gutters, storm-drainage systems, streets, water or sewer systems, or additions thereto, to be connected to the right-of-way, storm sewers, sanitary sewer lines and/or water lines of the City of Granite Falls, shall, as a prerequisite to securing approval for the construction of such system, execute a Developer Agreement in the form set forth in the attached documents.

4.9 ACCEPTANCE OF IMPROVEMENTS

The City shall not accept developer constructed improvements incrementally. All aspects of the grading, road, and utility improvements must be complete, clean, inspected, and as-built drawings submitted, prior to City acceptance of improvements and release of performance sureties. Prior to acceptance, all

improvements shall be in good working order, clean, and free of defects including removal of debris, vegetation, and sediment from new utilities. All dedications, easements, or other legal documentation shall be complete and recorded prior to final acceptance of the project improvements.

4.10 FINISHING AND CLEANUP

Before acceptance of utility system construction, all pipes, open ditches, manholes, catch basins, and other appurtenances shall be cleaned of all debris and foreign material. After all other work on this project is completed and before final acceptance, the entire roadway, including the roadbed, planting, sidewalk areas, shoulders, driveways, alley and side street approaches, slopes, ditches, utility trenches, and construction areas shall be neatly finished to the lines, grades and cross sections of a new roadway consistent with the original section, and as hereinafter specified.

Where all or portions of the utility is in undeveloped areas, the entire area which has been disturbed by the construction shall be shaped so that upon completion the area will present a uniform appearance, blending into the contour of the adjacent properties. All other requirements outlined previously shall be met.

Slopes, sidewalk areas, planting areas and roadway shall be smoothed and finished to the required cross section and grade by means of a grading machine insofar as it is possible to do so without damaging existing improvements, trees and shrubs. Machine dressing shall be supplemented by hand work to meet requirements outlined herein, to the satisfaction of the City Inspector and/or the City Engineer.

Upon completion of the cleaning and dressing, the project shall appear uniform in all respects. All graded areas shall be true to line and grade. Where the existing surface is below sidewalk and curb, the area shall be filled and dressed out to the walk. Wherever fill material is required in the planting area, the finished grade shall be elevated to allow for final settlement, but nevertheless, the raised surface shall present a uniform appearance.

All rocks in excess of one (1) inch diameter shall be removed from the entire construction area and shall be disposed of the same as required for other waste material. In no instance shall the rock be thrown onto private property. Overhang on slopes shall be removed and slopes dressed neatly so as to present a uniform, natural, well-sloped surface.

All excavated material at the outer lateral limits of the project shall be removed entirely. Trash of all kinds resulting from clearing and grubbing or grading operations shall be removed and not placed in areas adjacent to the project.

Where machine operations have broken down brush and trees beyond the lateral limits of the project, the Developer and/or Contractor shall remove and dispose of same and restore said disturbed areas at his own expense.

All pavements and oil mat surfaces, whether new or old, shall be thoroughly cleaned. Existing improvements such as Portland cement concrete curbs, curb and gutters, walls, sidewalks, and other facilities, which have been sprayed by the asphalt cement, shall be cleaned to the satisfaction of the City Inspector and/or City Engineer.

Castings for manholes, valves, lamp holes, vaults and other similar installations, which have been covered with the asphalt material, shall be cleaned to the satisfaction of the City.

4.11 FINAL ACCEPTANCE

Prior to final inspection, all pipelines shall be flushed and cleaned and all debris removed. A pipeline "cleaning ball" of the proper diameter for each size of pipe shall be flushed through all storm and sanitary sewer pipelines prior to final inspection. In addition, sanitary and storm sewer lines shall be "videotaped" in their entirety using a remote controlled camera.

The General Notes numbered 1 through 6, as shown and further referenced herein, shall be included or referenced on any plans submitted to the City for construction approval dealing with street design.

4.12 GENERAL NOTES (STREET CONSTRUCTION)

1. All workmanship and materials shall be in accordance with current City of Granite Falls Standards and current amendments thereto and the current State of Washington Standard Specifications for Road, Bridge, and Municipal Construction, and any current amendments thereto, amended as per City Standards.

2. The contractor shall be responsible for all traffic control in accordance with the MUTCD manual. Prior to disruption of any traffic, traffic control plans shall be prepared and submitted to the City for possible approval. No work shall commence until all approved traffic control is in place. Work shall cease when traffic control fails to meet minimum requirements.

3. All curb and gutter, street grades, sidewalk grades, and any other vertical and/or horizontal alignment shall be staked by an engineering or surveying firm capable of performing such work. Such firms shall be currently licensed in the State of Washington to perform such work.

4. Where new asphalt joins existing, the existing asphalt shall be cut to a neat vertical edge and tacked with Asphalt Emulsion type CSS-1 in accordance with the standard specifications. The new asphalt shall be feathered back over existing to provide for a seal at the saw cut location and the joint sealed with grade AR-4000W paving asphalt. A sand blanket shall be applied to the surface to minimize "tracking" of same.

5. Compaction of subgrade, rock, and asphalt shall be in accordance with the WSDOT Standard Specifications.

6. Form and subgrade inspection by the City is required before pouring concrete. A minimum forty-eight hours notice is required to be provided to the Public Works Superintendent for form inspection.

7. See City of Granite Falls Standards for testing and sampling frequencies.

4.13 GENERAL NOTES (PIPELINE CONSTRUCTION)

1. All workmanship and materials shall be in accordance with City of Granite Falls Standards.

2. Comply with all other permits and other requirements by the City of Granite Falls or other governing authority or agency as may be applicable.

3. A preconstruction meeting shall be held with the City prior to the start of construction.

4. All pipelines, manholes, catch basins and valves, and detention or infiltration areas shall be staked for grade and alignment by an engineering or surveying firm capable of performing such work, and currently licensed in the State of Washington to do so.

5. Special structures, oil/water separators and outlet controls shall be installed per plans and manufacturers recommendations.

6. Provide traffic control plan(s) as required in accordance with MUTCD.

7. Call underground locate line 1-800-424-5555 minimum 48 hours prior to any excavations.

8. Where connections require "field verifications", connection points will be exposed by contractor and fittings verified 48 hours prior to distributing shut-down notices.

CHAPTER 5

STREET AND ASPHALT CONCRETE PATHS AND/OR BIKEWAYS STANDARDS

5.1 GENERAL CONSIDERATIONS

A. General

The overall goal of this chapter is to encourage the uniform development of an integrated, fully accessible public transportation system that will facilitate present and future travel demand with minimal environmental impact to the community as a whole.

Development of properties on or tributary to substandard or unsafe (safety issues) roadways may, depending on the size and type of development, be cause for "off-site" improvements to the substandard or unsafe corridors, to include road drainage facilities. The City Engineer shall determine when and if such conditions exist. At a minimum "half street improvements" will be required as a condition of development in and along the entire property as it abuts City rights-of-way. The City shall determine what qualifies as "development."

When new development borders two or more roads with different classifications the development shall take access off the road with the lower classification. In the event that abutting roads have the same classification the access shall be determined based upon existing and projected future traffic so as to minimize impacts on traffic flow. Access onto high volume roads may be denied in the interest of traffic safety or operational requirements.

This chapter provides minimum street design standards as well as minimum design standards for "stand alone" pedestrian and/or bike trails/paths. Higher design and construction standards may be warranted due to localized design and construction parameters.

5.2 STREETS

A. General

All street design and construction must provide for the maximum traffic loading and capacity conditions anticipated based upon existing land use

and zoning. The width and grade of the pavement must conform to specific standards set forth herein for safety and uniformity.

B. Design Standards

The design of streets and roads shall depend upon their type and usage. The design elements of streets shall conform to City standards as set forth herein.

The layout of streets shall provide for the continuation of existing arterial streets in adjoining subdivisions or of their proper projection when adjoining property is not subdivided. Local access streets, which serve primarily to provide access to abutting property, shall be designed to discourage through traffic through the use of traffic calming devices or other City-approved measures. See Table 5-1 Minimum Street Design Standards in Section 5.3.

1. Grade. Street profile grade should conform closely to the natural contour of the land. In some cases, a different grade may be required by the City Engineer. Unless otherwise approved by the City, the minimum profile grade shall be 0.7 percent. Local conditions may, in the opinion of the City's Engineer, require a lesser profile grade in which case (if specifically approved by the City Engineer), the minimum allowable profile grade shall be 0.5 percent. The maximum allowable grade shall be as further specified in the Table 5-1 Minimum Street Design Standards.

2. Width. The pavement and right-of-way width depend upon the street classification. Table 5-1 Minimum Street Design Standards show the minimum widths allowed.

   Street widths shall be measured from face of vertical curb to face of vertical curb on streets with cement concrete curb and gutter, and from centerline of gutter to centerline of gutter or streets "approved" by the City without concrete vertical curb and gutter.

3. The developer is required to retain a licensed geotechnical engineer to make soils tests and to provide engineering recommendations for design of the sub-base and roadway sections based on "in place" soils, depth of "free draining" structural materials, projected pavement loadings, roadway classification, average daily traffic volume, etc.

4. In special circumstances, as may be specifically approved/required by the City Planning Commission and/or City Council, due to local conditions and/or geometric restrictions, paving widths or improvement standards may be required which are different than those specifically listed herein.

5. There shall be no islands in the center of any cul-de-sac without specific approval of the City Council.

6. Streets and lots shall be placed in relationship to natural topography so that grading and filling and/or other alternations of existing condition is minimized. Reserve strips or street plugs controlling access to streets will not be approved unless, in the judgment of the City Engineer, such is necessary for the protection of the public welfare or substantial property rights, and in such cases they will be required. The control and disposal of the land comprising such strips or plugs shall be placed within the jurisdiction of the City.

7. The City intends to promote connectivity of roadways within and between plats. Therefore, if, in the opinion of the City, it is necessary to give access to, or permit future subdivision of adjoining land, streets shall be extended to the boundary of the subdivision and the resulting dead-end street shall be provided with a temporary cul-de-sac. The temporary cul-de-sac shall be appropriately signed as "temporary" and further paved, to include furnishing and installing concrete curbs, gutters and sidewalks and constructed to City standards.

8. Alleys shall be prohibited except when approved by the City and Fire Marshall's office.

9. The street system (in residential subdivisions and short subdivisions) shall be laid out with a minimum number of intersections with other arterial streets. No streets shall intersect at intervals closer than 125 feet, unless, in the judgment of the City Engineer, an exception to this rule would be in the public interest and welfare.

10. Intersecting streets shall be laid out so that blocks between street lines are not more than one thousand three hundred twenty feet in length.

11. Streets shall be laid out so as to intersect as nearly as possible at right angles, and in any event, no street shall intersect with any other street at an angle of less than 60 degrees, without specific written City approval.

12. At a minimum streets shall conform to all requirements of the latest edition of the Uniform Fire Code adopted by the City.

13. All street construction plans shall be submitted to the City and shall include the following required information:

    - Plan and profile;
    - Street name;
    - Centerline bearings;
    - Centerline/baseline stationing;
    - Centerline elevations every 50 feet;
    - Gutterline elevations every 50 feet if not standard crown;
    - Slope shall be in percent;
    - Transverse slope: Two percent standard crown (to be used unless approved/required by City;
    - Longitudinal slope - see design standard table;
    - Horizontal and vertical curves shall be required when a change of centerline grade occurs greater than one percent:

        a. Fifty feet minimum length;
        b. Elevations required at twenty five feet stations and at the P.C., P.I., P.T. and low point or high point;

    - Longitudinal gutterline slope - see design standard table;
    - Road cross sections per City standard detail and including the thickness of the various types of subgrades end pavement;
    - Accurate locations of monuments at all centerline intersections, cul-de-sacs, P.C.'s, P.T.'s, and P.R.C's;
    - Length and width of sidewalks and driveways;
    - The location of all existing fire hydrant within 300 feet of the project shall be indicated;
    - Curb and gutter;
    - Wheelchair ramps;
    - Channelization and Signing:

        a. Lane markers - location and type.
        b. Pavement markings - location and type.
        c. Signs - location and type.

- Dead end/cul-de-sacs (permanent) shall terminate in a circular turnaround having minimum pavement radius of 50 feet, unless otherwise approved in writing by the City Fire Marshall.

All public streets, sidewalks and alleys shall conform as a minimum to one of the herein referenced construction standards and shall be adjusted as necessary to match existing facilities, service the proposed development, and meet the needs of anticipated future development;

All topsoil, organic, and structurally unsuitable soils shall be removed from beneath the proposed street section as located between the outside edge of sidewalks.

14. In addition to the above requirements, street design shall incorporate the following minimum requirements:

    a. All new utility systems such as power, gas, cable TV and telephone shall be buried, except where topography or site conditions prohibit reasonable installation. Design and installation of the system shall be done by the franchised utility company. Design shall be submitted to the City Engineer for review and approval prior to installation;

    b. Street lighting shall be provided in accordance with Snohomish County PUD standards. The system shall be designed to provide a minimum intensity of 0.4-foot candles within the right-of-way (Illumination Engineering Society of North America, RP8 (current version)).

5.3 DESIGN STANDARDS

City streets are divided into major (or principal) arterial, minor (or secondary) arterial, collector arterial, local access streets, and alleys in accordance with regional transportation needs and the functional use each serves. Function is the controlling element for classification and shall govern right-of-way, road width, and road geometrics. The proponent/developer shall request information on the functional classification of existing streets from the City, Public Works Superintendent, or designee. New streets will be classified by the City.

Generally speaking, the functional classification of streets are defined as follows:

- Major arterials are defined as streets connecting two or more arterials together or serving industrial areas.
- Minor arterials are defined as streets serving more than 200 dwelling units or more than 2,000 average daily trips or connect to major arterials.
- Collector arterial streets are defined as streets currently serving or anticipated to serve up to 200 dwelling units or less than 2,000 average daily trips (whichever is less).
- Local access streets currently serving or anticipated to serve in the future up to one hundred (100) dwelling units or less than 1,000 average daily trips (whichever is less).
- Alley is defined as a strip of land dedicated for public use which is 20 feet in width and which is intended to provide driveway access to adjacent properties.

TABLE 5-1

Minimum Street Design Standards

Design Standard	Major Arterial	Minor Arterial	Collector Arterial	Local Access Street	Alley
Min. Right-of-Way	100 feet	75 feet	60 feet	50 feet	20 feet
Utility Easement*	None	None	10 ft. min,. can be split between both sides	10 ft. min., can be split between both sides	None
Min. Pavement Width**	64 feet	40 feet	40 feet	28 feet	20 feet
Parking Lane	None	Both Sides	Both Sides	One Side	None
Min./Max. Grade	0.7% - 8.0%	0.7% - 8.0%	0.7% - 15%	0.7% - 15%	0.7% - 15%
Curb	Vertical Cement Concrete Curb and Gutter both sides	Vertical Cement Concrete Curb and Gutter both sides	Vertical Cement Concrete Curb and Gutter both sides	Vertical Cement Concrete Curb and Gutter both sides	One side if Cross Slope alley. None if "V" section.
Planter Strip**	10 ft. in median plus 4.5 ft. min. both sides	10 ft. in median plus 4.5 ft. min. both sides	4.5 feet minimum both sides	5 feet minimum both sides	None
Sidewalk** (see footnote)	5 feet min. both sides in back of planter strip	5 feet min. both sides in back of planter strip	5 feet min. both sides in back of planter strip	5 feet min. both sides in back of planter strip	None
Cul-de-Sac Radius	N/A	N/A	N/A	50 foot paved bulb radius	N/S
Intersection Curb Radius	30 feet	30 feet	30 feet	25 feet	15 feet

TABLE 5-1 – (continued)

Minimum Street Design Standards

Design Standard	Major Arterial	Minor Arterial	Collector Arterial	Local Access Street	Alley
Design Speed	Per City Direction	30 mph	25 mph	25 mph	15 mph
Stopping Site Distance	Per City Direction	250 feet	200 feet	200 feet	Per City Direction
Access	Controlled. No Direct Lot Access	Residential and Commercial	Residential and Commercial	Residential and Commercial	Residential
*Utility Easement not associated with a City right-of-way shall be a minimum width of 15 feet.					
**Alternate roadway, sidewalk and planter strip design within the General Commercial, Central Business District, Multi-Family, and Industrial zoned areas may be considered by the City. Minimum sidewalk width in the Central Business District and the General Commercial Zones shall be 6 feet.					

TABLE 5-2

Design Values for Roads

Design Speed	20	25	30	35	40
Horizontal Curvature for Normal Crown Section, Radius (ft)	100	180	300	460	600
Horizontal Curvature for 2% Superelevation, Radius (ft)	N/A	155	250	375	540
Horizontal Curvature for 4% Superelevation, Radius (ft)	N/A	145	230	345	490
Horizontal Curvature for 6% Superelevation, Radius (ft)	N/A	N/A	215	320	450
Stopping Site Distance*	125	150	200	250	325
Entering Site Distance	250	300	350	400	450
Passing Site Distance for a 2-Lane Road		1,100	1,300	1,500	1,650

Reference: Snohomish County Road Standards (1992).
*If entering on a downgrade slope the stopping sight distances shall be increased for slopes greater than 3 percent per Snohomish City Standards.

5.4 STREET NAMES

The developer must check with the Planning Commission regarding the naming of streets. This should be done at the time the preliminary plat is submitted and again upon approval of the final plat. The Public Works Director or designee will insure that the name assigned to a new street is consistent with policies of the City. The City Council shall approve all street names.

An address number will be assigned to all new buildings at the time the building permit is issued. It is then the owner's responsibility to see that the house numbers are placed clearly and visibly at the main entrance to the property or at the principal place of ingress.

5.5 SIGNING

The developer is responsible for furnishing and providing all temporary and permanent traffic control signs and street designation signs. Traffic control signing shall comply with the provisions as established by the U.S. Department of Transportation Manual on Uniform Traffic Control devices (MUTCD). All signs, including poles and hardware, shall be furnished and installed by the developer. Street designation signs shall display street names or grid numbers as applicable.

5.6 RIGHT-OF-WAY

Right-of-way is determined by the functional classification of a street. Arterials, including collectors, shall have a right-of-way width of not less than 60 feet. Local access streets shall have a right-of-way width of not less than 50 feet. See Table 5-1 Minimum Street Design Standards for specific additional information.

Additional roadside easements will be required to facilitate utilities and/or future roadway widening at the discretion of the City.

Right-of-way requirements may be increased if additional lanes, pockets, transit lanes, bus loading zones, operational speed, bike lanes, utilities, schools or other factors are proposed and/or required by the City.

Right-of-way shall be conveyed to the City on a recorded plat or by a right-of-way dedication deed. All costs of same to be borne by the property owner/developer.

5.7 STREET FRONTAGE IMPROVEMENTS

A. All industrial, commercial, or residential development shall install street frontage improvements at the time of construction. Such improvements shall generally include concrete curb and gutter, concrete sidewalk, street storm drainage, street lighting system, utility installation and/or relocation, landscaping and irrigation, undergrounding aerial utilities and street pavement widening all per these Standards. Plans shall be prepared and signed by a registered engineer currently licensed in the State of Washington. Single-family residences, not associated with short or long plats, shall be exempt from this requirement.

B. All frontage improvements shall be made across the full frontage of the property.

C. All frontage improvements shall provide for a smooth transition to neighboring property.

D. Exception: When the proponent requests that the City Council evaluate if the required frontage improvements cannot be reasonably performed due to unique conditions or that it would be in the best interests of the City, the City Council will consider a request from the proponent that an "equal" and voluntary monetary amount be deposited with the City and retained by the City for such use as applicable per State law. The equivalent cost shall be approved by the city and include design, administration, and construction costs.

5.8 OFFSITE IMPROVEMENTS

Where a project is connected to an improved street by an unimproved right-of-way or gravel road within the right-of-way, offsite improvements shall be required. The offsite improvements shall be a full road section with curb, gutter, and sidewalk to serve proposed and potential future development, with associated storm drainage.

5.9 PRIVATE STREETS

A. General

While community street requirements are usually best served by public streets, owned and maintained by the City, private streets may be appropriate for some local access streets.

B. Approval

Private streets may be approved by the Public Works Director or designee only when they are:

(1) Permanently established by right-of-way, tract or easement with a minimum width of 25 feet and providing legal access to each affected lot, dwelling unit, or business and sufficient to accommodate required improvements, to include provision for future use by adjacent property owners when applicable; and

(2) Built to City of Granite Falls standards, as set forth herein, or secured under the provisions of the subdivision regulations; and

(3) Meet, at a minimum, the requirements of the Uniform Fire Code; and

(4) Accessible at all times for emergency and public service vehicle use; and

(5) Do not conflict with the City's Comprehensive Plan; and

(6) Not going to result in land locking of present or future parcels; and

(7) Not needed as public roads to meet the minimum road spacing requirements of these standards; and

(8) Serving a maximum potential of four residential units; and

(9) A maximum length of 150 feet; and

(10) Maintained by a capable and legally responsible owner or homeowners' association or other legal entity made up of all benefited property owners, under the provisions of the applicable codes; and

(11) Clearly described on the face of the plat, short plat, or other development authorization and clearly signed at street location as a private street, for the maintenance of which the City of Granite Falls is not responsible.

C. Acceptance of Private Streets

The City will not accept private streets for maintenance as public streets until such streets are brought into conformance with current City standards. This requirement will include the hard surface paving of any streets originally surfaced with gravel.

The City will not accept private streets within short plats when the roads providing access to the plat are private.

Short plats proposed on properties to which the access is over private streets not meeting the standards in this section shall be denied.

D. Internal Streets Serving Commercial Developments

Internal streets, parking lots, aisles, and alleys serving private commercial, industrial, or multi-family developments shall require the approval of the City. In all cases, adequate provisions shall be made for emergency access, maintenance and delivery access, and shall provide adequate space for turning and parking movements and pedestrian circulation and access. Where determined by the City, pedestrian areas shall be separated from vehicle areas by a physical barrier such as a vertical curb or raised

sidewalk. Also, the City may require walls, curbs, fences, landscaping or other to protect adjacent properties, provide screening, or prevent unsafe conditions in and around the parking areas. At a minimum, parking aisles and spaces shall be dimensioned in accordance with Granite Falls Municipal Code.

5.10 CUL-DE-SAC

Streets designed to have one end permanently closed shall be no longer than 400 feet. At the closed end, there shall be a widened "bulb" having a minimum paved radius as shown in Table 5-1.

5.11 TEMPORARY DEAD ENDS

Where a street is *temporarily* dead ended, turn around provisions must be provided where the road serves more than one lot. Only if preapproved by the local fire marshal and the City Council the turn around may be a hammerhead as shown in the Miscellaneous Detail Section of these Standards.

5.12 INTERSECTIONS

A. Traffic control will be as specified in the Manual on Uniform Traffic Control Devices (MUTCD) or as may be specifically modified by the City Public Works Superintendent as a result of appropriate traffic engineering studies.

B. For reasons of traffic safety, a "T" intersection (three-legged) is preferable to the crossroad (four-legged) intersection for local access streets. For safe design, the following types of intersection features should be avoided:

1. Intersections with more than four intersecting streets;

2. "Y" type intersections where streets meet at acute angles;

C. Spacing between adjacent intersecting streets, whether crossing or "T" should be as follows:

When highest classification involved is:	Minimum centerline offset should be:
Major Arterial	350 feet
Minor Arterial	300 feet
Collector Street	300 feet
Local Access Street	150 feet

When different class streets intersect, the higher standard shall apply on curb radii. Deviations to this may be allowed at the direction of the City Engineer.

D. On sloping approaches at an intersection, landings shall be provided with grade not to exceed one foot difference in elevation for a distance of 30 feet approaching any arterial or collector or 20 feet approaching a local access street, measured from nearest right-of-way line (extended) of intersecting street.

E. All intersections shall meet the sight distances as given in Table 5-1.

5.13 HALF STREETS

Road improvements that abut other private property shall include frontage improvements on the side being developed and full road width. Storm drainage shall be installed as necessary on the side abutting the neighboring property to prevent runoff from impacting neighboring property. Half-street improvements abutting private property on the non-development side are not permitted.

Road improvements that abut the public right-of-way shall, at a minimum, provide:

- Full frontage improvements along the development,
- The required road section from the centerline of the right-of-way to the edge of the development, across the full frontage of the property, including any dedication if required,
- Storm drainage improvements within the right-of-way to sufficient to prevent runoff from impacting abutting properties,
- Offsite improvements as needed to comply with the Uniform Fire Code, generally at least a 20-foot vehicular access.

5.14 DRIVEWAYS

A. General

1. Driveway details are located at the end of these Standards.

2. All abandoned driveway areas on the same frontage shall be removed and the curbing and sidewalk or shoulder and ditch section shall be properly restored, at the Property Owner's expense.

3. All driveways shall be constructed of Portland Concrete Cement, and shall be at least 6-inches thick, over a 4-inch crushed surfacing top course. Driveways shall be subject to the same testing and inspection requirements as curb, gutter, and sidewalk construction.

4. Joint-use driveways serving two adjacent parcels shall be encouraged and may be built on their common boundary upon formal written agreement by both property owners **and** approval of the City. The agreement shall be a recorded easement for both parcels of land specifying joint usage.

5. Joint-use driveways and private roads serving lots that do not front the public right-of-way may be constructed of asphalt. However, that portion of the driveway or private road within the public right-of-way shall be constructed of Portland cement concrete as discussed in No. 3 above.

6. Grade breaks, including the tie to the roadway, shall be constructed as smooth vertical curves. The maximum change in driveway grade shall be 8 percent within any 10 feet of distance on a crest and 12 percent within any 10 feet of distance in a sag vertical curve. The grades of all driveway approaches are to be approved by the City.

7. No commercial or industrial type driveway shall be constructed where backing onto the sidewalk or street is required.

8. No driveway shall extend into the street further than the face of the curb or edge of asphalt in the absence of a curb.

9. The angle between any driveway and the street shall be not less than 45°.

10. Generally, the two edges of each driveway shall be parallel.

11. Every driveway must provide access to a garage, carport, parking area or other structure on private or public property requiring the entrance of vehicles. No public curb shall be cut unless a driveway is installed.

12. Maintenance of driveway approaches shall be the responsibility of the owners whose property they serve.

13. No person shall begin work on the construction, alteration, repair or removal of any driveway or the paving of any parking strip on and/or adjacent to any street, alley or other public place in the City without first obtaining a right-of-way permit from the City. Exceptions to permit acquisition requirements may be granted at the discretion of the Public Works Superintendent and/or Building Official.

14. Driveway Location:

    No driveway shall be located as to create a hazard to pedestrians, bicyclists or motorists or to invite or compel illegal or unsafe traffic movements.

15. No driveway shall be constructed in such a manner as to be a hazard to any existing street lighting standard, utility pole, traffic regulating device or fire hydrant. At a minimum, all portions of the driveway shall be located 5 feet from these and similar appurtenances and adjacent property lines. The cost of relocating any such street structure when necessary to do so shall be paid by the abutting property owner. The relocation of any street structure shall be allowed with the specific written approval of the Owner of the structure involved.

16. Driveway approaches to City or right-of-way streets are to be paved, unless otherwise approved by the City Engineer.

17. Driveway Size and Number:

    a. Except as otherwise provided, the width of any residential driveway shall not exceed 22 feet and not be less than 10 feet (exclusive of the radii of the returns). The City Engineer may authorize additional residential driveway widths for three-car garages or for access driveways necessary for off-street parking or for recreational vehicles.
    b. The total width of all driveways for any one ownership on a street shall not exceed 30 percent of that ownership along the street. Any driveway which has become abandoned or unused through a change of the conditions for which it was originally intended or which for any other reason has become unnecessary, shall be closed and the owner shall replace any such driveway curb-cut with a standard curb according to the City's standards.

c. The length of any driveway shall not exceed one hundred fifty feet, without approval of the City Engineer.

d. There shall not be more than two driveways on one street for any one ownership except where a single ownership is developed into more than one unit of operation, each unit sufficient in itself to meet the requirements of off-street parking and loading as required by the zoning ordinance and where the necessity for separate access to the street is evident. In such cases, there shall not be more than two driveways on the street for any one unit of operation.

18. Driveway Slopes and Entry:

Driveway slopes or grades shall not exceed eight percent unless otherwise authorized/approved by the City Engineer in writing. The City Engineer will consider authorizing driveway slopes exceeding eight percent, up to a maximum of twelve percent, if it is determined that:

a. The driveway is the only economically and environmentally reasonable alternative.

b. The driveway will not present a traffic, pedestrian, bicycle or safety hazard.

c. The police and fire chief concur in allowing the increased driveway slope.

d. The public health, safety and general welfare will not be adversely affected.

e. No driveway access shall be allowed onto an arterial street within 150 feet of the nearest right-of-way line of an intersecting street without written permission from the City. No driveway shall be located within 20 feet of a crosswalk.

f. Within the limitations set forth above, access to arterial streets within the City shall be limited to one driveway for each tract of property separately owned, except that automobile service stations may be allowed two driveways as further stated herein.

g. Driveways giving direct access onto arterials may be denied if alternate access is available. Deviations of these standards may be permitted by the City Engineer.

19. Driveways may utilize the full width of narrow “pipe stem” parcels or easements if approved by the City Engineer.

20. Commercial and Industrial Driveways

For commercial or industrial driveways with heavy traffic volumes or significant numbers of trucks, the Director may require construction of the access as a street intersection. This requirement will be based on traffic engineering analysis submitted by the applicant that considers, among other factors, intersection spacing, sight distance and traffic volumes. No commercial or industrial type driveway shall be constructed, if reasonably possible, where backing onto the sidewalk or street is required. Street approaches and/or ingress and egress tapers may be required in industrial and commercially zoned areas as directed by the City Engineer.

RESIDENTIAL DRIVEWAYS

PROPERTY FRONTAGE	MAXIMUM DRIVEWAY WIDTH
<30'	10' or 30% of frontage
>30' to 50'	12' or 30% of frontage
>50' to 75'	18'
>75'	22'

5.15 SIGHT OBSTRUCTION

The following sight clearance requirements take into account the proportional relationship between speed and stopping distance.

The sight distance area is a clear-view triangle formed on all intersections by extending two lines of specified length (A) and (B) as detailed within these Standards. The area within the triangle shall be subject to restrictions to maintain a clear view on the intersection approaches.

A. Sight Distance Triangle

1. Stop or Yield Controlled Intersection:

   a. Length (A) shall be measured from the center of the intersecting streets along the centerline of the major road.

   b. Length (B) shall be measured from a point on the minor road 15 feet from the edge (extended) of the major road pavement and measured from a height of eye at 3.50 feet on the minor road to height of object at 4.25 feet on the major road.

Speed Limit	Sight Distance (feet)	
	(A) - Major Street	**(B) - Minor Street**
20 mph	200	*
25 mph	250	*
30 mph	300	*
35 mph	350	*
40 mph	400	*

2. Uncontrolled Intersection:

   a. Length (A) and (B) as shown below are from the center of the intersecting streets along the centerlines of both streets and connecting these endpoints to form the hypotenuse of the triangle.

Speed Limit	Sight Distance (feet)	
	(A) - Major Street	**(B) - Minor Street**
20 mph	90	90
25 mph	110	110
30 mph	130	130
35 mph	155	155
40 mph	180	180

The vertical clearance area within the sight distance triangle shall be free from obstructions to a motor vehicle operator's view between a height of 3 feet and 10 feet above the existing surface of the street.

Sight obstructions that may be excluded from these requirements include: fences in conformance with this chapter, utility poles, regulatory signs, trees trimmed from the base to a height of 10 feet above the street, places where the contour of the ground is such that there can be no cross visibility at the intersection, saplings or plant species of open growth habits and not in the form of a hedge which are so planted and trimmed as to leave at all seasons a clear and unobstructed cross view, buildings constructed in conformance with the provisions of appropriate zoning regulations and preexisting buildings.

5.16 SUBGRADE PREPARATION

The subgrade area of the street right-of-way shall be cleared of brush, weeds, vegetation, grass and debris, per Section 2-01 of the aforementioned Washington State Standard Specifications. All cleared and grubbed material shall be satisfactorily disposed of. All depressions, or ruts, which contain water will be drained.

The subgrade shall then be bladed and dragged to remove inequalities and secure a uniform surface. The existing subgrade will be compacted to a minimum density as defined in the Washington State Standard Specifications and as witnessed by the City Inspector. Compaction tests may be required to be conducted at the discretion of the City to verify same.

5.17 CRUSHED SURFACING (BASE AND TOP COURSE)

Surfacing shall consist of the construction of two or more courses of crushed stone upon an existing roadway surface, or upon a subgrade properly prepared as outlined above. Crushed surfacing material shall be uniform in quality and substantially free from wood, roots, bark and other extraneous material. It will compact into a dense and unyielding mass, which will be true to line, grade and cross-section.

Base courses and top courses shall be placed in accordance with the approved cross-section. Compaction shall be a minimum of 95 percent of standard density as determined by the compaction control test for granular materials. Base course rock may be composed of larger fractured rock if recommended by the developer's engineer and approved by the City Engineer.

5.18 SURFACING REQUIREMENTS

All streets in the City of Granite Falls will be paved with either Asphalt Concrete or Cement Concrete, in strict compliance with these standards.

The pavement design shall meet the requirements in the latest publication of the AASHTO Guide for Design of Pavement Structures. The pavement section shall be designed and stamped by an engineer currently licensed in the State of Washington. The pavement design shall be based upon soil parameters and projected traffic loading.

One soil sample per each 500 LF of centerline with 3 minimum per project representative of the roadway subgrade shall be taken by the Developer and delivered to a City approved soils lab in order to determine a statistical representation of the existing soil conditions.

Soil tests shall be performed by an engineering firm specializing in soils analysis and currently licensed in the State of Washington.

The soils report, signed and stamped by a soils engineer licensed by the State of Washington, shall be based on actual soils tests and submitted with the plans. All depths indicated are a minimum compacted depth.

Construction of streets paved with Hot Mix Asphalt Concrete shall conform to Section 5-04 of the Washington State DOT Standard Specifications. Pavement material will be hot mix asphalt concrete and be constructed at least 3 inches thick (minimum compacted thickness) over the prepared crushed surface, top course, or asphalt treated base. Generally, the accepted asphalt hot mix is PG 58-22. Mechanical spreading and finishing will be as described in Section 5-04.3(9) of the Standard Specifications. Compaction will be performed by the equipment and methods presented in Section 5-04.3(10) of the Standard Specifications, and Surface Smoothness shall satisfy the requirement of Section 5-04.3(13) of the Standard Specifications. Hot mix asphalt placed as final patch for utility trenches, or where a road is widened, shall be at least as thick as the existing asphalt and shall not be less than 5 inches thick.

Cement concrete streets will be constructed as specified in Section 5-05 of the Standard Specifications.

Permanent pavement patching will be performed as described in the pavement repair detail listed herein, and in compliance with Section 5-04 of the Standard Specifications. All fill material will be placed in lifts no thicker than 6 inches and mechanically compacted to 95 percent of standard density, as described in Section 2-03 of the Standard Specifications and to the satisfaction of the City Inspector.

5.19 TEMPORARY STREET PATCHING

Temporary restoration of trenches shall be accomplished by using 2-inch Hot Mix Asphalt Concrete Pavement when available or 4-inch medium-curing (MC-250) liquid asphalt (cold mix), 3-Inch Asphalt Treated Base (ATB), or steel plates suitable for H-20 traffic loading conditions. Steel plates shall be provided with a cold mix “lip” to accommodate a smooth transition from pavement to steel plate.

ATB used for temporary restoration may be dumped directly into the trench, bladed and rolled. After rolling, the trench must be filled flush with ATB pavement to provide a smooth riding surface.

All temporary patches shall be maintained by the contractor until such time as the permanent pavement patch is in place. All temporary patch materials shall be loaded and hauled to waste by the Developer, in compliance with applicable governmental regulations.

If the contractor is unable to maintain a patch for whatever reason, the City will patch it at actual cost plus overhead and materials. The property

owner/developer/permittee shall be invoiced for any City expenses incurred to comply with this Contractor requirement.

5.20 TRENCH BACKFILL AND RESTORATION

Trench restoration shall be either by a patch or a patch plus overlay as required by the City.

A. All trench and pavement cuts shall be made by sawcuts. The cuts shall be a minimum of 1 foot outside the trench width or 1 foot outside any pavement that cracks as a result of the trenching activities.

B. All trenching shall be backfilled with gravel base, crushed surfacing materials or hot mix asphalt conforming to Section 4 of the WSDOT Standard Specifications. The trench shall be compacted to 95 percent maximum density, as described in Section 2-03 of the WSDOT Standard Specifications. The City will be the sole judge of approving materials to be utilized for backfill. Typically, crushed rock (5/8-inch minus) or control density fill (CDF) shall be placed and compacted in the trench sections for all right angle (±) street crossings.

If the existing material is determined by the City to be suitable for backfill, the contractor may use the native material except that the top 12 inches of the trench section shall be 5/8-inch minus crushed rock or other structurally suitable material as approved by the City Inspector or Engineer. Exceptions may be granted by the City based on site evaluation of excavated materials. All trench backfill materials shall be compacted to 95% density.

Backfill compaction shall be performed in 6 inch lifts, unless otherwise approved by the City.

Replacement of the asphalt concrete or Portland concrete cement shall match existing asphalt concrete or Portland concrete cement depth, except asphalt shall be a minimum compacted thickness of 2 inches and concrete cement shall be a minimum compacted thickness of 6 inches.

C. Tack coat shall be applied to the existing pavement and edge of cut and shall be emulsified asphalt grade CSS-1 as specified in Section 9-02.1(6) of the WSDOT Standard Specifications. Tack coat shall be applied as specified in Section 5-04 of the WSDOT Standard Specifications.

D. Hot mix asphalt concrete shall be placed on the prepared surface by an approved paving machine and shall be in accordance with the applicable

requirements of Section 5-04 of the WSDOT Standard Specifications, except that longitudinal joints between successive layers of asphalt concrete shall be displaced laterally a minimum of 12 inches unless otherwise approved by the City. Fine and coarse aggregate for asphalt shall be in accordance with Section 9-03.8 of the WSDOT Standard Specifications. Asphalt concrete over 2 inches thick shall be placed and compacted in equal lifts not to exceed 2 inches each.

All street surfaces, walks or driveways within the street trenching areas affected by the trenching shall be sawcut, or ground and paved to an extent that provides a smooth-riding connection and expeditious drainage flow for the newly paved surface. Feathering the asphalt shall not be allowed.

Surface smoothness shall be per Section 5-04.3(13) of the WSDOT Standard Specifications. The paving shall be corrected by removal and repaving of the trench only.

E. All joints shall be sealed using paving asphalt AR4000W.

F. When trenching within the roadway shoulder(s), the shoulder shall be restored to its original or better condition.

G. The final patch shall be completed as soon as possible and shall be completed within 30 days after first opening the trench. This time frame may be adjusted if delays are caused by inclement paving weather, or other adverse conditions that may exist. However, delaying of final repair is allowable only subject to the City Engineer's approval. The City Engineer may deem it necessary to complete the work within the 30 days time frame and not allow any time extension. If this occurs, the Contractor shall perform the necessary work as required by the City.

5.21 MATERIAL AND CONSTRUCTION TESTING

Testing shall be required at the developer's or contractor's expense. The testing shall be ordered by the developer or contractor and the chosen testing lab shall be preapproved by the City. Testing shall be done on all materials and construction as specified in the WSDOT Standard Specifications and with frequency as specified herein.

In addition, the City shall be notified before each phase that street construction commences (i.e., staking, grading, subgrade, ballast, base, top course, and surfacing).

CITY OF GRANITE FALLS
TESTING AND SAMPLING FREQUENCY GUIDE

ITEM	TYPE OF TESTS	MIN. NO.	FREQUENCY
GRAVEL BORROW	GRADING & SE	1 EACH	1-4000 TON
SAND DRAINAGE BLANKET	GRADING	1 EACH	1-4000 TON
CSTC	GRADING, SE & FRACTURE	1 EACH	1-2000 TON
CSBC	GRADING, SE & FRACTURE	1 EACH	1-2000 TON
BALLAST	GRADING, SE & DUST RATIO	1 EACH	1-2000 TON
BACKFILL/SAND DRAINS	GRADING	1 EACH	1-2000 TON
GRAVEL BACKFILL FOR:			
FOUNDATIONS	GRADING, SE & DUST RATIO	1 EACH	1-1000 TON
WALLS	GRADING, SE & DUST RATIO	1 EACH	1-1000 TON
PIPE BEDDING	GRADING, SE & DUST RATIO	1 EACH	1-1000 TON
DRAINS	GRADING	1 EACH	1-100 TON
PCC STRUCTURES: (Sidewalk, Curb and Gutter, Foundations)			
COARSE AGGREGATE	GRADING	1 EACH	1-1000 TON
FINE AGGREGATE	GRADING	1 EACH	1-500 TON
CONSISTENCY	SLUMP	1 EACH	1-100 CY
AIR CONTENT	AIR	1 EACH	1-100 CY
CYLINDERS (28 DAY)	COMPRESSIVE STRENGTH	2 EACH	1-100 CY
CEMENT:	CHEMICAL & PHYSICAL CERTIFICATION	1	1-JOB
ASPHALT CEMENT CONCRETE:			
BLEND SAND	SE	1 EACH	1-1000 TON
MINERAL FILLER	S.G. & PI, CERTIFICATION	1	1-JOB
COMPLETED MIX	FRACTURE, SE, GRADING, ASPHALT CONTENT	1 EACH	1-1000 TON
	COMPACTION	2 EACH	5-400 TON
ASPHALT TREATED BASE:			
COMPLETED MIX	SE, GRADING, ASPHALT CONTENT	1 EACH	1-1000 TON
	COMPACTION	1 EACH	5-Control Lot*
ASPHALT MATERIALS	CERTIFICATION	1	1-JOB
RUBBERIZED ASPHALT:	CERTIFICATION	1	1-JOB

COMPACTION TESTING:

EMBANKMENT	COMPACTION	1 EACH 1-500 LF
CUT SECTION	COMPACTION	1 EACH 1-500 LF
CSTC	COMPACTION	1 EACH 1-500 LF
CSBC	COMPACTION	1 EACH 1-500 LF
BALLAST	COMPACTION	1 EACH 1-500 LF
TRENCH BACKFILL	COMPACTION	1 EACH 1-500 LF

SE = Sand Equivalency

* A control lot shall be a normal day's production. For minor quantities 200 tons or less per day, a minimum of two (2) gauge readings shall be taken.

5.22 SIDEWALKS, CURBS AND GUTTERS

A. Design Standards

Plans for the construction of sidewalks, curbs and gutters are to be submitted as part of the street plans when applicable.

The City has set forth minimum standards as shown in details, which must be met in the design and construction of sidewalks, curbs and gutters. Because these are minimum standards, they may be modified by the City should the City Engineer feel circumstances require variances to minimum design standards.

B. Sidewalks

Sidewalks shall be constructed of Portland Cement Concrete, 4 inches thick (6-inch thick at driveway sections) per Section 8-14 of the WSDOT Standard Specifications. When the sidewalk, curb and gutter are contiguous, the width of the sidewalk shall be measured from back of curb to back of sidewalk.

Sidewalks will be constructed on a compacted gravel base, or 5/8-inch minus crushed rock of suitable thickness to provide a firm and unyielding base. Sidewalks will be constructed of Portland Cement Concrete as described in Section 8-14 of the Standard Specifications and be designed and constructed in compliance with those Details as shown herein. Typically, in commercially zoned areas the sidewalks shall abut the curb. The Planning Commission and/or City Council shall be at liberty to vary sidewalk dimensional characteristics and location to meet localized or existing conditions.

The sidewalk thickness shall be as follows:

SIDEWALK LOCATION	SIDEWALK THICKNESS
Typical sidewalk with vertical curb	4" thick
Typical sidewalk with rolled curb	6" thick
Driveway sections	6" thick

The sidewalks will be divided into five foot lengths by contraction joints and expansion joints will be at intervals of no more than 15 feet. Joints shall be filled with an asphalt mastic material.

C. Curb and Gutter

Cement concrete curb and gutter shall be used for all street edges unless otherwise approved by the Public Works Superintendent. All curbs and gutters shall be constructed of Class 3,000 psi Cement Concrete in accordance with Section 6-02 of the Standard Specifications. Curbs shall be of the vertical face type. No rolled curb and gutter profile will be allowed without specific approval of the Public Works Superintendent. When rolled curbs are approved, all sidewalks within the Plat shall be a minimum 6 inches thick.

Extruded curb and gutter per WSDOT Standard Specifications is allowed only with the specific approval of the City Engineer.

Form and subgrade inspection by the City are required before curb and gutter are poured.

Forms, wood or steel, shall be staked securely in place, true to line and grade.

Sufficient support shall be given to the form to prevent movement in any direction, resulting from the weight of the concrete or the concrete placement. Forms shall not be set until the subgrade has been compacted within one inch of the established grade. Forms shall be clean and well oiled prior to setting in place. When set, the top of the form shall not depart from grade more than 1/8 inch when checked with a 10-foot straightedge. The alignment shall not vary more than 1/4 inch in 10 feet. Immediately prior to placing the concrete, forms shall be carefully inspected for proper grading, alignment and rigid construction. Adjustments and repairs as needed shall be completed before placing concrete.

The subgrade shall be properly compacted and brought to specified grade before placing concrete. The subgrade shall be thoroughly dampened immediately prior to the placement of the concrete. Concrete shall be spaded and tamped thoroughly into the forms to provide a dense, compacted concrete free of rock pockets. The exposed surfaces shall be floated, finished and brushed longitudinally with a fiber hair brush approved by the City's inspector and/or engineer.

The face form of the curb shall be stripped at such time in the early curing as will enable inspection and correction of all irregularities that appear thereon.

Forms shall not be removed until the concrete has set sufficiently to retain its true shape. The face of the curb shall be trawled with a tool cut to the exact section of the curb and at the same time maintain the shape, grade and alignment of the curb. The exposed surface of the curb shall be brushed with a fiber hair brush.

Joints shall be cleaned and edged as shown on the drawings. All expansion and contraction joints shall extend entirely through the curb section above the pavement surface. Joint filler in the curb shall be normal to the pavement and in full and constant contact with pavement joint filler.

D. Handicap Ramps

All sidewalks must be constructed to provide for handicap ramps in accordance with the current standards of applicable state law. Details provided herein are minimum and subject to change. It is the Developer's responsibility to verify current ADA requirements and install same per current standards even if City has approved of construction drawings with non-compliant ADA requirements.

Handicap Ramps shall be constructed of Portland Cement Concrete. Form and subgrade inspection by the City are required before handicap ramp is poured.

E. Testing

Testing shall be required at the developer's or contractor's expense on all materials and construction as specified in the WSDOT Standard Specifications.

At a minimum, one slump test and two test cylinders shall be taken once per day. All other testing frequencies shall be as specified in Section 5.2.

In addition, the City shall be notified before each phase of sidewalk, curb and gutter construction commences.

5.23 ILLUMINATION

A. General

Illumination shall be required unless otherwise directed by the City Council. The illumination shall provide a minimum intensity of 0.4-foot candles within the right-of-way. The design shall be approved by Snohomish County PUD and the City.

B. Downtown and Commercial Development and Redevelopment

Properties that develop or redevelop within the General Commercial or Central Business District areas shall install streetlights in accordance with City standards.

These lights shall be installed at a maximum spacing of 80 feet and located in back of the sidewalk and within the right-of-way. Conduit and wiring shall be installed to allow for continuation of the circuit(s) and to provide power to each light.

City Standard – Lumec

Pole	AM6U-12-BAS16-GN8TX
Luminaire	Contemporary Lantern L80-70HPS-PC-CS-SE5-120-SF80-GNTX
Shielding	L80-70HPS-PC-CS-SE3-SF80-HS (if required)
Bulb	70-watt High-Pressure Sodium
Bracket	GFI-GN8TX to include duplex receptacle, 15 A, 120 volts, GFI type complete with weatherproof cover.
Color	Dark Forest Green Textured (GN8TX)

5.24 SIGNALS

A. General

Signalization will be required if warranted as determined by an existing study and/or transportation study performed by the Developer at the request of the City. The developer shall pay the entire cost of signalization if it is warranted, or wait until the City has procured sufficient monies to cause signalization improvements at the intersection(s). All components of the signal shall become the property of the City upon project acceptance.

5.25 ROADSIDE FEATURES

A. General

Miscellaneous features included herein shall be developed and constructed to encourage the uniform development and use of roadside features wherever possible.

B. Design Standards

The design and placement of roadside features included herein shall adhere to the specific requirements as listed for each feature.

C. Survey Monuments

1. All existing (or new) survey control monuments and/or markers which are disturbed, lost, or destroyed during surveying or building shall be replaced with the proper monument as outlined below by a land surveyor currently registered (licensed) in the State of Washington at the expense of the responsible contractor, builder or developer.

2. Street type: Major Arterial or Minor Arterial; Collector Street;

   A pre-cast concrete monument with cast iron monument case and cover installed per City of Granite Falls Standards is required.

   If the monument case and cover are placed in cement concrete pavement, the pre-cast base will not be necessary.

3. Street type: Local Access;

   A cast-in-place concrete surface monument with sufficient ferrous metal embedded to allow for detection by a magnetic detection device per City of Granite Falls standards is required.

4. Monument Locations

   Appropriate monuments shall be placed:

   a. At all street intersections;

   b. At the PC and PT's of all horizontal curves;

   c. At PI of all horizontal curves of streets where the PI lies within the limits of the traveled roadway;

   d. At all corners, control points and angle points around the perimeter of subdivisions as determined by the City;

   e. At all section corners, quarter corners, and sixteenth corners that fall within the right-of-way.

D. Mailboxes

1. During construction, existing mailboxes shall be accessible for the delivery of mail or, if necessary, moved to a temporary location. Temporary relocation shall be coordinated with the local U.S. Postal Service. The mailboxes shall be reinstalled at the original location or to a new location as may be required by the local Postmaster, as further outlined below and approved by the U.S. Postal Service.

2. Location

   a. Bottom or base of box shall be 36" to 42" above the road surface.

   b. Front of mailbox 18 inches behind vertical curb face or outside edge of shoulder.

   c. New developments. Clustered mailboxes will, in all likelihood, be required. Contact the City not the U.S.

Postal Service for details. Sidewalks shall be constructed to facilitate same.

d. Buck-outs in sidewalks and sidewalk re-alignment may be required per the City Engineer.

3. Mailboxes shall be set on posts strong enough to give firm support but not to exceed 4-inch x 4-inch wood or one 1-1/2-inch-diameter pipe, or material and design with comparable breakaway characteristics. Deviations may be allowed only with the written approval of the City.

E. Guard Rails

For purposes of design and location, all guard rails along roadways shall conform to the criteria of the "Washington State Department of Transportation Design Manual" as may be amended or revised.

F. Rock Walls

Rock walls may be used for erosion protection of cut embankments up to a maximum height of 8 feet in stable soil conditions, which will result in no significant foundation settlement or outward thrust upon the walls. For heights over 8 feet or when soil is unstable, a structural wall of an acceptable design, stamped by a structural engineer currently licensed in the State of Washington, shall be used and the design shall be approved by the City of Granite Falls. Design and construction shall be per the Association of Rockery Contractors (ARC) Specifications and/or applicable geotechnical recommendations. Rock walls over 8-feet high shall be subject to inspection by a geotechnical engineer as outlined in the following paragraph.

Any rock wall with an exposed surface over 30 inches high in a fill section shall require an engineered design by a geotechnical engineer. The geotechnical engineer shall continuously inspect the installation of the wall as it progresses and shall submit inspection reports, including compaction test results and photographs taken during the construction, documenting the techniques used and the degree of conformance to the geotechnical engineer's design.

1. The rock material shall be as nearly rectangular as possible. No stone shall be used which does not extend through the wall. The rock material shall be hard, sound, durable and free from

weathered portions, seams, cracks and other defects. The rock density shall be a minimum of 160 pounds per cubic foot.

2. The rock wall shall be started by excavating a trench having a depth below subgrade of one half the base course or 1 foot (whichever is greater).

3. Rock selection and placement shall be such that there will be minimum voids and, in the exposed face, no open voids over 6 inches across in any direction. The final course shall have a continuous appearance and shall be placed to minimize erosion of the backfill material. The larger rocks shall be placed at the base of the rockery so that the wall will be stable and have a stable appearance. The rocks shall be placed in a manner such that the longitudinal axis of the rock shall be at right angles or perpendicular to the rockery face. The rocks shall have all inclining faces sloping to the back of the rockery. Each course of rocks shall be seated as tightly and evenly as possible on the course beneath. After setting each course of rock, all voids between the rocks shall be chinked on the back with quarry rock to eliminate any void sufficient to pass a 2-inch square probe.

4. The rock wall backfill shall consist of quarry spalls with a maximum size of 6 inches and a minimum size of 4 inches or as specified by a licensed engineer. This material shall be placed to a 12-inch minimum thickness between the entire wall and the cut or fill material. The backfill material shall be placed in lifts to an elevation approximately 6 inches below the top of each course of rocks as they are placed, until the uppermost course is placed. Any backfill material on the bearing surface of one rock course shall be removed before setting the next course.

5. Perforated drainage pipe and filter fabric shall be installed as required by the City.

G. Street Trees and Landscaping Items

Street trees and/or landscaping items (including irrigation if appropriate) shall be furnished and installed as may be specifically required by the City. If such is required, landscaping shall be of one of the referenced types as specified herein or in the Snohomish PUD "Tree Book," and/or as otherwise may be approved by the City. These landscaping items, including trees and irrigation, shall be furnished and installed at the City's

sole discretion, direction, and approval. Exact size, spacing, type, location, and quantity to be as specified by the City.

Hedges are not allowed on planter strips. Trees or low shrubs (<2.5 ft) are acceptable. Trees must be planted to the following standards:

- 3 feet back from the face of curb.
- 5 feet from underground utility lines.
- 10 feet from power poles (15 feet recommended).
- 7-1/2 feet from driveways (10 feet recommended).
- 20 feet from street lights or existing trees.

The following trees are prohibited from the Right-of-Way:

- Acer Macrophyllum (Big Leaf Maple, Oregon Maple).
- Populus Trichocarpa, P. deltoides (Cottonwoods)
- Populus Nigra (Lombardy Poplar)

These species have aggressive roots. The wood of some species is brittle and can break in the wind.

The following is a list of trees acceptable for planter strips. Other tree species may be allowed at the City's discretion:

Acceptable Tree Planting

Botanical Name Common Name	Height in Feet	Spread in Feet	Flowers	Fall Color	Comments/Notes
Acercampestre Hedge Maple	20	20		Yellow	Prefers Moist Soil
Acerginnala 'Evelyn' Queen Elizabeth Maple	35	30		Yellow	Tolerates heat, cold, and drought
Acer Palmautum Japanese Maple	25	25		Orange / Red	Filtered Shade
Amelanchier X Juneberry	20	15	White	Orange/ Red	Bright Fall Colors
Cornus Kousa Japanese Dogwood	30	25	White	Raspberry like Fruit	Dense Foliage

Botanical Name Common Name	Height in Feet	Spread in Feet	Flowers	Fall Color	Comments/Notes
Crataegus crus-galli 'Inermis' Thornless Cockspur Hawthorn	25	30	Small White	Orange to Scarlet	Red persistent fruit
Crataegus X lavalii Lavalle Hawthorn	25	20	Small White	Bronze	Thorns on younger trees
Crataegus phaenopyrum Washington Hawthorn	25	20	Small White	Scarlet	Thorny
Cornus Mas Cornelian Cherry Dogwood	25	20	Yellow	Red/ Yellow	Cherry like Fruit
Magnolia grandiflora 'Victoria'	25	20	White	Evergreen	
Malus 'Tschonoskii'	28	14	White	Scarlet	Sparse green fruit, pyramidal
Prunus x hillieri 'Spire'	30	10	Pink	Orange Red	
Pyrus calleryana 'Capital' Pear	35	12	White	Reddish Purple	Smaller than 'Aristocrat', may break up in snow
Pyrus calleryana 'Aristocrat' Pear	40	45	White	Red	
Pyrus calleryana 'Redspire' Pear	35	25	White	Yellow to Red	Pyramidal
Pyrus calleryana 'Autumn Blaze' Pear	30	25	White	Scarlet	Vigorous

Botanical Name Common Name	Height in Feet	Spread in Feet	Flowers	Fall Color	Comments/Notes
Sorbus Tianshanica Red Cascade Mt. Ash	16	8	White	Yellow/ Orange	Orange Red Fruit
Sorbus x hybridia Oakleaf Royal Mt. Ash	30	20	White	Rust	
Styras japonica Japanese Snowbell	25	25	White	Yellow	Plentiful, green 1/2" seeds.
Tilia cordata 'De Groot' Linden	30	20		Yellow	Compacts, suckers less than other Lindens.

5.26 PARKING LOTS

Plans shall be submitted for review and approval by the City prior to the work being completed. The Plans and any other submittals shall address storm drainage discharge and on site retention or detention, connection to street and/or sidewalk, access locations, and parking layout. The City shall also check for future street improvement conformity and City zoning regulations.

Parking lot surfacing materials shall satisfy the requirement for a permanent all-weather surface. Asphalt concrete pavement and cement concrete pavement satisfy this requirement and are approved materials. Gravel surfaces are not acceptable or approved surface material types.

5.27 UTILITIES

Utilities shall be furnished and installed within the right-of-way beneath new roads, or in existing roadways and rights-of-way so as to provide minimal interference with existing utilities and shall be located as generally shown in Standard Details listed herein. Where existing utilities are in place, new utilities shall conform to these Standards as nearly as practical and yet be compatible with the existing installations. Exceptions may be approved by the City when necessary to meet special or localized requirements. Utilities shall be sized and designed to serve adjacent and tributary areas. Typically, utilities shall be required to be extended to "far" property lines. Easements shall be procured and provided by the developer to facilitate same. Utilities shall not be "land locked."

A. Water Lines

Water lines shall be located as follows:

1. Shoulder-and-Ditch Section (on existing "standard" street sections):

   If practical: Outside of ditch line.
   Otherwise: In shoulder 3 feet minimum from edge of pavement edge.

2. Curb and Gutter Section: 5 feet from centerline. Mains and service connections to all lots should be completed prior to placing of surface materials. A location outside of existing roadway improvements will be considered by the City Engineer based on local conditions. This location, however, must be approved by the City Engineer.

3. Designated side of centerline: North and East.

4. Depth: Per City standards.

B. Sanitary Sewers

Sanitary sewers shall be located 5 feet south and west of centerline; depth approximately 8 feet minimum from finished grade, unless otherwise approved by the City Engineer. Greater depths may be required to serve adjacent properties and tributary properties. Easements shall be provided to facilitate same.

Sanitary and water lines shall be horizontally and vertically separated per Washington State Department of Ecology minimum requirements unless otherwise approved by the City Engineer.

Gravity systems, whether sanitary or storm drainage, shall have precedence over other systems in planning and installation.

C. Other Utilities

Other utilities (gas, power, telephone, and cable TV) shall be located as follows: underground, either side of road, at plan location and depth compatible with other utilities and storm drains.

It site topography or other site conditions prevent reasonable underground installation utilities shall be on poles (as applicable) set back of ditchline, sidewalk or curb, at locations compatible with driveways, intersections, and other essential road features. To extent practical, utilities should share facilities so that a minimum of poles are needed, and preferably on only one side of road.

Notwithstanding other provisions, underground systems shall be located at least 5 feet away from road centerline and where they will not otherwise disturb existing survey monumentation.

D. Utility Crossings in Existing Streets

For smaller diameter pipes and wires the crossing shall be made without surface cut of the traveled portion where the street is of oil mat or better. The crossing shall be made by pushing or boring a pipe under the road. Where rock is known or expected in the area of the crossing, the attempt need not be first, open cutting will be permitted, but prior approval of the City is required.

5.28 ASPHALT CONCRETE PEDESTRIAN PATHS AND/OR BIKEWAYS

A. Minimum Easement or Right-of-Way Width: Fifteen feet minimum. Twenty feet preferred. Unless otherwise approved by City Engineer.

B. Construction Width. Five feet *minimum.* Greater widths may be required by City up to 12 feet maximum.

C. Subgrade. Prepared per Section 2.06 of APWA.

D. Bankrun Gravel, Class A. As required.

E. Crushed Rock Base Course one and one-half inch minus. One and one-half inch minimum depth. Greater depths may be required by City Engineer based on use and local ground conditions.

F. Crushed Rock Top Course 5/8-inch minus. One and one-half inch minimum depth. Greater depths may be required by City Engineer based on use and local ground conditions.

G. Paving Course. Two-inches hot mix asphalt concrete. Greater depths may be required by City Engineer based on use and local ground conditions.

CHAPTER 6

STORM DRAINAGE STANDARDS

6.1 GENERAL

The standards established by this chapter are intended to represent the **minimum** standards for the design and construction of storm drainage facilities. Greater or lesser requirements may be mandated by the City due to localized conditions. Storm drainage revisions, additions, modification, or changes shall be made in compliance with City standards, ordinances, and Best Management Practices as identified in the Washington State Department of Ecology Stormwater Management Manual for Western Washington (2005). Adequate provisions shall be made for storm drainage, storm sewers, and associated appurtenances sufficient to transmit maximum runoff from the one hundred year, 24 hour event. All storm drainage facilities shall be designed by a professional engineer licensed in the State of Washington.

If warranted based on the condition and capacity of the existing storm drainage infrastructure (or lack thereof) and, impacts caused by the proposed development, off-site improvements may be required, at the City Engineer's discretion, to mitigate impacts caused by the proposed development.

6.2 DESIGN STANDARDS

On-site detention or infiltration systems shall be provided to ensure that post development stormwater discharge are in accordance with the Stormwater Management Manual. The design of storm drainage and detention systems shall depend on their type and local site conditions. The design elements of storm drainage systems shall conform to City Standards as set forth herein. The following design considerations shall apply:

A. The use of commercial parking lots for detention of stormwater will be reviewed by the City Engineer and approved or denied based on the design, location and general parameters of the project. The detention area shall be situated away from areas of pedestrian movement unless means for rapid closing of the areas is incorporated in the design. The maximum depth of water in parking lot storage shall be limited to 6 inches. Curbs cannot be used for retaining storage.

B. Maximum catch basin spacing shall be 200 feet on road grades up to 3 percent, 400 feet when the road grade is 3 percent or greater. No surface water (unless otherwise approved in writing by the City Engineer) shall

cross any roadway. In addition, catch basins shall be placed whenever the length of surface drainage exceeds 300 feet on road grade, extending either direction from crest or sag on vertical curves. Vaned grates shall be employed on street grades exceeding 6% slope.

C. Plans for storm drainage shall indicate where the stormwater will be treated, detained, and discharged or infiltrated. The plans and drainage calculations must show that the pipes and channels downstream from the discharge point (a minimum of 1/4 mile) can carry the runoff without damage to the adjoining properties or surcharging of the system. The City Engineer may require that the downstream analysis be continued to incorporate sensitive areas such as steep slopes. Provisions shall be made for detainage and/or retainage of stormwater in order to control the amount of storm runoff to the Standards in the Ecology Stormwater Management Manual.

D. Where storm drains run outside an existing public right-of-way, permanent easements will be required for public or private maintenance as may be required and warranted. Such easement shall be a minimum of 15 feet in width unless otherwise approved or required by the City. Where the City is to maintain the storm drain, a permanent easement will be required having a minimum width of 15 feet. A construction (temporary) easement of suitable width shall also be provided.

E. Storm Drain Detention Systems shall be, at a minimum, designed and constructed in strict compliance with the Stormwater Management Manual and any amendments thereto. Local prevailing conditions may warrant higher standards as determined by the City Engineer. The Developer and/or Homeowners Association shall enter into a formal, legally binding agreement, as approved by the City Attorney, regarding the landowner's duties and obligations regarding their ownership, operation and maintenance of the system.

F. All portions of publicly owned and maintained detention and or infiltration facilities shall be in public right-of-way or dedicated land tracts.

G. All infiltration systems shall be open at the top to allow for maintenance. No underground, open bottom tanks, vaults, pipes or similar structures are allowed for infiltration.

H. Storm Drainage Ponds shall have a minimum side slope of 3:1 (H:V). The perimeter fence shall be 6 feet high and landscaped so as to hide the fence.

6.3 CONVEYANCE

Pipe: Storm drain pipe within a public right-of-way or easement shall be sized to carry the 25-year runoff from the contributing tributary area.

The minimum pipe size shall be 12 inches diameter. Runoff shall be computed and, if the flow requires it, a larger pipe shall be used. Nothing shall preclude the City from requiring the installation of a larger sized main if the City determines a larger size is needed to serve adjacent areas or for future service.

Storm drain gradients shall assume a minimum flow velocity of 2 feet per second. All pipe for storm mains shall be "pre-approved" by the City's Engineer based on localized conditions.

1. Storm drain pipe shall meet the following requirements:

   A. Plain concrete pipe conforming to the requirements of AASHTO M 86, Class 2.

   B. Reinforced concrete pipe conforming to the requirements of AASHTO M 170.

   C. PVC pipe shall conform to ASTM D 3034-73 SDR 35 for 4" thru 15" diameter PVC pipe, and shall conform to ASTM F 679 for 18" thru 27" diameter PVC pipe, with joints and gaskets conforming to ASTM D 3212 and ASTM F 477.

   D. Ductile iron pipe conforming to the requirements of ANSI A21.51, and AWWA C 151, thickness class as approved by City Engineer.

   E. Polyethylene smooth wall pipe per Advanced Drainage Systems (ADS) N-12, bell and spigot, constructed per WSDOT Standard Specifications 7-04. Note: This type of pipe will only be approved with the City's specific written approval. Approval shall be based on site specific conditions and if additional on-site inspection time for witnessing proper pipe installation can be scheduled by the City.

6.4 CONNECTIONS

Connections of storm drain pipe leading from an existing or new street into an existing main storm drain may be made only with a new structure, subject to case-by-case review and approval of the City Engineer or Public Works Field Inspector/Superintendent and subject to the following additional requirements:

1. The inletting structure shall be a catch basin and not a simple inlet lacking a catch or drop section.

2. Length of inlet connection shall be as approved by the City Engineer.

6.5 STREET PATCHING AND RESTORATION

See Sections 5.18, 5.19, and 5.20 for requirements regarding street patching and trench restoration.

6.6 CLEANING AND TESTING

Upon completion of work of the constructed storm drainage system shall be cleaned and tested in accordance with the Standard Specifications. Videotaping shall be completed in accordance with Section 7.6, Videotaping for Sanitary Sewers.

All lines shall be flushed clean of all debris prior to acceptance. The debris shall be intercepted and collected at the nearest downstream point of access. The material shall then be wastehauled to an approved dump site.

Water for flushing shall be made available and obtained from the City. However, the City reserves the right to operate all hydrants at times and locations convenient to their schedules and available personnel.

6.7 INSPECTION

The Contractor shall request for inspection a minimum of 48 hours prior to the Contractor's scheduled need. Inspection shall be required for the following items of work:

1. Pipe and bedding installation.
2. Backfill and compaction.
3. Grouting catch basins.

Upon completion of the project all storm sewer installations shall be inspected with television inspection equipment. The Contractor shall provide the City with a copy of the inspection and shall have the city present during the television inspection.

CHAPTER 7

SANITARY SEWER STANDARDS

7.1 GENERAL

The standards established by this chapter are intended to represent the **minimum** standards for the design and construction of sanitary sewer facilities. Greater or lesser requirements may be mandated by the City due to localized conditions. Washington State Department of Ecology's Design Standards shall also be employed by the City in its review and approval of system connections, extensions, and/or modifications.

"Off-site" improvements may be warranted based on (1) the existing condition and capacity of the existing sanitary infrastructure and, (2) impacts caused by the proposed development. These off-site improvements (in addition to "on-site" improvements as may be warranted) will be as determined by the City Engineer so as to reasonably mitigate impacts caused by development.

The following design and construction considerations shall apply:

7.2 DESIGN STANDARDS

The design of sanitary sewer systems shall be dependent on local site conditions. The design elements of sanitary sewer systems shall conform to minimum City Standards set forth herein.

A. Detailed plans shall conform with the requirements of the Plan Checklist presented in the appendices.

B. Construction of new sewer systems or extensions of existing systems will be allowed only if the existing receiving system is capable of supporting the added hydraulic load. Sewers shall be extended to the far property line(s) to facilitate future extensions of same.

C. Collection and interceptor sewers shall be designed and constructed for the ultimate development of the tributary areas.

D. Sewer systems shall be designed and constructed to achieve total containment of sanitary wastes and maximum exclusion of infiltration and inflow.

E. Computations and other data used for design of the sewer system shall be submitted to the City for approval.

F. All sewers shall be designed to prevent damage from superimposed loads. Proper allowance for loads on the sewer because of the width and depth of trench should be made. When standard-strength sewer pipe is not sufficient, extra-strength pipe shall be used.

G. All pipe shall be laid in straight lines and at uniform rate of grade between manholes. Variance from established line and grade shall not be greater than 1/2 inch, provided that such variation does not result in a level of reverse sloping invert; provided, also, that variation in the invert elevation between adjoining ends of pipe, due to non-concentricity of joining surface and pipe interior surfaces, does not exceed 1/64 inch per inch of pipe diameter, or 1/2 inch maximum. Any corrections required in line and grade shall be reviewed with the City and/or the City Engineer and shall be made at the expense of the Developer and/or Contractor.

H. Deflection tests shall be performed on all PVC sewer mains and the deflection test limit shall be 5.0 percent of the base inside diameter of the pipe.

I. Prior to final inspection, all pipelines shall be tested, flushed and cleaned and all debris removed. A pipeline "cleaning ball" of the proper diameter for each size of pipe shall be flushed through all pipelines prior to final inspection. Hydrant meters shall be acquired (deposit required) from the City and utilized by the Contractor for all water withdrawn from the City of Granite Falls system for flushing purposes.

J. Before sewer lines are accepted, the Contractor/Developer shall perform a complete televised inspection of the sewer pipe and appurtenances and shall provide to the City an audio-visual tape recording of these inspections. All equipment and materials shall be compatible with existing City equipment. It shall be the Contractor/Developer's responsibility to confirm equipment compatibility with the City prior to inspection. The City's Utility Superintendent and/or his designated representative shall be notified 48 hours prior to any televised inspection.

K. After all other work is completed and before final acceptance, the entire roadway, including the roadbed, planting, sidewalk areas, shoulders, driveways, alley and side street approaches, slopes, ditches, utility trenches, and construction areas shall be neatly finished to the lines, grades and cross sections for a new roadway consistent with the original section.

L. The Developer shall be required, upon completion of the work and prior to acceptance by the City, to furnish the City with a written guarantee covering all material and workmanship for a period of two years after the date of final acceptance and the Developer shall make all necessary repairs during that period at his own expense, if such repairs are necessitated as the result of furnishing poor materials and/or workmanship. The Developer shall obtain warranties from the contractors, subcontractors and suppliers of material or equipment where such warranties are required, and shall deliver copies to the City upon completion of the work.

7.3 GENERAL REQUIREMENTS

1. Prior to construction, the Contractor shall notify the City for a pre-construction meeting.

2. Work shall be performed only by licensed and bonded contractors with a demonstrated experienced in laying public sewer mains of the type being proposed for construction.

3. Prior to any work being performed, the Contractor shall contact the Public Works Superintendent or City Engineer to set forth his proposed schedule.

4. Contractor shall obtain approval of materials to be used from the City prior to ordering or delivery of materials.

5. Sewer main shall be laid only in dedicated street right-of-way or easements shown on preliminary plats or which have been exclusively granted to the City. A street is normally not officially recognized until the plat, which created it has been filed (recorded) with the County Auditor.

6. The sewer main shall run parallel to and 5 feet southerly or westerly of street centerline where possible. The sewer main shall maintain a minimum 10 foot horizontal separation from proposed or existing water mains.

7. The maximum distance between manholes shall be 400 feet unless specifically approved otherwise by the City Engineer.

8. The allowable cover (finished grade) for the various types of pipe are:

PVC Pipe:	3' to 25'
D.I. Pipe (CL 52):	<3' (if allowed)
	25' & above
	Slopes of 18 percent or greater

All pipe shall have a minimum of 36 inches of cover (18 inches in the case of a side sewer on private property). The City reserves the right to require a minimum of three feet of cover unless topography, existing facilities or other future improvements prohibit this minimum cover for installation.

9. The minimum slope for 8-inch gravity mains shall be 0.5% (except the minimum slope for dead end runs shall be 1.0% for 8-inch gravity mains) and the minimum slope for 6-inch side sewer laterals shall be 2.0%.

10. All side sewer laterals shall be of the same material as the main line.

11. Each side sewer lateral shall be equipped with a 6" x 6" tee, with an approved water-tight cap, located adjacent to, but within, the public right-of-way, to be utilized as a clean-out. When required by the City's Inspector and/or City Engineer, a watertight six-inch capped stub shall be installed which extends vertically from the 6" x 6" tee to within 18 inches of finished grade.

12. Each side sewer lateral shall have an approved water-tight cap at the termination of the stub, it shall be adequately "blocked" to satisfactorily resist the air pressure testing.

13. Each side sewer lateral shall have a 12-foot long 2" x 4" wood "marker" at the termination of the stub. The "marker" shall extend from the bottom of the trench to above finished grade. Above the ground surface, it shall be painted "white" with "S/S" and the depth, in feet, stenciled in black letters 2-inch high.

14. Front lot corners shall be staked by a surveyor prior to construction for side sewer tee location(s).

15. Side sewers shall generally be located at the lowest property corner and located a minimum of 10 feet from the side lot line and extend a minimum of 10 feet past the street right-of-way line (or property line).

16. Side sewer connections if allowed directly into manholes shall be constructed to match the sewer main crown (outlet) and the manhole channeled accordingly.

17. Manholes, where sewer extension may occur, shall be provided with knock-outs and channeled accordingly.

18. Manholes shall be provided with a 0.10 foot drop across the channel. Prechanneled manholes are not allowed.

19. Locking lids shall be provided for all manholes located outside pavement areas and all manhole lids shall have the word "sewer" cast integrally onto its surface. See Standard Detail.

20. Concrete collars shall be placed around all frames per the Standard Detail for manholes located in non-paved areas.

21. Pipe connections to manholes shall be as follows:

    PVC Pipe: Cast or grout a watertight manhole coupling (see detail) into manhole wall.

    D.I. Pipe: Bell and spigot joint or flexible coupling, either shall be 12" maximum distance from manhole wall.

    PVC and D.I. pipe, optional: Core the manhole and connect sewer pipe with a water-tight flexible rubber boot in manhole wall, Kor-N-Seal boot or equal.

22. Provide the City's Engineer and City Inspector a copy of the cut sheets prior to construction.

23. Pipe trenches shall not be backfilled until pipe and bedding installation have been inspected and approved by the City's Inspector.

24. Final air testing shall not be accepted until after the finished paving is accomplished, all other underground utilities have been installed, and the lines have been flushed, cleaned, and deflection tested.

25. Manhole rim and invert elevations shall be field verified after construction by the Developer's engineer(s) and the "record" drawings individually stamped by a Washington State licensed professional engineer or surveyor who shall attest to the fact that the information is correct.

26. All commercial, industrial, or school food establishments shall be equipped with an approved grease interceptor. The grease interceptor shall be located to facilitate inspection and maintenance.

7.4 MATERIALS

A. Sewer Mains, Laterals and Force Mains

Gravity PVC pipe (15" diameter and smaller) shall be a minimum Class SDR 35 and be manufactured in accordance with ASTM D3034. The pipe and fittings shall be furnished with bells and spigots, which are integral with the pipe wall. Pipe joints shall use flexible elastomeric gaskets conforming to ASTM D3212. Nominal laying lengths shall be 20 feet and 13 feet.

The ductile iron pipe shall conform to ANSI/AWWA C151/A21.51-91 Standards, and current amendments thereto, except the ductile iron pipe shall be thickness Class 52 for gravity sewers and Class 52 for force mains. Grade of iron shall be a minimum of 60-42-10. The pipe shall be cement lined to a minimum thickness of 1/16 inch, and the exterior shall be coated with an asphaltic coating. Each length shall be plainly marked with the manufacturer's identification, year case, thickness, class of pipe and weight. Note: Force mains shall be constructed of ductile iron.

Type of joint shall be mechanical joint or push-on type, employing a single gasket, such as "Tyton," except where otherwise calling for flanged ends. Bolts furnished for mechanical joint pipe and fittings shall be high strength ductile iron, with a minimum tensile strength of 50,000 psi.

Restrained joint pipe, where required shall be push-on joint pipe with "Fast Tight" gaskets as furnished by U.S. Pipe or equal for 12-inch diameter and smaller pipe and "TR FLEX" as furnished by U.S. Pipe or equal for 16-inch and 24-inch diameter pipes. Mechanical joint pipe with retainer glands (grip rings) as manufactured by "Romac" may also be required at the discretion of the City. The restrained joint pipe shall meet all other requirements of the non-restrained pipe.

All pipe shall be jointed by the manufacturer's standard coupling, be all of one manufacturer, be carefully installed in complete compliance with the manufacturer's recommendations.

All fittings shall be short-bodied, ductile iron complying with applicable ANSI/AWWA C110 or C153 Standards for 350 psi pressure rating for mechanical joint fittings and 250 psi pressure rating for flanged fittings. All fittings shall be cement lined and either mechanical joint or flanged, as indicated on the Plans.

Fittings in areas shown on the Plans for restrained joints shall be mechanical joint fittings with a mechanical joint restraint device. The mechanical joint restraint device shall have a working pressure of at least 250 psi with a minimum safety factor of 2:1 and shall be EBAA Iron, Inc., MEGALUG, or ROMAC "Grip Ring", as required and approved by the City Engineer.

All couplings shall be ductile iron mechanical joint sleeves.

The sewer pipe, unless otherwise approved by the Public Works Director and/or City Engineer, shall be laid upgrade from point of connection on the existing sewer or from a designated starting point. The sewer pipe shall be installed with the bell end forward or upgrade. When pipe laying is not in progress, the forward end of the pipe shall be kept tightly closed with an approved temporary plug. Wherever movable shoring (steel box) is used in the ditch, pipe shall be restrained by use of a winch mounted in the downstream manhole and a line of sufficient strength threaded through the pipe and set tight before each move. Any indication that joints are not being held shall be sufficient reason for the City to require restraints, whether or not movable shoring is being used.

All pipe shall be laid in straight lines and at uniform rate of grade between manholes. Variance from established line and grade shall not be greater than 1/2 inch, provided that such variation does not result in a level of reverse sloping invert; provided, also, that variation in the invert elevation between adjoining ends of pipe, due to non-concentricity of joining surface and pipe interior surfaces, does not exceed 1/64 inch per inch of pipe diameter, or 1/2 inch maximum. Any corrections required in line and grade shall be reviewed with the City Utilities Superintendent and/or City Engineer and shall be made at the expense of the Developer.

All extensions, additions and revisions to the sewer system, unless otherwise indicated, shall be made with sewer pipe jointed by means of a flexible gasket, which shall be fabricated and installed in accordance with the manufacturer's specifications.

All joints shall be made up in strict compliance with the manufacturer's recommendations and all sewer pipe manufacture and handling shall meet or exceed the ASTM and CPAW recommended specifications, current revisions.

Pipe handling after the gasket has been affixed shall be carefully controlled to avoid disturbing the gasket and knocking it out of position, or loading it with dirt or other foreign material. Any gaskets so disturbed shall be

removed, cleaned, relubricated if required, and replaced before the rejoining is attempted.

Care shall be taken to properly align the pipe before joints are entirely forced home. During insertion of the tongue or spigot, the pipe shall be partially supported by hand, sling or crane to minimize unequal lateral pressure on the gasket and to maintain concentricity until the gasket is properly positioned. Since most flexible gasketed joints tend to creep apart when the end pipe is deflected and straightened, such movement shall be held to a minimum once the joint is home.

Sufficient pressure shall be applied in making the joint to assure that it is home, as described in the installation instructions provided by the pipe manufacturer. Sufficient restraint shall be applied to the line to assure that joints once home are held so, until fill material under and alongside the pipe has been sufficiently compacted. At the end of the work day, the last pipe laid shall be blocked in an effective way to prevent creep during "down time."

For the joining of dissimilar pipes suitable adapter couplings shall be used which have been approved by the City Inspector and/or the Engineer.

All gravity sewer pipe shall be bedded from a depth of 4 inches below the pipe to 8 inches above the pipe and ductile iron gravity sewer pipe shall be bedded from a depth of 4 inches below the pipe to the springline of the pipe. The bedding material shall extend across the full width of the trench and shall be compacted under the haunches of the pipe.

Special concrete bedding shall consist of a pipe cradle constructed of Class 3000 psi Portland cement concrete. The bottom of the trench shall be fully compacted before the placement of pipe cradle. The Contractor shall protect pipe against flotation and disturbing the horizontal alignment of the pipe during the pouring of the concrete.

Clay or Controlled Density Fill (CDF) dams shall be installed across the trench and to the full depth of the granular material in all areas of steep slopes, stream crossings and wetland to prevent migration of water along the pipeline.

All backfill shall be placed and compacted in accordance with City, County, or State requirements as may be applicable and copies of the compaction results shall be provided to the City Engineer.

B. Manholes

Manholes shall be of the offset type and shall be precast concrete sections with either a cast in place base, or a precast base made from a 3,000 psi structural concrete. Joints between precast wall sections shall be confined O-ring or as otherwise specified.

For connections to existing systems, a concrete coring machine, suitable for this type of work, shall be utilized in making the connection. The existing manhole shall be rechanneled as required. The new pipe connection shall be plugged (water tight) until the new pipe system has been installed and approved. The Contractor shall be responsible for any existing defects in the existing manhole unless these defects are witnessed by a representative of the City prior to any work being performed to make the connection. The Contractor shall be required to remove any and all deleterious material in the existing manhole and downstream reaches as a result of his/her work.

The minimum diameter manhole shall be 48 inches to a depth of 20 feet, and 54 inches for depths greater than 20 feet. The City may require an increased manhole diameter for future connections.

1) Manhole Sections

Manhole sections shall be placed and aligned so as to provide vertical sides and vertical alignment of the ladder steps. The completed manhole shall be rigid, true to dimension, and be water tight. Rough, uneven surfaces will not be permitted.

The mortar used between the joints in the precast sections and for laying manhole adjusting bricks shall be composed of non-shrink grout, Thoroc or equal. All joints and pick holes shall be wetted and completely filled with grout, smoothed both inside and outside to insure water tightness.

2) Manhole Steps

Manhole steps shall be polypropylene, Lane International Corp. No. P13938 or equal. Ladders (maximum 3 foot length) shall be polypropylene Lane International Corp. or equal, and shall be compatible with steps.

3) Grade Adjustment

Where work is located in public right of way, not less than 18 inches or more than 26 inches shall be provided between the top of the cone or slab and the top of the manhole frame.

4) Channels

Channels shall be field poured and made to conform accurately to the sewer grade and shall be brought together smoothly with well rounded junctions, satisfactory to the City Inspector. The channels shall be field poured after the inlet and outlet pipes have been laid and firmly grouted into place at the proper elevation. Allowances shall be made for a 0.1' drop in elevation across the manhole in the direction of flow. Channel sides shall be carried up vertically from the invert to three-quarters of the diameter of the various pipes. The concrete shelf shall be warped evenly and sloped 3/8 inch per foot to drain. Rough, uneven surfaces will not be permitted. Channels shall be constructed to allow the installation and use of a mechanical plug or flow meter of the appropriate size.

5) Drop Manholes

Drop manholes shall, in all respects, be constructed as a standard manhole with the exception of the drop connection as shown in the details.

6) Lift Holes and Steel Loops

All lift holes shall be completely filled with expanding mortar, smoothed both inside and outside, to insure water tightness. All steel loops shall be removed, flush with the manhole wall. The stubs shall be covered with mortar and smoothed. Rough, uneven surfaces will not be permitted.

7) Frames and Covers:

Frames and covers shall be ductile iron. Castings shall be free of porosity, shrink cavities, cold shuts or cracks, or any surface defects, which would impair serviceability. Repair of defects by welding, or by the use of “smooth-on” or similar material, will not be permitted. Frames and covers shall be machine finished or ground on seating surfaces so as to assure non-rocking fit in any position and interchangeability of covers. Frames and covers shall

be provided with three bolt locking lids. Rings and covers shall be positioned so one of the three locking bolts is located over the manhole steps and shall be adjusted to conform to the final finished surface grade of the street or easement to the satisfaction of the City or agent for the City. Manhole frames and covers shall be as manufactured by East Jordan Iron Works, Model 371584, or City approved equal.

C. Side Sewer Lateral

A side sewer lateral is considered to be that portion of a sewer line that will be constructed between a main sewer line and a property line or easement limit line.

All applicable specifications given herein for sewer construction shall be held to apply to side sewer laterals.

Side sewers shall be for a single connection only and be a minimum 6-inch-diameter pipe. Side sewers shall be connected to the tee, provided in the sewer main where such is available, utilizing approved fittings or adapters. The side sewer shall rise at a maximum of 45° and a minimum of 2 percent, from the sewer main.

Where there are no basements, the minimum side sewer depth shall be 6 feet below existing curb line and 5 feet below ground at the property line, except where existing improvements, proposed improvements or topography may dictate additional depth. The elevations of the side sewer connections shall be of sufficient depth to serve all existing and potential future basements.

The Contractor shall provide for each 6 inch side sewer service a 12-foot-long 2-inch x 4-inch wooden post, which extends from the invert of the end of the 6 inch pipe to above the existing ground. The exposed area of this post shall be painted white and shall have selected thereon in 2-inch letters (black paint) “S/S” and shall also indicate the depth of the sewer service stub from finished grade.

Where no tee or wye is provided or available, connection shall be made by machine-made tap and saddle, only with specific written authorization of the City. The City shall review the exact location and material, list in its evaluation.

The maximum bend permissible at any one fitting shall not exceed 45°. The maximum bend of any combination of two adjacent fittings shall not

exceed 45° unless straight pipe of not less than 3 feet in length is installed between such adjacent fittings, or unless one of the fittings is a wye branch with a cleanout provided on the straight leg.

D. Private Side Sewers

Private side sewers are the extension of side sewer laterals located outside of the public rights-of-way or easements granted to the City of Granite Falls.

1) Side sewer pipe located on private property shall be 4 inches (larger if specifically approved by the City), ductile iron or PVC ASTM D3034 pipe, and shall be installed at a 2 percent minimum grade. Construction on private property may be performed by owner, but requires a permit and approval by the City. Side sewer slopes on private property of 1 percent may be approved by the City in special circumstances if the side sewer is constructed with no greater than 22-1/2° bends and a minimum of 3 feet between bends.

2) Pipe shall be bedded with pea gravel or clean free draining sand.

3) Six inch sewer pipe is required in the street right-of-way and shall have a 2 percent minimum grade. Construction in street rights-of-way shall be performed by a licensed side sewer contractor and requires a permit.

4) Side sewer shall be inspected by the City's Representative/ Inspector prior to backfilling. Side sewer shall be plugged and tested in the presence of the City Inspector by filling with water. Leakage rate shall not exceed 0.31 gal./hr. for 4-inch pipe and 0.47 gal./hr. for 6-inch pipe, per 100 feet of pipe.

5) On private property, minimum cover shall be 18 inches over top of pipe from the point, which is 30 inches out from house and continuing to the connection with the City's sewer system. If this depth of bury cannot be achieved due to site constraints Class 52 ductile iron pipe shall be used.

6) Parallel water and sewer lines shall be 10 feet apart horizontally wherever possible and have a vertical separation of 18 inches if a vertical crossing is necessary.

7) No more than 100 feet is allowed between cleanouts. Cleanouts are required for bends equal to or greater than 45°. Cleanout shall be a watertight plugged gasketed tee or wye lateral.

8) All pipe joints shall be rubber gasket type.

9) Provide "grease trap" of a size and type approved by the City at all such locations as may be deemed necessary by the City.

7.5 TESTING GRAVITY SEWERS FOR ACCEPTANCE

The Contractor and/or Developer shall furnish all facilities and personnel for conducting tests under the observation of the City Engineer or City Inspector.

1) Preparation for Testing for Leakage:

The Contractor and/or Developer shall be required, prior to testing, to clean and flush all gravity sewer lines with an approved cleaning ball and clean water. The completed gravity sewer, including side sewer stubs, after completion of backfill and cleaning shall be televised inspected. This will be permitted prior to paving. The sewer shall then be tested by the low pressure air test method and/or an infiltration test but only after all utilities are installed and the project paved. Except, however, that in certain conditions an exfiltration test may be required by the Public Works Superintendent and/or City Engineer.

The first section of pipe not less than 300' in length installed by each crew shall be tested, in order to qualify the crew and/or the material. A successful installation of this first section shall be a prerequisite to further pipe installation by the crew. At the Contractor's option, crew and/or material qualification testing may be performed at any time during the construction process after at least 2 feet of backfill has been placed over the pipe.

Before the test is performed, the pipe installation shall be cleaned. The Contractor shall furnish an inflatable diagonally ribbed rubber ball of a size that will inflate to fit snugly into the pipe to be tested. The ball may, at the option of the Contractor, be used without a tag line, or a rope or cord may be fastened to the ball to enable the Contractor to know and control its position at all times. The ball shall be placed in the last cleanout, or manhole on the pipe to be cleaned, and water shall be introduced behind it.

The ball shall pass through the pipe with only the pressure of the water impelling it. All debris flushed out ahead of the ball shall be removed at

the first manhole where its presence is noted. In the event cemented or wedged debris, or a damaged pipe shall stop the ball, the Contractor and/or Developer shall remove the obstruction, and/or repair any damaged pipe. All visible leaks showing flowing water in pipelines or manholes shall be stopped even if the test results fall within the allowable leakage. The cleaning shall be carried out in such a manner to not infiltrate existing facilities. Precautions shall be taken to prevent any damage caused by cleaning and testing. Any damage resulting shall be repaired by the Contractor and/or Developer at his own expense. The manner and time of testing shall be subject to approval of the City Utilities Superintendent and/or the City Engineer.

2) Low Pressure Air Test:

The sewer pipe shall be tested for leaks through the use of air (unless method "C" and "D" are approved) in the following manner:

Immediately following the pipe cleaning and televised inspection, the pipe installation shall be tested with low pressure air. Air shall be slowly supplied to the plugged pipe installation until the internal air pressure reaches 4.0 pounds per square inch greater than the average back pressure of any ground water that may submerge the pipe. At least two minutes shall be allowed for temperature stabilization before proceeding further.

The rate of air loss shall then be determined by measuring the time interval required for the internal pressure to decrease from 3.5 to 2.5 pounds per square inch greater than the pipe section's average adjacent groundwater back pressure.

The pipeline shall be considered acceptable if the total time of air loss from any section tested in its entirety between manholes, cleanouts or pipe ends does not exceed the following table:

AIR TESTING PERFORMANCE

Length of 8" Pipe (ft)	**Length of 6" Pipe (ft)**								
	0	**50**	**100**	**150**	**200**	**250**	**300**	**350**	**400**
0	0	0:40	1:20	1:58	2:38	3:18	3:58	4:38	5:16
50	1:10	1:50	2:30	3:10	3:48	4:28	5:08	5:48	5:56
100	2:20	3:00	3:40	4:20	5:00	5:38	6:14	6:12	6:08
150	3:32	4:10	4:50	5:30	6:10	6:30	6:26	6:22	6:18
200	4:42	5:22	6:00	6:40	6:44	6:38	6:34	6:30	6:26
250	5:52	6:32	6:48	6:58	6:50	6:44	6:40	6:36	6:32
300	7:02	7:20	7:10	7:02	6:56	6:50	6:44	6:40	6:36
350	7:34	7:22	7:14	7:06	7:00	6:54	6:50	6:44	6:42
400	7:34	7:24	7:16	7:08	7:02	6:58	6:52	6:48	6:44

Test time in minutes and seconds

Test times will be provided by the City Engineer upon request for combinations other than 8-inch mains and 6-inch laterals.

If the pipe installation fails to meet these requirements, the Developer and/or Contractor shall determine at his own expense the source or sources of leakage, and he shall repair (if the extent and type of repairs proposed by the Developer and/or Contractor appear reasonable to the City Engineer) or replace all defective materials or workmanship. The completed pipe installation shall meet the requirements of this low pressure air test or the alternative water exfiltration test before being considered for acceptance.

Plugs used to close the sewer pipe for the air test shall be securely braced to prevent the unintentional release of a plug, which can become a high velocity projectile. Gauges, air piping manifolds and valves shall be located at the top of the ground. No one shall be permitted to enter a manhole where a plugged pipe is under pressure. Air testing apparatus shall be equipped with a pressure release device such as a rupture disk or a pressure relief valve designed to relieve pressure on the pipe under test at 6 psi.

3) Exfiltration Test (if approved by City)

All pipe shall be cleaned before the exfiltration test. Prior to making exfiltration leakage tests, the Developer and/or Contractor may fill the pipe

with clear water to permit normal absorption into the pipe walls; provided however, that after so filling the pipe he shall complete the leakage test within 24 hours after filling. When under test, the leakage allowable shall comply with the provisions that follow:

Leakage shall be no more than 0.15 gallons per hour per inch of diameter per 100 feet of sewer pipe, with a minimum test pressure of 6 feet of water column above the crown at the upper end of the pipe or above the active groundwater table, whichever is higher as determined by the City. The length of pipe tested shall be limited so that the pressure on the invert of the lower end of the section tested shall not exceed 16 feet of water column. For each increase in pressure of 2 feet above a basic 6 feet measured above the crown at the lower end of the test station, the allowable leakage shall be increased by 10 percent.

The Developer and/or Contractor shall furnish all equipment, materials, and labor necessary for making test. The equipment shall be to the approval of the City Public Works Superintendent and/or City Engineer. The manner and time of testing shall be subject to approval of the City Engineer. It shall be the Developer's and/or Contractor's responsibility to determine the level of the water table at each manhole. If leakage exceeds the allowable amount, corrective measures shall be taken and the line then be retested to the satisfaction of the City's designated inspector.

4) <u>Deflection Test</u>

Deflection tests shall be performed on all ASTM D3034 PVC gravity sewer mains by pulling a mandrel through the pipe. The allowable deflection test limit shall be 5.0 percent of the base inside diameter in accordance with APWA test procedures and the nominal mandrel size shown in the following table.

Deflection testing is not required for C-900 PVC or ductile iron pipe or pipe diameters 15 inch and greater.

The sewer lines shall be thoroughly cleaned prior to the deflection test.

B. Testing Force Main

Force main shall be tested using the same procedures as water lines.

7.6 VIDEO TAPING

After the gravity sewer lines have been cleaned, flushed and manhole channeled, the Developer shall provide a complete televised inspection.

The Developer shall perform a complete televised inspection of the sewer pipe and appurtenances and shall provide to the City, a DVD color audio-visual recording of the inspections together with a written log of the television inspection. The camera shall be a pan and tilt type equipped with adequate light and focusing to allow inspection of sewer main, side sewers and full circumference inspection of main line joints and fittings. The City shall determine if the quality of the televising is acceptable.

Immediately prior to the televised inspection, the Developer shall run water through each sewer line for 5- to 10-minutes to provide water for detection of any adverse grade sections visible by the presence of ponded water. The camera shall be stopped periodically at the ponded areas and the depth of water shall be measured with a ball of known diameter on the pull line. During the inspection, all tees and other fittings shall be logged as to exact location within 1 percent maximum error in measurement, wherein accuracy is checked with various fittings and the terminating manhole.

The City shall be notified 48 hours prior to any television inspection and this work shall be performed on a schedule to allow the City to witness the inspection.

Any defects in material or installation identified by the television inspection shall be repaired as required by the City at the Developer's expense.

7.7 STATE HIGHWAY CROSSINGS

All state highway and stream crossings shall be encased with a steel casing and ductile iron sleeve, as approved by the City and prevailing regulatory agencies. The welded steel casing shall be of sufficient diameter, size and strength to enclose the sewer pipe and to withstand maximum highway or railroad loading. Sizing and wall thickness of casing is subject to approval by the City Engineer. Sand backfill or grout fill between the casing and the sewer pipe shall be required. The sewer pipe shall be restrained joint or continuous welded pipe within the casing pipe. In order to prevent the sand from being washed from the casing the ends of the casing shall be bricked and cemented after installation, backfill and testing of the pipe are completed. The ductile iron sleeve shall be completed with restrained joints within the casing.

7.8 STREET PATCHING AND RESTORATION

See Sections 5.18, 5.19, and 5.20 for requirements regarding street patching and trench restoration.

7.9 EROSION CONTROL

The detrimental effects of erosion and sedimentation shall be minimized by conforming with the following general principles:

A. Soil shall be exposed for the shortest possible time.
B. Reducing the velocity and controlling the flow of runoff.
C. Detaining runoff on the site to trap sediment.
D. Releasing runoff safely to downstream areas.

In applying these principles, the Developer and/or Contractor shall provide for erosion control by conducting work in workable units; minimizing the disturbance to cover crop materials; providing mulch and/or temporary cover crops, sedimentation basins, and/or diversions in critical areas during construction; controlling and conveying runoff; and establishing permanent vegetation and installing erosion control structures as soon as possible.

1. Trench Mulching

   Where there is danger of backfill material being washed away due to steepness of the slope along the direction of the trench, backfill material shall be compacted and held in place by covering the disturbed area with straw and held with a covering of jute matting or wire mesh anchored in place.

2. Cover-Crop Seeding

   A cover crop shall be sown in all areas excavated or disturbed during construction that were not paved, landscaped and/or seeded prior to construction. Areas landscaped and/or seeded prior to construction shall be restored to their original or superior condition. Cover-crop seeding shall follow backfilling operations.

   The Developer and/or Contractor shall be responsible for protecting all areas from erosion until the cover crop affords such protection. The cover crop shall be reseeded if required and additional measures taken to provide protection from erosion until the cover crop is capable of providing protection.

During winter months, the Contractor may postpone seeding, if conditions are such that the seed will not germinate and grow. The Developer and/or Contractor will not, however, be relieved of the responsibility of protecting all areas until the cover crop has been sown and affords protection from erosion.

The cover crop shall be sown at a rate of 10 to 15 pounds of seed per acre using a hand or power operated mechanical seeder capable of providing a uniform distribution of seed.

7.10 ADJUSTMENT OF NEW AND EXISTING UTILITY STRUCTURES TO GRADE

This work consists of constructing and/or adjusting all new and existing utility structures encountered on the project to finished grade.

1. Asphalt Concrete Paving Projects

On asphalt concrete paving projects, the manholes shall not be adjusted until the pavement is completed, at which time the center of each manhole lid shall be relocated from references previously established by the Developer and/or Contractor. The pavement shall be cut as further described and base material removed to permit removal of the cover. The manhole shall then be brought to proper grade.

Prior to commencing adjustment, a plywood and visqueen cover as approved by the City Inspector shall be placed over the manhole base and channel to protect them from debris.

The asphalt concrete pavement shall be cut and removed to a neat circle, the diameter of which shall not exceed 48 inches or 14 inches from the outside diameter of the ductile iron frame, whichever is smaller. The ductile iron frame shall be brought up to desired grade, which shall conform to surrounding road surface.

Adjustment to desired grade shall be made with the use of concrete or bricks. No cast or ductile iron adjustment rings will be allowed. An approved class or mortar (one part cement to two parts of plaster sand) shall be placed between manhole sections; adjustment rings or bricks and ductile iron frame to completely fill all voids and to provide a watertight seal. No rough or uneven surfaces will be permitted inside or out. Adjustment rings or brick shall be placed and aligned so as to provide vertical sides and vertical alignment of manhole steps and ladder.

Check manhole specifications for minimum and maximum manhole adjustment and step requirements. Special care shall be exercised in all operations in order not to damage the manhole, frames and lids or other existing facilities.

As soon as the street is paved past each manhole, the asphalt concrete mat shall be scored around the location of the manhole, catch basin, meter boxes or valve box. After rolling has been completed and the mat has cooled, it shall be cut along the scored lines. The manholes, catch basins, meter boxes and valve boxes shall then be raised to finished pavement grade and the annular spaces filled with cement concrete to within 1-1/2 inches of the finished grade. The remaining 1-1/2 inches shall be filled with hot mix asphalt concrete (PG 58-22) to give a smooth finished appearance. See detail in Project Plans.

After pavement is in place, all joints shall be sealed with hot asphalt cement (AR 4000W). A sand blanket shall be applied to the surface of the AR 4000W hot asphalt cement binder to help alleviate "tracking."

Asphalt concrete patching shall not be carried out during wet ground conditions or when the ambient air temperature is below 50°F. Asphalt concrete mix shall be at required temperature when placed. Before making the asphalt concrete repair, the edges of the existing asphalt concrete pavement and the outer edge of the casting shall be tack coated with hot asphalt cement. The remaining 2 inches shall then be filled with hot mix asphalt concrete and compacted with hand tampers and a patching roller.

The completed patch shall match the existing paved surface for texture, density and uniformity of grade. The joint between the patch and the existing pavement shall then be carefully painted with hot asphalt cement or asphalt emulsion and shall be immediately covered with dry paving sand before asphalt cement solidifies. All debris such as asphalt pavement, cement bags, etc., shall be removed and disposed of by the Developer and/or his Contractor.

Prior to acceptance of a project, manholes shall be cleaned of all debris and foreign material. All manhole steps and ladders shall be cleaned free of grout. Any damage occurring to the existing facilities due to the Developer's and/or Contractor's operations shall be repaired at his/her own expense.

2. Adjustment of Manholes in Easements

Manholes in easement areas shall be adjusted to insure drainage away from the manhole frame and cover. The manhole frame and cover shall be set approximately 0.1 foot above finished grade. Concrete collars shall be set about the structure, as detailed herein, in all non-paved areas.

3. Adjustment of Valve Box Castings

Adjustment of valve box castings (force main valving) shall be made in the same manner as for manholes.

7.11 SANITARY SEWER LIFT STATIONS - SUPPLEMENTAL STANDARDS

1. GENERAL

This section is intended to present information and provide an outline of the minimum general standards to be accomplished in planning a sewage lift station installation within the City of Granite Falls service area. Incorporation of a sewage lift station is subject to City review and approval on a case-by-case basis. It is the City's policy to minimize the number of lift stations that must be operated by the City, as well as to minimize the use of lift stations where other means of serving an area exist or have been provided for in the City's comprehensive plan.

Lift stations shall only serve those properties which cannot otherwise be served by conventional gravity sewers and shall be approved on an individual basis by the City. All lift stations shall be designed in strict conformance with the latest edition of the Washington State Department of Ecology's Criteria for Sewage Works Design.

All new sanitary sewer lift stations shall be Smith & Loveless vacuum prime system. If site constraints, such as large suction lift and high groundwater conditions, prohibit the reasonable installation of a vacuum prime system the lift station shall be a Smith & Loveless submerged inlet (wet pit – dry pit) system. All stations shall be duplex stations with backup generator power connected to the station through an automatic transfer switch. The developer shall pay all costs for the design, construction and integration of the lift station and the cost to integrate lift station operations at the City's master telemetry system at the wastewater treatment plant to allow real time monitoring of the lift station. It shall be the developer's responsibility to ensure that the lift station telemetry system communicates with the City's telemetry system.

The lift station standards contained herein are intended to apply to a typical duplex sewage lift station within the typical size range for developer-constructed stations and to express the City's general policy with regard to standardization of lift station design and operation. At the City's discretion, stations with non-typical service requirements, such as high flows, high head pressures, flow monitoring, multiple pump operation, critical service or unusual site constraints, may be subject to additional or alternative design requirements.

Due to the inherent complexity of lift station design, and the associated health and safety risks, the lift station design shall be prepared by a professional engineer registered in the State of Washington and with demonstrable experience in lift station design. At the request of the City, the Developer shall provide a resume for the proposed lift station designer, listing similar projects designed by that individual, with references and phone numbers. Once the lift station design has been approved by the City, the design engineer shall remain responsible for all construction-related engineering duties, including the coordination of submittals and shop drawings, and the preparation of field change requests, record drawings and maintenance and operation materials. Engineering responsibilities shall not be reassigned by the Developer without the City's approval.

2. DESIGN CALCULATIONS / DESIGN REPORT:

The City, at its option, may direct the City's Engineer to prepare a feasibility study, at the Developer's expense and under a separate agreement with the Developer, prior to granting conceptual approval for the use of a lift station. This feasibility study will address specific design and planning issues identified by the City as necessary for evaluation of the proposal.

The City's Engineer will determine the service area and the associated design flows, consistent with the City's current Comprehensive Plan, at the Developer's expense. The design service area will include the Developer's plat boundary area (or other proposed service area) as well as adjacent and potential future service areas. Documentation regarding the number and type of sewer connections proposed by the Developer shall be furnished to the City's Engineer in sufficient detail to permit the City's Engineer to complete the flow determination.

Once the service area and design flows have been established, the Developer shall then be responsible for providing design calculations and

a design report to assure that the lift station installation is sized to serve the overall sewage flows generated within the potential service area.

The effects of the minimum flow conditions shall be estimated to ensure that retention of the sewage in the wet well will not create a nuisance and that pumping equipment will not operate too infrequently. The wet well shall be sized to meet or exceed the pump motor manufacturer's recommendations for the minimum allowable time period between motor starts with the largest pump out of service, the net positive suction head, and the submergence of the pump suctions.

Lift station capacity shall be sufficient to convey the anticipated peak hourly flow into the station. The available capacity of the receiving sewer shall be adequate for the maximum lift station capacity. At least two pumping units shall be provided at each lift station installation. The pump(s) shall have sufficient capacity and capability to efficiently handle the peak design flow with the largest pump out of service and to provide a minimum velocity of 3 feet per second velocity in the force main at single pump flow.

The force main shall be sized for a minimum velocity of 3 feet per second and a maximum of 8 feet per second. The minimum diameter of the force main shall be 4 inches, unless otherwise approved by the City's Engineer.

Three copies of the Design Calculations shall be submitted to the City for review. As a minimum, the report shall include:

1. Project description
2. Projected flows
3. Connection point with downstream capacity
4. Wet well sizing
5. Run time calculations based on peak hourly and average annual flows for start-up and ultimate design conditions.
6. Cycle time calculations to verify pump start frequency is within allowable limits, including operation on backup float control
7. Pump station head calculation to establish system curve
8. Pump and impeller selection
9. Force main size, length and material
10. Force main surge pressure calculation, calculated for sudden loss of power with all pumps operating at full speed
11. Generator and fuel supply sizing
12. Buoyancy calculations for buried structures

The above calculations and evaluation shall be provided for City review and approval in the form of a design report prior to, or together with, the plans for the developer extension. The report shall be stamped by a professional engineer licensed in the State of Washington.

> *A geotechnical evaluation of the proposed site shall be provided by the Developer, and shall be stamped by a licensed geotechnical engineer. Site or project characteristics to be evaluated shall include, but are not necessarily limited to: steep slopes; groundwater; erosion hazards; unusual drainage conditions; unstable soils; proposed construction on fill; proposed retaining wall construction; wet weather construction; recommendation for backfill, subgrade and foundation materials; and a determination of seismic potential in accordance with local building code. The geotechnical evaluation may be submitted as a supplement to the geotechnical report for the underlying plat, and shall include a minimum of one boring at the proposed wet well/dry well site to a minimum depth of 15 feet below the proposed subgrade elevation.*

Following submittal of the design report, the City's Engineer will determine the type of facilities required to mitigate odor at the wet well vent and the force main discharge, consistent with City policy and County and City requirements. The odor mitigation determination will be performed by the City's Engineer at the Developer's expense and will include an evaluation of odor potential and a listing of facilities, equipment, design parameters, and miscellaneous details to be incorporated into the lift station design. Documentation, to include the proposed force main alignment, size and profile, shall be furnished to the City's Engineer in sufficient detail to permit the City's Engineer to complete the odor determination.

3. PERMITTING:

The Developer shall furnish all required permits and variances except those specifically named by the City to be furnished by the City, together with the completed SEPA checklist when required, and shall be responsible for meeting all applicable City, County, State and Federal requirements, including but not limited to the following:

1. Conditional Use Permit
2. Shoreline Management Permit
3. SEPA Determination
4. Fill & Grade Permit
5. Right-of-Way Permit

6. Building Permit
7. Electrical Permit
8. Compliance with Landscaping, Odor, Seismic and Noise Ordinances
9. Corps of Engineers 404 Permit

At the City's discretion, the Developer shall provide written determination of permit applicability from agencies with potential jurisdiction.

4. DESIGN PLANS:

Once the Design Calculations/Design Report have been approved by the City and the City Engineer has completed the odor mitigation determination, the Developer shall submit to the City for review and approval complete sewage lift station plans and design that provide for the lift station, electrical service, telemetry/SCADA, control panel, pump controls, and auxiliary generator/transfer switch together with all accessories for a complete, automatically operating installation. Design plans for the gravity sewer and the force main shall be submitted concurrent with the lift station plans. Plans shall be prepared by a professional engineer with experience in lift station design, as further discussed in these Standards.

Design material and drawings shall provide all civil, mechanical and electrical details and shall be consistent with all applicable codes and regulations, and good engineering practice. Drawings shall be prepared in accordance with the City's General Drafting Standards and shall show, at a minimum:

- Locations of proposed and existing streets, rights-of-way, sewers and other utilities in the vicinity of the proposed lift station.

- All known existing structures, both above and below ground, that might interfere with the proposed construction, particularly buildings, water mains, gas mains, storm drains, overhead and underground power lines, telephones lines, and television cables.

- Site layout for the lift station installation at a minimum scale of 1"=10', clearly showing the level of detail required in these standards. The site layout shall show the locations in plan view of all existing and proposed structures, piping, utilities, equipment, easements, property boundaries, slabs, exterior lighting, fencing, access driveway(s), landscaping, drainage and surface restoration. Piping shall be labeled as to type, material and size, and with all

special fittings and connections identified. Routing of buried electrical conduits shall be provided on the site layout or on a separate electrical layout and shall identify conduit size and material type, stub up locations, and the number, size, type and general termination location of all conductors. Where the site layout is too crowded to clearly indicate the information required at the minimum scale, the scale shall be enlarged and/or detail views furnished.

Relative locations of structures and equipment shall be identified and dimensioned on the site layout or associated details, based on preliminary equipment sizing if necessary, and shall specifically allow for adequate clearances for opening of doors, lids and hatches; clearance for code requirements (e.g., Labor and Industries, International Building Code), and reasonable access for repairs and maintenance. Where exact equipment dimensions are not known at the time of design, or where the dimensions are subsequently revised from those assumed during design, the Developer's engineer shall provide a scaled, dimensioned drawing of the lift station layout after submittals have been approved, for City review and approval.

- Mechanical plans for the location and orientation of all mechanical equipment and all connections. Mechanical plans shall include plan and section views of the wet well, inlet valve vault and emergency bypass valve vault, scaled and dimensioned, together with appropriate details, to show: size, number, type, location, elevation, orientation, connection and bracing of the suction piping, discharge piping, bubbler tubing, float switches, drains and vents; pump (level) control elevations; hatch type and location; ladder type and location; and grout. Mechanical plans shall also include any required facilities for odor and surge mitigation.

- Structural plans or details for the required overhead shelter(s), housekeeping pads, equipment pads and any proposed retaining walls.

- Site grading plan and a minimum of two representative cross sections through the lift station site showing site grading and significant buried and above grade structures.

- Electrical plans and details to include: location of all control, instrument and distribution system equipment and components; electrical schematic for 3-phase power modified to show number,

type and size of conduits and conductors; telemetry/SCADA block diagram showing number, type and size of conduits and conductors; elementary, connection, and interconnection wiring diagrams for electrical controls; electrical rack layout; telemetry panel layout; routing in plan view of all buried electrical conduits; and all equipment and installation detail.

Any specifications created for use by the installing contractor shall be provided to the City for review and approval at the time that plans are submitted.

All plan sheets shall be stamped by a professional engineer registered in Washington State. The engineer's stamp provided on the electrical and structural plan sheets shall be that of a registered electrical engineer and structural engineer, respectively.

5. SITE PLAN:

As part of the plan set, the Developer shall furnish a site layout for the lift station installation. The site plan shall clearly show the existing and proposed facilities as specified herein.

The lift station shall be located as far as practicable from existing or proposed built-up residential areas, and an asphalt concrete access driveway shall be provided. Sites for sewage lift stations shall be of sufficient size for future expansion or addition, if applicable.

The lift station site shall meet the following standards:

1. Level yard area, 30 feet x 50 feet minimum exclusive of driveway, off street parking, landscaping, and required buffers. The long axis shall be aligned with the access driveway. Maximum yard area slope shall be 3 percent.

2. Access via dedicated right-of-way or perpetual easement. Access points shall be constructed in accordance with City, County or State standards, as applicable, including driveway slope and site distance.

3. Driveway width 12-foot minimum and with sufficient length to allow one service vehicle to pull off the street to open the vehicle access gate. Driveway length shall not exceed 50 feet except as approved with conditions by the City's Engineer.

4. Off street parking for a minimum of one 1-ton service vehicle, without impacting vactor access, and in accordance with City and County requirements. The site shall be configured to allow a 1-ton service vehicle to turn around off the street.

5. Vactor access to the wet well, head-in, subject to the following grade limits:

1.	Maximum longitudinal slope:	5%
	Maximum side slope:	3%
2.	Max. combined longitudinal and side slope	5%
3.	Maximum reach from truck to wet well:	5 feet

The easement for the lift station site shall be submitted to the City for review prior to construction of the lift station. Lift station sites not located within the plat boundary shall be deeded to the Lake Stevens Sewer City. At a minimum, the site layout shall provide for the following:

1. Lift station, including wet wells, influent valving and emergency bypass pump connection.
2. Auxiliary power (standby engine generator and fuel supply), including automatic transfer switch
3. Electrical service and distribution
4. Programmable Logic Controller (PLC) based control system that is from the same Manufacturer as the WWTP PLC. The PLC will control pump operation in a lead/lag configuration via the 4-20mA output signals that represents wet well level from duel (two) pressure transducers.
5. Telemetry/SCADA
6. 3/4-inch water service
7. Odor control, as determined by the City's Engineer
8. Surge control as required by the surge analysis
9. Cuts and fills to provide level site for maintenance.
10. Asphalt or Portland cement concrete pavement for access and maintenance areas.
11. Six-foot-high chain link fence enclosing the site, with pedestrian and equipment access gates.
12. Overhead weather protection for all electrical panels normally accessed by City personnel for system maintenance and operation.
13. Area lighting as required by the City.
14. Site drainage in accordance with City or County standards.
15. Adequate clearances between equipment items and other facilities as required by all applicable codes, and as necessary for reasonable access for maintenance and repair, including access through all doors, hatches and lids.

16. Separation from easements for stormwater detention facilities and other major utility structures.

6. GENERAL REQUIREMENTS:

1. Prior to construction, the design report and lift station plans shall be reviewed and approved in accordance with City standards and Department of Ecology design guidelines by the City's Engineer.

2. Prior to construction, the Contractor shall request and attend a preconstruction meeting with the City and the City's Engineer.

3. Work shall be performed only by contractors experienced in the installation of mechanical, electrical and sewer facilities and on the City's list of approved contractors. All work shall be performed by or under the supervision of a qualified licensed and bonded general contractor.

4. Prior to any work being performed, the Contractor shall contact the City's Engineer to set forth his proposed schedule.

5. The Contractor shall attend regular meetings with the City and the City's Engineer, on a weekly, biweekly or monthly basis at the City's option, to coordinate technical and administrative aspects of the project.

6. The Contractor shall obtain approval of materials to be used from the City's Engineer prior to ordering of materials. Product submittals shall include manufacturer's literature (marked to designate included options and features and to exclude all extraneous information), shop drawings and diagrams (scaled and dimensioned where appropriate), color and material samples, design calculations (where required in addition the design report), and test reports.

7. Lift stations shall be constructed only in easements that have been granted to the City or in property that has been deeded to the City, as clarified elsewhere in these standards. Sewers may be laid within a plat or property identified in the developer extension agreement, subject to dedication of appropriate rights-of-way and recording of appropriate easements at the time the plat and/or warranty bill of sale is filed with the County Auditor.

8. Construction of sewer pipes and buried facilities associated with lift station construction shall be in accordance with Section II of these standards.

9. Sewage control valves shall be resilient seat gate valves, AWWA C 515 ductile iron body with epoxy lining, M&H, Mueller or equal.

10. Sewage control valves shall be installed in vaults (or manholes); direct burial of valves is not permitted. Sewer piping within valve vaults shall be ductile iron piping, constructed in accordance with Section II of these standards. Each valve vault shall be equipped with steps or ladder, H-20 load rated hatch, and a drain (2-inch minimum PVC drain to the wet well with duckbill check valve). Vaults shall provide adequate access for equipment maintenance and removal.

11. All metal fabrication shall be subject to City review and approval with respect to materials, fabrication method, coating, installation and testing. Provide shop drawings for review. Structural components (other than fasteners) subject to emersion, intermittent emersion, or corrosive environments shall be 316 stainless steel or 6061-T6 aluminum alloy. Where structural steel (ferrous metal) is exposed to weather, it shall be zinc coated or galvanized by the "hot-dip" method in accordance with ASTM A123. Fasteners subject to submersion, intermittent submersion, splash or corrosive environments, or for use with aluminum items, shall be 316 stainless steel. Ferrous metal fasteners shall be zinc coated or galvanized. Concrete anchor bolts shall be stainless steel, and where subject to submersion, intermittent submersion, or corrosive environments shall be adhesive type set in epoxy.

12. Unspecified Portland cement concrete for use in construction of reinforced concrete pads and foundations shall contain 6 sacks of ASTM C150 Type II cement per cubic yard of concrete, shall contain an approved air-entraining admixture, shall contain no chloride admixtures and shall have a minimum 28-day compressive strength of 3,500 psi. Provide a concrete mix design for City review and approval. Reinforcing steel shall consist of deformed bars or welded wire fabric as shown on the approved plans. Curing compound shall be liquid type membrane conforming to ASTM C309, Type I, Class A and B.

13. Cement grout for ballast and fillets shall be a sand and Portland cement mix only, shall contain 6.5 sacks of ASTM C150 Type II cement per cubic yard of grout, and shall have a 28-day compressive strength of 2,500 psi.

14. Non-shrink grout used for pipe sleeves, equipment bases and similar applications shall be Masterflow 928 by Master Builders or equivalent product by W.R. Grace.

15. A single roof structure shall be furnished to provide overhead weather protection for all electrical panels normally accessed by City personnel for system maintenance and operation, including the generator panel, the pump panel and the electrical equipment rack. The roof structure shall extend a minimum of 30 inches horizontally beyond the face of electrical panels, shall allow for equipment removal and replacement, shall allow for vertical vactor access to the wet well trough, and shall include overhead lighting sufficient for operation of all equipment panels and performance of typical maintenance and repair. Structural components shall be steel and shall be hot-dipped galvanized after fabrication. Roofing shall be standing seam metal roofing, 24 ga. minimum, zinc coated to G-90 standard and painted with Kynar 500 paint system or equal, color to be approved by the City. Gutters and downspouts to the drainage system shall be provided. Fasteners shall be stainless steel. Structural plans and details shall be stamped by a structural engineer licensed in the State of Washington.

16. A 6-foot-high galvanized chain link fence shall be provided to enclose the site, with vertical vinyl slats in-laid for screening, three strands of barb wire, a 3-foot pedestrian access gate and a 12-foot (minimum) vehicle access gate. Fence shall be Type 1 Class 1 in accordance with WSDOT Standard Specifications 8-12 and 9-16 and Standard Drawings L-2 and L-3. Landscaping may be incorporated on site for screening in lieu of the vinyl slats, with City approval. Galvanized fencing components may be overcoated with polyester powder coating or thermally fused and bonded vinyl, polyester or polyolefin, subject to review and approval of the coating specification by the City.

17. A 1-inch water service shall be provided, with reduced pressure backflow preventer, GFCI protected duplex electrical receptacle, and hose bib installed in an above-grade freeze-protected enclosure on a concrete pad. Piping shall be heat traced and insulated.

Enclosure shall be Hot Box, or equal. Furnish 50 feet of 1-inch heavy-duty rubber hose.

18. Odor control shall be provided where appropriate, as determined by the City, based on an odor mitigation determination to be performed by the City's Engineer.

19. Surge protection for the force main shall be provided where appropriate, and shall typically be provided where surge pressures are anticipated to exceed 100 psi. Surge pressures shall be evaluated for the condition where there is a sudden loss of power to the maximum number of pumps that will be permitted to operate simultaneously. Transient surge pressures shall not be permitted to exceed the rated working pressure of the force main piping.

20. Wet well, vaults and similar buried structures with piped connections shall constructed on undisturbed subgrade, unless otherwise approved with conditions by the City's Engineer. Sewage piping installed between lift station structures shall be ductile iron, constructed in accordance with Section II of these standards. Restrained joints shall be installed on all pressure piping, and on all ductile iron sewage pipe and fittings, including gravity sewers and drains.

21. Buried facilities shall not be backfilled until installation and bedding have been inspected by the City's Engineer.

22. All backfill placed within areas subject to vehicular traffic shall be compacted to 95 percent of modified Proctor maximum dry density per ASTM D1557, or in accordance with Snohomish County, City and/or State requirements, whichever is more stringent. Compaction in other areas shall be to a minimum of 90 percent of modified Proctor maximum dry density or as shown on the plans. Copies of the compaction results shall be provided to the City.

23. Road restoration shall be per Snohomish County, City and/or State design and construction standards. Developer and Contractor shall become familiar with all County, City and State conditions of required permits, and shall adhere to all conditions and requirements.

24. Landscaping shall be in accordance with City requirements, where applicable. Where landscaping is required by City or County

codes, the landscaping plan shall incorporate the following features to the fullest extent allowed:

- Drought tolerant native species
- Fabric weed barrier overlaid with mulch, to minimize weed propagation
- Dense spreading native groundcovers (e.g., Kinnikinnick)
- Compact tree varieties with minimal pruning requirements, located so as to minimize leaf litter, mold propagation on lift station facilities, and potential damage to lift station facilities resulting from uprooting and limb breakage.

25. Installed conditions shall be field verified after construction by the Developer's engineer and the record drawings revised accordingly. Record drawing information shall be as specified in Section I of these standards. The record drawings shall be signed by a Washington State licensed professional engineer, which shall attest to the fact that the information is in accordance with construction records.

26. Following submittal of the approved maintenance and operations materials and record drawings, the City's Engineer shall, at the Developer's expense, prepare a written narrative description of the basic pump station control strategy, including primary and backup controls, pump protection features, associated alarms and initial wet well level set points.

7. FACTORY-BUILT PUMP STATION:

GENERAL

The sewage pump station shall be a Smith & Loveless wet well mounted or buried pump station, as approved by the City. Construction shall be in compliance with O.S.H.A., U.L., A.S.T.M., N.E.C. and other applicable codes and regulations. The station shall be constructed and anchored to comply with current seismic requirements.

The pump station shall be equipped with a minimum of two sewage pumps. The pumps shall have sufficient capacity and capability to efficiently handle the peak design flow with one pump out of service and to ensure a minimum velocity of 3 feet per second in the force main. Design calculations and pump curves to verify the choice of pump and impeller shall be provided with the submittal information. Calculations and curves shall verify that the pumps will operate satisfactorily with all

pumps including the redundant pump operating (in the event that wet well levels or flows temporarily exceed the design range)

The sewage pump station shall be installed in accordance with the manufacturer's recommendations. The sewage pump station manufacturer shall inspect the station during installation. Written confirmation of each visit and recommendations shall be provided to the City.

All pumps shall be factory tested following pump station assembly to ensure that vibration is within the current Hydraulic Institute Standards. Rotating assemblies shall be spin balanced by the pump station manufacturer prior to vibration testing. Factory test results shall be provided to the City prior to station delivery. Following installation of the pump station at the site and prior to startup, the pumps shall be retested for vibration by the pump station manufacturer. Copies of all test results shall be included in the maintenance and operation information.

The sewage pump station manufacturer shall provide training for City personnel at the station site, as described elsewhere in this section.

The sewage pump station manufacturer shall provide four complete copies of maintenance and operation material to the City as described elsewhere in this specification. Maintenance and operation material shall include a complete discussion of pump control strategy in narrative form, including operational troubleshooting procedures, startup and reset procedures, and calibration, setting and testing of level set points, gauges and alarms.

WET WELL MOUNTED STATION (SUCTION LIFT TYPE)

The station shall be Smith & Loveless wet well mounted vacuum primed station complying with the latest edition of Smith & Loveless standard specifications and with the City Standards. The station shall be installed in accordance with the manufacturer's recommendations and as further described herein.

As a minimum, the station shall include the following:

- Vertical, close-coupled, motor driven, vacuum-primed, non-clog pumps
- Resilient seat gate valves (or plug valves) on each discharge; 3-way valves not permitted.
- Internal piping
- Pump station control panel with PLC, pump backup control circuits, and breakers, vacuum pump controls, sewage pump

protection controls, and other controls and alarms (as described below) for mounting external to the pump station,

- Heater with thermostat control
- Ventilating blower with thermostat control
- Priming pumps and appurtenances; discharge exhaust to wet well
- All internal wiring, with welded nipple connections through the enclosure base coaming for rigid conduit entry
- Discharge pipe welded to the base plate; all base plate penetrations within lid enclosure gas tight to permit area above wet well to be unclassified (not classified as Division 1 or Division 2 per NEC)
- Seal off fittings on all conduit penetrations from the pump enclosure through the base plate into the wet well.
- Lid to be insulated, 2 piece design or 1 piece design with hydraulic hood assist
- Paint station with S&L standard mint green epoxy
- Programmable Logic Controller (PLC) based control system that is from the same Manufacturer as the WWTP PLC. The PLC will control pump operation in a lead/lag configuration via the 4-20mA output signals that represents wet well level from duel (two) pressure transducers.
- Each transducer's output signal will be series loop connected with a setpoint controller (Red Lion PAXP with 4-20 mA input and 4-relay output card) that in conjunction with an alternating relay will serve as backup pump control.
- High water alarm contacts from two high level float switches, to also activate redundant PUMP NO. 1 call and redundant PUMP NO. 2 call that is directly powered/connected to the pump starter's control circuit. When the float is tripped its associated pump will start and after the float has reset the pump will continue to run for an adjustable time via a timing relay
- Shelf mounted vacuum prime pumps to be mounted at or above the top of the base enclosure coaming. Valving shall permit either priming pump to be removed without disabling the other.
- Station access limit switch to signal intrusion and operator access
- Intrusion limit switch and alarm contact, with keyed deactivation/activation on time delay
- Full body, lever and spring swing check valve on each pump discharge, mounted in the horizontal position, furnished with standard factory applied epoxy lining
- Check valve limit switch and alarm contact to indicate low flow with time delay, for each pump
- Smoke detector and alarm contact

- Extended warranty – 24 months from start-up or 30 months from time of shipment whichever is first
- Documentation as required to verify that the pump station is in compliance with the N.E.C. and Washington State Department of Labor and Industries requirements
- NEMA 3R GFCI protected duplex receptacle
- Two 1-inch conduit connections in control panel for connection to the telemetry panel.
- Spare parts, labeled with part numbers
- Replacement pump shaft seal assembly, including a full set of gaskets and o-rings (1 ea per pump)
- Pump volute gaskets (2 ea per pump)
- Pump base seal gaskets (1 ea per pump)
- Plexiglass electrode bowl (1 ea per pump)
- Solenoid valve for vacuum system (1 ea per pump)
- Vacuum prime flex tubing (10 ft per pump)
- Vacuum pump for priming system (1 ea per station)
- Ultrasonic prime level sensing kit with relay (1 ea per station)
- Wafer check valve (1 ea per pump)
- Bubbler compressor (1 ea per station)
- Touch up paint kit
- 1/2-inch NPT gauge connection on the discharge header, equipped with pressure gauge (Ashcroft Model 45-1279), roddable diaphragm seal (Red Valve Series 42), two isolation ball valves (one each side of diaphragm seal)

BURIED PUMP STATION (SUBMERGED SUCTION TYPE)

The station shall be a Smith & Loveless Capsular® Underground Pump Station complying with the latest edition of Smith & Loveless standard specifications and with the City Standards. The station shall be installed in accordance with the manufacturer's recommendations and as further described herein.

The station shall be constructed in two major sections, consisting of an entrance tube and a pump chamber. The entrance tube shall be a minimum of 10 feet square, and shall be equipped with a conventional stairway, landings and hand rail. The top of the entrance tube shall be fully enclosed with an integral entry house, incorporating a walk in doorway and equipment removal hatch, lockable to City standards. The pump chamber shall be a minimum of 10 feet wide and 10 feet high, with length as required to house the pumps and associated equipment. Pumps shall be installed not less than 6 feet on center.

Lighting and ventilation shall be included to meet the requirements for a confined space entry.

The station shall be provided with magnesium anodes and test boxes per the manufacturer's recommendations, suitable for mounting on the exterior of the dry well entry house or the electrical rack, as directed by the City.

As a minimum, the station shall include the following:

- Vertical close-coupled, motor driven, non-clog pumps
- Resilient seat gate valve on each pump suction and discharge, furnished with standard factory applied epoxy lining
- 1/2-inch NPT gauge connection on each suction and discharge, equipped with 1/2-inch brass nipple and 1/2-inch isolation ball valve
- 1/2-inch NPT gauge connection on the discharge header, equipped with pressure gauge (Ashcroft Model 45-1279), roddable diaphragm seal (Red Valve Series 42), two isolation ball valves (one each side of diaphragm seal)
- Pump suction elbows each furnished with tapped boss for 1-inch NPT drain fitting, with brass ball valve and flexible tubing to nearest sump
- Full body, lever and spring swing check valve on each pump discharge, mounted in the horizontal position, furnished with standard factory applied epoxy lining
- Internal ductile iron piping with 40 mils DFT ceramic epoxy lining and steel discharge header with 16-20 mils DFT amine-cured epoxy lining
- Temporary indoor-outdoor carpeting on pump chamber floor to protect the painted surface during pump station installation
- Heavy duty synthetic rubber floor mats, to be installed by factory representative immediately prior to startup
- • Pump station control panel with circuit breakers, sewage pump protection controls, and other controls and alarms (as described below) for mounting external to the pump station
- Safety disconnects for each pump with auxiliary HOA switches to allow pumps to be disabled prior to disconnection, and auxiliary contacts to indicate HOA in AUTO position
- Lighting
- Hose bib inside the pump chamber, downstream of the reduced pressure backflow prevention assembly, for wash down

- Duplex sump pumps with automatic discharge through isolation ball valves and dual check valves to a common discharge line
- Ventilation supply and exhaust blowers to provide a minimum of six air changes per hour in the dry well, continuous, while maintaining a positive pressure per electrical code requirements
- Ventilation fail detection with alarm contacts
- Traveling beam with hand operated chain trolley hoist and lifting for pump removal
- All exterior welds to be continuous and watertight
- Dehumidifier
- GFCI protected duplex receptacle in NEMA 4 box for each sump pump and dehumidifier, plus 2 convenience receptacles
- All internal wiring in rigid steel conduits with above-grade entry through the entry house wall
- Protection against corrosion
- Emergency lighting
- Each transducer's output signal will be series loop connected with a setpoint controller (Red Lion PAXP with 4-20 mA input and 4-relay output card) that in conjunction with an alternating relay will serve as backup pump control
- High water alarm contacts from two high level float switches, to also activate redundant PUMP NO. 1 call and redundant PUMP NO. 2 call that is directly powered/connected to the pump starter's control circuit. When the float is tripped its associated pump will start and after the float has reset the pump will continue to run for an adjustable time via a timing relay.
- Station flooding detection and alarm contact
- Station access limit switch to signal intrusion and operator access
- Intrusion alarm contact, with keyed deactivation/activation on time delay
- Operator in trouble button and alarm contact
- Check valve limit switch and alarm contact to indicate low flow with time delay, for each pump
- Smoke detector with alarm contact
- Extended warranty – 24 months from start-up or 30 months from time of shipment, whichever is first
- Documentation as required to verify that the pump station is in compliance with the N.E.C. and Washington State Department of Labor and Industries requirements.
- Structural calculations stamped by a professional structural engineer registered in the State of Washington.
- Spare parts, labeled with part numbers

- Replacement pump shaft seal assembly, including a full set of gaskets and o-rings (1 ea per pump)
- Filter element for the seal filter (1 ea per pump)
- Pump volute gaskets (2 ea per pump)
- Pump base seal gaskets (1 ea per pump)
- Bubbler compressor (1 ea per station)
- Touch up paint kit
- Ductile iron piping with 40 mils DFT ceramic epoxy lining between wet well and station.
- Common reinforced concrete base slab for station and wet well.
- Sump pump piping to go up dry well entry tube and discharge through pipe nipples welded into the entry tube wall.
-

MOTORS

The pump and motor shafts shall be the maximum diameter available for these units.

Pump motors shall be 3-phase, 60-cycle, 480-Volt. Motors larger than 25 hp, or where required by the City, shall be furnished with soft starts, or variable frequency drives equipped with start rated bypass contactors. Where motors are used with VFDs, the motors shall be invertor duty rated and shall meet the applicable requirements of NEMA MG1.

The motors shall have 1.15 service factor and be non-overloading for the full range of the curve unless otherwise approved by the City.

8. WET WELL:

GENERAL

The wet well shall be precast concrete manhole sections and shall conform to manhole specification per Section II of these Standards, as modified herein. Joints between precast wall sections shall be confined O-ring or as otherwise approved.

The wet well shall be provided with polypropylene manhole steps as specified for manholes, with a stainless steel Ladder Up Model 1 safety post.

The wet well shall be checked to ensure all joints are watertight to prevent infiltration and exfiltration of the wet well.

- Programmable Logic Controller (PLC) based control system that is from the same Manufacturer as the WWTP PLC. The PLC will control pump operation in a lead/lag configuration via the 4-20mA output signals that represents wet well level from duel (two) pressure transducers.
-
- Each transducer's output signal will be series loop connected with a setpoint controller (Red Lion PAXP with 4-20 mA input and 4-relay output card) that in conjunction with an alternating relay will serve as backup pump control.
-

Each transducer's output signal will be series loop connected with a setpoint controller (Red Lion PAXP with 4-20 mA input and 4-relay output card) that in conjunction with an alternating relay will serve as backup pump control.

High level alarm float switches (equal in number to the number of pumps) shall be provided in the wet well. Each high level float switch shall function as an independently redundant PUMP ON switch for a pump and is powered/connected directly to the pump starter's control circuit. When the float is tripped its associated pump will start and after the float has reset the pump will continue to run for an adjustable time via a timing relay.

Float switches and pressure transducers shall be located so as to avoid interference by inlet flows, suction piping, bubbler tubing, bracing, steps/ladders, brackets, and other protrusions. Float switches and pressure transducers shall be tethered to a stainless steel cable or chain that is anchored by a weight where necessary to avoid entanglement with wet well piping and support brackets. The location and method of attachment of the float switches, pressure transducers, and cables shall be detailed on the plans.

Mitigation of wet well odors shall be provided as recommended in the odor evaluation and as required by City or County code.

A resilient seat gate valve in an influent valve manhole shall be provided on all influent lines to the wet well, as described elsewhere in these standards.

The wet well vertical walls, and the underside of the lid and all ductile iron surfaces shall be coated, following installation and grouting of the pipe penetrations, to comply with the following:

Surface Preparation: Allow 28 days cure time for concrete, or until passing the ASTM D4263 Plastic Mat Test (may be shorter for various grout mixes). SSPC SP-13 Abrasive Blast to provide a surface profile on all concrete surfaces and SSPC SP10 Near White Blast on all metal surfaces to be coated. Surfaces shall be clean, dry and free of contaminants.

Surface Filler: Tnemec Series 218 Mortar Clad. Apply multiple coats to the concrete surfaces as needed to fill bug holes and surface voids and to provide a primed surface that is monolithic, continuous and pinhole free.

Primer: Tnemec Series 435 Perma Glaze. Apply at 20.0 to 25.0 mils dry film thickness.

Finish: Tnemec Series 435 Perma Glaze. Apply at 20.0 to 25.0 mils dry film thickness.

Application: Comply with paint manufacturer's recommendations, including recommended recoat intervals.

WET WELL MOUNTED STATION

The wet well shall be a minimum of six (6) feet in diameter. Suction piping shall be Schedule 80 PVC and shall be braced at a point above the maximum liquid elevation to prevent damage during vactor operations, while allowing the piping to be rotated to access the check valves in the wet well mounted pumping station. Suction piping attachment and bracing shall be detailed on the plans. A cast-in-place reinforced concrete slab (12' x 16' minimum) shall be provided over the wet well as a housekeeping pad and mounting surface for the factory-built pump station. Provide a 4-inch vent that is "hooked and screened."

BURIED PUMP STATION

The wet well shall be a minimum of 8 feet in diameter. The wet well shall provide for the volute of the pumps to be fully submerged at all times. The highest float switch (PUMP 2 ON/HIGH ALARM) shall be set a minimum of 6 inches below the invert of the lowest gravity sewer inlet pipe, or at an elevation as may be set by the City.

The wet well shall be of pre-cast concrete construction with flat slab cover and 30-inch aluminum access hatch cast into the cover, with the hinge positioned over the ladder so that the hatch can be used as a handhold

when entering the wet well. The flat slab concrete cover shall be provided with a 4-inch minimum vent that is "hooked and screened." A separate manhole cover shall be cast into the cover for vertical access to the wet well trough by a vactor unit.

9. CONTROLS:

FACTORY-BUILT PUMP STATION

The control panel for the package pump station shall include:

- Distribution circuit breakers for protection of branch circuits derived in the control panel.
- City Panel mounted running light for each pump
- Panel mounted overtemp light for each pump
- Panel mounted prime fail light for each pump
- Panel mounted ammeter for each pump to read percentage of full load (or amperes)
- Panel mounted running time meter for each pump (Cramer or Grasslin)
- Panel mounted HOA (Hand-Off-Auto for above grade stations) or LOR (Local-Off-Remote for buried stations) switches for each pump.
- Spare contact on HOA switches to remotely indicate when the switch is in AUTO position
- Terminals for connection of remote start contact for each pump with selector switch in AUTO position
- HOA switches to be without spring return in hand mode
- Above listed electrical components shall be Allen-Bradley, Cutler Hammer, General Electric, or Square D Company, unless otherwise noted
- Panel mounted digital level displays connected in the loop outputs for each of the two pressure transmitters
- Panel mounted pressure transmitter "active" (green) and "available" (yellow) lights, one set for each pressure transmitter
- Control relays as required for pump starting, pump protection, and alarming functions
-

GENERAL

Control and instrument system plans shall thoroughly and completely depict system design. The plans, in conjunction with the specifications, shall define the type of control system, the type of components in the system, the set points and the interface between the instrumentation and control system and the mechanical components. To accomplish this, the control and instrument plan(s) shall include, as a minimum, the following:

1. Control and instrumentation system legend and general notes
2. Control, instrumentation and distribution diagram
3. Plans showing location of all control, instrument, and distribution system equipment and components, both electrical and pneumatic
4. All equipment and installation details

The power, control and instrumentation systems shall be designed with both operational reliability and maintainability. Use standard products wherever possible.

All components within the pump station system, including both internally and face-mounted instruments and devices, shall be clearly identified with phenolic nameplates with white letters on black background.

All wiring between cabinet, equipment and components shall be marked/numbered and multiple color coded where applicable.

All conduits shall be tagged at each end.

Pumps shall normally be operated on a lead/lag basis based on wet well level as determined by duel pressure transmitters. The pressure transducer's output signal will be series loop connected with the PLC and a setpoint controller (Red Lion PAXP with 4-20 mA input and 4-relay output card) each producing a 4 to 20 mA signal proportional to the wet well level. The SCADA PLC (provided separately from the Smith and Loveless pump station control panel) shall be programmed to generate pump calls via relay contact outputs which will be connected to the pump station control panel, as well as high and low wet well level alarms, based on the average 4 to 20 mA signals generated by the pressure transducer. The PLC program shall have the capability to determine whether a specific transducers output is out of range and to ignore that output from that transmitter and to issue a transmitter failure alarm. The PLC program will generate a pressure transducer out of calibration alarm if the two signals differ be 4 or more inches

The wet well level as determined by each transducer shall also be displayed on the pump control panel door, with one display for each transducer. A three-position selector switch on the telemetry panel and connected to the SCADA PLC shall allow the operator to select the output from transmitter 1, transmitter 2, or both for use in the PLC control of the pumps. A green panel mounted "active" pilot light on the pump control panel, adjacent to each transmitter level display, and connected to an output of the PLC shall indicate when the associated output is selected for input to the PLC. A yellow panel mounted "available" pilot light on the control panel, adjacent to each transmitter level display, and connected to an output of the PLC shall indicate when the associated output is within range, as determined by the control program in the SCADA PLC.

Float controls shall also be provided to operate independently and in parallel with the PLC and backup controls and shall be known as Mode 3 control. Floats shall be connected to the pump control panel via Intrinsically Safe Relays mounted in the control panel, with each float starting a pump directly and independently of the PLC and backup controls and after the float has reset the pump will continue to run for an adjustable time via a timing relay. .

The wet well control elevations shall be indicated on the plans, i.e. for duplex station: HIGH LEVEL ALARM/LAG PUMP ON (float switch), HIGH LEVEL ALARM/LEAD PUMP ON (float switch), HIGH LEVEL ALARM (pressure trasducer), LAG PUMP ON (pressure transducer), LEAD PUMP ON (pressure transducer), LAG PUMP OFF (pressure transducer), LEAD PUMP OFF (pressure transducer), and LOW LEVEL ALARM (pressure transducer).

The intrusion/operator access limit switch shall be connected to the pump control panel and used to monitor intrusion into the control panel in conjunction with a key operated deactivation/activation switch located on the panel door and a time delay relay that delays the alarm signal for an adjustable interval on deactivation. Reactivation shall not occur until the limit switch is reset.

Buried stations shall have an HOA (Hand-Off-Auto) switch at each pump and a LOR (Local-Off-Remote) switch at the factory control panel. Above grade stations shall have only the HOA switch located at the factory control panel. Each HOA switch shall have an "AUTO" contact to signal that the pump is in "AUTO" mode. For buried station, an output of the PLC shall generate an alarm if either pump is left not in Auto when the operator has left the station. The signal shall be displayed by a local flashing beacon light on the top of the telemetry panel, with dry contacts

for SCADA system use. The beacon shall be equipped with a bypass toggle switch located in the panel interior.

The single-phase transformer for the lift station shall be as required for proper operation of the single phase side system.

The pump station electrical circuit shall be designed for generator starting and signals to the SCADA system as required.

A complete set of spare fuses shall be provided for all fused equipment.

LIST OF DRY CONTACT OUTPUTS FROM CONTROL PANEL TO SCADA SYSTEM, AND CONTROL SYSTEM RESET REQUIREMENTS

Alarm/Status Outputs	**Reset**
Pump 1 Run	N/A
Pump 2 Run	N/A
Pump 1 Pump–In–Auto	N/A
Pump 2 Pump–In–Auto	N/A
Pump 1 Fail	Auto
Pump 2 Fail	Auto
Pump 1 Prime Failure	Auto
Pump 2 Prime Failure	Auto
Intrusion Alarm	Auto
Wet Well High Level Alarm (Lead and Lag Pump Floats)	Auto
Station on Backup Control	Auto
Pumps Off (Float)	Auto
Low Voltage, Phase Loss, Phase Reversal	Auto
Control Power Failure	Auto
Smoke Detector	Auto
Station Flooding (buried station only)	Auto
Ventilation Fail (buried station only)	Auto w/ delay
Operator in Trouble	Manual

Two independent sets of contacts shall be provided for each alarm/status condition. One set will be used with the PLC and one set will be used with the annunciator or dialer. The pump fail alarm for each pump shall be activated upon check valve limit switch fail to open (timed delay at pump start).

LIST OF ANALOG OUTPUTS FROM CONTROL PANEL TO SCADA SYSTEM

Wet Well Level Transmitter 1 (analog)	
Wet Well Level Transmitter 2 (analog)	

LIST OF DISCRETE INPUTS FROM SCADA SYSTEM TO CONTROL PANEL

Call Pump No. 1	
Call Pump No.2	
Pump No.1 Overtemp	
Pump No. 2 Overtemp	
Transducer No. 1 Active	
Transducer No. 2 Active	
Transducer No. 1 Available	
Transducer No. 2 Available	

10. ELECTRICAL SERVICE & DISTRIBUTION / TELEMETRY SYSTEM & CONTROLS:

GENERAL

Codes and regulations exist at the federal, state, and local level dictating minimum acceptable requirements for electrical systems. The following standards shall be used as a basis for design and review.

- National Electric Code (NEC)
- Occupational Safety & Health Act (OSHA)
- State & Local Building Codes
- National Electrical Code (NESC)
- National Electrical Manufacturers Association (NEMA)
- Underwriters' Laboratory (UL)
- Insulated Power Conductor Engineering Association (IPCEA)
- American National Standards Institute (ANSI)
- Institute of Electrical & Electronic Engineers (IEEE)
- National Fire Protection Association (NFPA)

ELECTRICAL SERVICE & DISTRIBUTION

The local electric utility will be the primary source of electrical power. The Developer shall ascertain proper coordination between the nominal secondary delivery voltage supplied by Snohomish County P.U.D. No. 1

and the connection to the lift station equipment. The electrical service shall be 480 volt, 4-wire, 3-phase, 60 hertz, with a solid neutral terminal at the disconnect or as may otherwise be required by Snohomish County P.U.D. No. 1. This shall be confirmed with the Snohomish County P.U.D. No. 1 and confirmed by the suppliers. Underground service shall be provided unless otherwise approved by the City.

All installation shall be approved by Snohomish County P.U.D. No. 1 and shall be in conformance with the N.E.C. (current issue), U.L., O.S.H.A. and County and State electrical codes. Particular attention is directed to the fact that the State of Washington requires that electrical equipment and electrically powered equipment be listed or labeled by a testing laboratory (U/L or other Nationally Recognized Testing Laboratory) acceptable to the Washington State Department of Labor and Industries.

The City shall be furnished with a certificate of final inspection by the inspecting agency.

All wire shall be stranded copper.

All exposed conduit shall be rigid galvanized. All underground conduits shall be PVC with rigid galvanized PVC-coated elbows and rigid galvanized PVC coated transitions to exposed conduit.

All underground conduits shall be marked with polyethylene tape placed 6-inches below finished grade and directly above the conduit.

All conduits shall have a minimum of 24 inches of cover.

All conduit shall be tagged at each end.

Heating strips with thermostats shall be provided for outside electrical enclosures with temperature sensitive devices.

Service voltage shall be 277/480 volts, 3 phase, 4-wire, except as required by Snohomish P.U.D. #1. Single-phase services shall be 240/120 volt, 3 wire, if approved by the City, where 480 volt 3-phase is not available.

A service entrance shall be provided with a rack or pedestal on which shall be mounted, as a minimum, the following equipment:

1. Meter and meter can (as required by the P.U.D.)

2. Metering current transformers and enclosure (as required by the P.U.D.)

3. Main disconnect circuit breaker in a NEMA 3R, enclosure, with padlock to City standards

4. Automatic transfer switch in a NEMA 3R enclosure

5. A 480 volt distribution panelboard with circuit breakers for each pump starter, one for a 480-240/120V stepdown transformer, and (as required) for other 480 volt loads.

6. A 10 or 15 KVA single phase transformer.

7. A 24 (or more) circuit panelboard in NEMA 3R enclosure with main circuit breaker and branch circuit breakers for receptacle outlets, engine generator (battery charger, block heater, control panel and other generator heaters or equipment), hot box, site or area lighting, telemetry panel, pump control panel, other loads (as required) and three spares (1-Pole 20A).

8. A 120-volt duplex receptacle outlet in NEMA 3R enclosure with padlock to City standards.

9. Ground rod(s) and connector wire in conduit to N.E.C. standards.

10. Pump control panel in a NEMA 3R enclosure with locking 3-point latch with ethernet capable PLC, operator interface (18-bit color, touch screen, 640 x 480 resolution minimum) and SCADA modem. Also, setpoint controllers, power distribution, ethernet switch, 24 VDC power supply control relays, and terminal strips. Door mounted devices shall be mounted on an interior door. “Operator-In-Trouble” mushroom head maintained contact (detented) pushbutton on exterior bottom of panel.

11. Telephone service from serving telecom utility to telemetry panel including Line Protection Unit (LPU) or Building Entrance Protector (BEP) and Network Interface Unit (NIU).

12. Mount equipment per Standard Details

13. Provide spare conduits as determined by the City’s engineer

Provide electrical single-line diagram as part of the design showing all components and control between pedestal, lift station and generator with wire and conduit sizes.

The City shall be provided with a complete reproducible set of as-constructed plans and details showing final location of all equipment, conduit and wire.

TELEMETRY (SCADA SYSTEM) & CONTROLS

The City's telemetry system (also called SCADA system) utilizes PLCs that are from the same Manufacturer' as the WWTP's PLC and telephone modems for telemetry/SCADA functions related to the wastewater collection system. A control/telemetry panel for the SCADA system is to be included with each lift station. Developer shall pay for installation of a telephone line to the station.

For each new lift station the Developer shall provide a control/telemetry panel including a SCADA PLC, operator interface (18-bit color, touch screen, 640 x 480 resolution minimum), modem, power supply, heater, surge protection devices for power, setpoint controllers, relays, and all other auxiliary devices as required for proper operation of the system. Inputs and outputs shall be connected to a terminal strip in the control/telemetry panel.

The SCADA PLC shall be programmed to generate pump calls and well level alarms via interposing relay contact outputs to the pump station control panel, based on the average 4 to 20 mA signals generated by the pressure transmitters. The PLC program shall have the capability to determine whether a specific transmitter output is out of range and to ignore the output from that transmitter and to issue a transmitter failure alarm The PLC program will generate a pressure transducer out of calibration alarm if the two signals differ be 4 or more inches.

Typical discrete inputs to the PLC include:

From Control/Telemetry Panel

- Level Transmitter 1 Selected
- Level Transmitter 2 Selected
- Use Average Selected

From Transfer Switch

- Commercial Power Fail
- Generator Power Fail

- Connected to Commercial Power
- Connected to Generator Power
- Commercial Source Available
- Standby Source Available
- Transfer Switch Not In Auto
-
- From Generator Control Panel
- Generator Run
- Generator Fail
- Generator Low Fuel
- Generator Fuel Tank Leak
- Generator Low Battery Voltage
- Generator Not In Auto
-
- From Pump Station Control Panel
- Pump No. 1 Run
- Pump No. 2 Run
- Pump No. 1 HOA Status (Hand/Auto)
- Pump No. 2 HOA Status (Hand/Auto)
- Pump No. 1 Fail
- Pump No. 2 Fail
- Pump No. 1 Overload
- Pump No. 2 Overload
- Pump No. 1 Over Temperature (VFD only)
- Pump No. 2 Over Temperature (VFD only)
- Pump No. 1 Fault (VFD only)
- Pump No. 2 Fault (VFD only)
- Intrusion Alarm
- Wet Well High Level (lag pump float switch)
- Wet Well High Level (lead pump float switch)
- 3 Phase Voltage Fail (from control panel phase monitor)
- Control Power Fail
- Smoke
- Station Flood (Buried Station)
- Ventilation Fail (Buried Station)
- Operator in Trouble

Typical discrete outputs from the PLC include:

- Start Pump 1 (via an interposing relay driven by the PLC)
- Start Pump 2 (via an interposing relay driven by the PLC)

- Transmitter No.1 Active (via an interposing relay driven by the PLC)
- Transmitter No. 2 Active (via an interposing relay driven by the PLC)
- Transmitter No. 1 Available (via an interposing relay driven by the PLC)
- Transmitter No. 2 Available (via an interposing relay driven by the PLC)
- Transmitter 1 Fail (via an interposing relay driven by the PLC)
- Transmitter 2 Fail (via an interposing relay driven by the PLC)
- Transmitters Out Of Calibration (via an interposing relay driven by the PLC)
- High Wet Well Level Alarm (via an interposing relay driven by the PLC)
- Low Wet Well Level Alarm (via an interposing relay driven by the PLC)

Typical analog inputs to the PLC include:

- Wet Well Level Transmitter No.1
- Wet Well Level Transmitter No.2
- Pump No. 1 Amperes
- Pump No. 2 Amperes
- Pump No. 1 Speed (VFD only)
- Pump No. 2 Speed (VFD only)
- Pump No. 1 At Full Speed (SS only)
- Pump No. 2 At Full Speed (SS only)

Typical analog outputs from the PLC include:

- Pump No. 1 Speed Set Point (VFD only)
- Pump No. 2 Speed Set Point (VFD only)

Provisions shall also be made for additional I/O signals by providing 20% spare terminals within the telemetry panel.

The Developer shall be responsible for furnishing, installing, and starting up the control/telemetry panel for the new lift station. The Developer shall be responsible for the programming of the SCADA PLC at the lift station and the HMI at the City's WWTP. The Developer shall coordinate furnishing, installing and startup with the City to ensure that the station is properly configured and functions correctly in conjunction with the City's existing SCADA system.

The Developer shall coordinate with the telephone utility and the City for obtaining proper telephone service to the site the service shall be underground unless otherwise approved by the City. A line (surge) protector unit shall be provided for each telephone line. The unit shall protect against transient and electrical surges on the telephone line. Protection shall include line fuses and clamps for voltages over 25 volts. Gas tubes shall be provided as an integral part of the lightning protection unit.

All major components, including relays, terminals, and power supplies shall be identified using phenolic or vilam engraved labels.

11. AUXILIARY (STANDBY) POWER SYSTEM:

GENERAL

Standby power generation equipment shall be provided at the lift station site that will operate the lift station in the event of a commercial power outage.

It is essential that the standby system be designed with capacity and rating to carry safely the entire connected lift station load, including all pumps and ancillary loads unless otherwise approved by the City.

The standby power unit shall be complete in every respect and shall include, but not be limited to, the following:

1. Generator, control panel, main circuit breaker and load bank circuit breaker.
2. Engine, radiator and exhaust system.
3. Fuel tank.
4. Generator set enclosure, lockable, and sound attenuating.
5. Automatic transfer switch.
6. Block Heater
7. Battery and rack.
8. Battery charger (located in transfer switch).
9. Conduit, wire and piping.

The generator set shall be diesel fueled, or spark-ignited liquid propane fueled if approved by the City, 60 Hertz, 1800 RPM, 3-phase, 277/480 volt standby power.

The generator set shall include the following:

Engine

- Single phase, 1500 watt coolant heater (115 Vac)

Generator Set

- Main circuit breaker
- Load bank circuit breaker (identical to main circuit breaker)
- Weather-protective enclosure with mounted silencer (maximum noise level of 68 dBA at 23 feet)
- 5-year basic standby-power warranty

Accessories

- Batteries
- Battery Charger (located in transfer switch)
- Vibration Isolators, Pad Type

Control Panel

- Annunciator relays (12)
- Run relay package (3)
- Low coolant level shutdown
- Anti-condensation space heater, 120 Vac
- Oil temperature gauge
- Wattmeter
- Emergency stop switch

Fuel Systems

- Diesel. All fuel piping shall be black iron, except for flexible vibration isolation connections at pipe ends. Diesel tank shall be a dual-wall subbase tank with leak detection.
- Capacity for 24 hours operation plus 25%, at rated lift station capacity and full auxiliary load.

Alternator

- Anti-condensation heater, 120 Vac powered

Exhaust System

- Exhaust silencer (68 dBA at 23 feet)

Control Features

- Run-stop-remote switch
- Remote starting, 12 or 24-volt, 2 wire
- Coolant temperature gauge

- Field circuit breaker
- DC voltmeter
- Running time meter
- Lamp test switch
- Oil pressure gauge
- Fault reset switch
- Cycle cranking
- 12-light engine monitor with individual 1/2 amp relay signals and a separate status or alarm contact for each of the following conditions:
  - Run (Green Light)
  - Pre-Warning For Low Oil Pressure (Yellow Light)
  - Pre-Warning For High Coolant Temp (Yellow Light)
  - Low Oil Pressure Shutdown (Red Light)
  - High Coolant Temperature Shutdown (Red Light)
  - Overcrank Shutdown (Red Light)
  - Overspeed Shutdown (Red Light)
  - Switch Off (Flashing Red Light- Indicates Generator Set Not In Automatic Start Mode)
  - Low Coolant Temperature (Yellow Light)
  - Low Fuel (Yellow Light)
  - Fuel Leak (Red Light)
  - Two Customer Selected Faults (Red Light)

AC Meter Package

Order with NFPA 110 monitor.

- AC voltmeter (dual range)
- AC ammeter (dual range)
- Voltmeter/ammeter phase selector switch with an off position
- Dual scale frequency meter/tachometer
- AC Rheostat (panel mounted) for + 5 percent voltage adjust

The transfer switch shall include the following:

- Sized for full station and auxiliary equipment load plus 25 percent.
- Delayed transition, including dry contacts for signaling the generator to start on commercial power failure.
- Contacts for signaling commercial power fail, generator power fail, connected to utility power, and connected to generator power.

Pole Configuration

- Poles - 3 (Solid Neutral)

Frequency
- 60 Hertz

Application
- Utility to Genset

System Options
- Three phase, 4-wire

Enclosure
- Weather-protective enclosure with mounted silencer (maximum noise level of 68 dBA at 23 feet)

Listing
- Listing - UL 1008

Programmed Transition
- Programmed Transition, 1-60 sec.

Exerciser Clock
- 7-day solid-state exerciser clock, programmable as to day and time of day for generator exercising.

Applications Modules
- Monitor - Phase Sequence/Balance

Suitable guards shall be provided on all electrical parts to minimize the personal shock hazard.

Generator shall be broken-in sufficiently to permit application of full load immediately upon installation.

Generator supplier shall provide all tools for the generator set as recommended and required by the manufacturer.

Generator installation shall be checked by the supplier after installation to determine that the installation is correct. Written confirmation shall be provided to the City. Generator supplier shall perform a full load test for 2 hours after installation is complete. Provide resistive load bank for this test.

Generator supplier shall provide training for City personnel at the station site, as described elsewhere in this section.

Generator manufacturer shall provide four (4) copies of the maintenance and operation manual. These manuals shall be complete and shall include all information necessary to allow City's personnel to operate and maintain the generator.

Generator mounting pad shall be reinforced concrete to carry the weight of the unit and shall extend a minimum of 3 inches beyond generator housing and 4 inches above the surrounding finish grade. Chamfer all edges 3/4 inch.

The generator shall be provided with a 2-year service agreement and set of manufacturer's recommended spare parts, including filters, belts, hoses, and similar items.

12. FORCE MAIN:

The force main shall be installed and tested in accordance with the Sanitary Sewer System – General Standards, and as further described herein.

The force main shall be a minimum 6-inch diameter ductile iron Class 52 with a minimum cover of 4'-0". Where feasible, there shall be no intermediate high point between the pump station and the force main discharge point, unless properly protected with sewage air and vacuum release assembly. Where approved by the City, butt-fused HDPE pipe may be substituted for ductile iron pipe.

Where feasible, the force main shall discharge to a new manhole prior to entering the existing system. The force main shall enter the discharge manhole at the same crown elevation as the outlet gravity pipe and shall be channeled accordingly. Walls, cone and neck of the discharge manhole shall be coated in accordance with the specification for wet well coating. Where the use of a new discharge manhole is not feasible, a drop connection to an existing manhole may be used, with City approval, and the existing manhole rechanneled and coated accordingly.

A minimum of one emergency bypass pump connection equipped with a female cam lock fitting and plug shall be located near the wet well, in a location specified by the City, with drain back to the wet well. Additional connections may be required for high capacity lift stations, as determined by the City's Engineer. Valves shall be located within a valve vault per the standard detail.

13. LIFT STATION TEST PROGRAM:

The Developer shall perform, as a minimum, the following tests and provide the City written documentation of the date performed and results obtained. Pump tests shall meet or exceed specified capacity. The City shall be informed of the testing schedule 72 hours prior to the test and shall be present during testing. All tests shall be supervised by the manufacturer's representative for the applicable equipment, and documentation shall be provided of satisfactory installation of the factory-built pump station and associated control systems, the generator and transfer switch, and the electrical system, at the conclusion of the testing.

1. Demonstrate proper station operation under normal operating and individual alarm conditions.
2. Pump capacity by drawdown test, for each pump operating alone and each combination of multiple pump operation. Record amperes and furnish pressure gauge to record static head and total dynamic head for each condition at one specific wet well level.
3. Control/telemetry panel operation. Float switch operation.
4. Generator load test
5. Automatic transfer to and from auxiliary power
6. Control and telemetry to terminal strip
7. Sewage pump vibration test

Fill water for testing shall be obtained in accordance with the cross-connection policies of the local water purveyor.

Documentation of satisfactory installation shall be provided for the pump station and the auxiliary generator. Documentation of satisfactory installation shall be in the form of a notarized manufacturer's affidavit submitted by the manufacturer or an authorized representative, certifying that:

1. the equipment has been properly installed and lubricated,
2. the equipment is in accurate alignment,
3. the manufacturer was present when the equipment was placed into operation,
4. the manufacturer has checked, inspected, and adjusted the equipment as necessary,
5. the equipment is free from any undue stress imposed by connecting piping or anchor bolts,
6. the equipment is not imposing any undue stress on any connecting members,

7. the equipment has been operated satisfactorily under full load conditions,
8. the manufacturer has inspected his equipment during the operational demonstrations and system validation tests to the extent specified, and the equipment is fully covered under the terms of the guarantee.

14. TRAINING AND FOLLOW UP INSPECTION:

The following training and follow-up service shall be provided at the Developer's expense, by the manufacturer's representative, and shall be in addition to any testing and inspection services required for installation and start up. Start up and training shall not occur until approved O&M materials have been provided to the City. Training shall occur after the onsite testing and startup for the entire lift station facility is complete. Training shall be coordinated with training for the other lift station components. Training shall not occur on the same day as site testing and/or startup for any of the lift station components. Training and follow-up inspections shall be scheduled in advance with the City.

Pump Station:

- 1/2 day training at start up
- 1/2 day training at 6 months, to include general warranty inspection plus tightening and sealing of suction piping for the wet well mounted station

Generator:

- 1/2 day training at start up
- 1/2 day training at first warranty inspection

Electrical/Controls:

- 1/2 day training at start up, except that VFDs (if supplied) shall have an additional 1/2 day training specific to the VFDs)

15. OPERATIONS AND MAINTENANCE INFORMATION:

Record (as-constructed) information for the lift station shall be incorporated into the record drawings for the developer extension. In addition, the Developer shall submit operations and maintenance information for the lift station equipment.

The following information shall be furnished for all items of equipment installed on the project requiring operational and/or maintenance procedures, and for any additional items indicated by the Engineer.

1. Lubrication Information: This shall consist of the manufacturer's recommendations regarding the lubricants to be used and the lubrication schedule to be followed.

2. Drawings and Diagrams: Drawings shall include record (as-constructed) version of dimensional outline drawings in either full-size (22" x 34") or half-size (11" x 17") format. Diagrams shall record (as-constructed) version of schematic electrical and connection diagrams, showing points of connection, numbers of circuits, size and number of conduits and conductors.

3. Start-Up Procedures: These instructions shall consist of equipment manufacturer's recommendations for installation, adjustment, calibration, and troubleshooting.

4. Operating Procedures: These instructions shall consist of the equipment manufacturer's recommended step-by-step procedures for starting, operating, and stopping the equipment under specified modes of operation.

5. Preventive Maintenance Procedures: These instructions shall consist of the equipment manufacturer's recommended steps and schedules for maintaining the equipment.

6. Overhaul Instructions: These instructions shall consist of the manufacturer's directions for the disassembly, repair and reassembly of the equipment and any safety precautions that must be observed while performing the work.

7. Parts List: This list shall consist of the generic title and identification number of each component part of the equipment. Component equipment items provided by other manufacturers shall be identified with the manufacturer's name, part description, and part number.

8. Spare Parts List: This list shall consist of the manufacturer's recommendations of number of parts and quantities that should be stored by the Owner and any special storage precautions that may be required. Note spares provided.

9. Exploded View: Exploded or cut views of equipment shall be provided if available as a standard item of the manufacturer's

information. When exploded or cut views are not available, plan and section views shall be provided with detailed callouts.

10. Copies of factory test results, startup check lists, manufacturer's affidavits of proper installation, initial equipment set points and related documentation

11. Maintenance Information Summaries as specified herein.

Four preliminary review copies of the manufacturer's equipment O&M manuals shall be submitted to the Engineer for review at the time of equipment delivery and not later than 7 days prior to product training. All manuals except one return copy with comments will be retained by the Engineer. Allow 14 days for Engineer's review.

Four copies of the final acceptable operational and maintenance materials shall be submitted to the Engineer prior to project acceptance.

Maintenance Information Summaries (MIS) shall be provided for the following component equipment items, within the appropriate section of the equipment manuals, prepared according to the format specified herein:

- non-clog pumps
- sump pumps
- heating and ventilation equipment
- standby generator
- valves (larger than 1" in size)

Maintenance information summaries shall be furnished on 8-1/2" x 11" paper and on diskette in a City-approved format. The Engineer shall provide a Microsoft Excel template file on diskette. The MIS shall contain the following information compiled from manufacturer's recommendations in the order shown.

1. Description or name of item of equipment.
2. Manufacturer.
3. Name, address, and telephone number of local manufacturer's representative.
4. Serial number (where applicable).
5. Equipment nameplate data including model number.
6. Recommended maintenance procedures:
    - Description of procedures.
    - Maintenance frequency required.

- Lubricant(s) or other materials required (where applicable), including type of lubricant, lubricant manufacturer, and specific compound.
- Additional information as required for proper maintenance.

7. Spare parts provided (where applicable).

All operation and maintenance information shall be comprehensive and detailed, and shall contain information adequately covering all normal operation and maintenance procedures. The information shall be organized in high quality D-style 3-ring binders. The binders shall be provided with spine labels, cover inserts, a table of contents and tab sheets to permit easy location of desired information. Each volume shall contain an index for the entire set. Sheets shall be 3-hole punched, and not otherwise punched for comb binding or spiral binding.

All information shall be specifically for items of equipment installed in the Project. Material not directly applicable shall be removed, neatly lined out, or omitted from catalogs or other printed information.

Lubricants shall be described in detail, including type, recommended manufacturer, and manufacturer's specific compound to be used.

If manufacturer's standard brochures and manuals are used to describe operating and maintenance procedures, such brochures and manuals shall be modified to reflect only the model or series of equipment used on this project. Extraneous material shall be crossed out neatly or otherwise annotated or eliminated.

CHAPTER 8

WATER SYSTEM STANDARDS

8.1 GENERAL

The standards established by this chapter are intended to represent the minimum standards for the design and construction of water system facilities. Greater or lesser requirements may be mandated by the City due to localized conditions. Extensions, connections or modifications to the existing system shall be in compliance with the State Department of Health.

Off-site improvements to the existing system may be warranted based on (1) the condition and capacity of the existing water system and (2) impacts caused by the proposed development. These off-site improvements (in addition to "on-site improvements) shall be completed as determined by the City Engineer to mitigate impacts caused by the development.

The following minimum design and construction considerations shall apply:

8.2 DESIGN STANDARDS

The design of water system improvements shall depend on their type and local site conditions. The design elements of water system improvements shall conform to City Standards as set forth herein.

A. Detailed plans shall be submitted for the City's review which provide the locations, size, and type of the proposed water system and points of connection. These Plans shall be separate from Sewer Plans.

B. Project plans shall have a horizontal scale of not more than 50 feet to the inch. Plans shall show:

1. Locations of streets, right-of-ways, existing utilities and water system facilities.

2. Ground surface, pipe type and size, and water valves and hydrants stationing.

3. All known existing structures, both above and below ground, which might interfere with the proposed construction, particularly sewer lines, gas mains, storm drains, overhead and underground power lines, and telephone lines and television cables.

4. All utility easements, and applicable County recording number(s).

C. Computations and other data used for design of the water system shall be submitted to the City for approval.

D. The water system facilities shall be constructed in conformance with the Current version of the Standard Specifications for Road, Bridge, & Municipal Construction and current amendments thereto, State of Washington, revised as to form to make reference to Local Governments and as modified by the City's requirements and standards.

E. Material and installation specifications shall contain appropriate requirements that have been established by the industry in its technical publications, such as ASTM, AWWA, WPCF, and APWA standards. Requirements shall be set forth in the specifications for the pipe and methods of bedding and backfilling so as not to damage the pipe or its joints.

F. Except as otherwise noted herein, all work shall be accomplished as recommended in applicable American Water Works Association (AWWA) Standards, and according to the recommendations of the manufacturer of the material or equipment concerned.

G. The location of the water mains, valves, hydrants, and principal fittings including modifications shall be staked by the Developer. No deviation shall be made from the required line or grade. The Contractor shall verify and protect all underground and surface utilities encountered during the progress of this work.

H. Prior to final inspection, all pipelines shall be tested and disinfected.

I. Before acceptance of the water system by the City, all pipes, assemblies, and other appurtenances shall be cleaned of all debris and foreign material. After all other work is completed and before final acceptance, the entire roadway, including the roadbed, planting, sidewalk areas, shoulders, driveways, alley and side street approaches, slopes, ditches, utility trenches, and construction areas shall be neatly finished to the lines, grades and cross sections for a new roadway consistent with the original section.

J. The Developer shall be required, upon completion of the work and prior to acceptance by the City, to furnish the City with a written guarantee covering all material and workmanship for a period of two years after the date of final acceptance and he shall make all necessary repairs during that period at his own expense, if such repairs are necessitated as the result of

furnishing poor materials and/or workmanship. The Developer shall obtain warranties from the contractors, subcontractors and suppliers of material or equipment where such warranties are required and shall deliver copies to the City upon completion of the work.

8.3 GENERAL REQUIREMENTS

A. Prior to construction, the Contractor shall notify the City for a preconstruction meeting.

B. Work shall be performed only by contractors experienced in laying public water mains.

C. Prior to any work being performed, the Contractor shall contact the City's Utilities Superintendent or City Engineer to set forth his proposed work schedule.

D. Contractor shall obtain approval of materials to be used from City's Public Works Superintendent and/or City Engineer prior to ordering of materials.

E. Water mains shall be laid only in dedicated street, rights-of-ways or easements shown on preliminary plats or which have been granted to the City. A street is normally not considered dedicated until the plat which created it has been officially filed with the County Auditor.

F. All water main distribution pipeline construction shall have a minimum 36" cover from finished grade and 42-inch cover over transmission mains. Mains shall generally be located parallel to and ten feet northerly or easterly of street centerline. Water mains shall be extended to the far property line(s) of the property being served. Off-site extensions may be required to hydraulically loop existing and new systems. Oversizing of water mains may be required to be installed per City's current Water Comprehensive Plan.

G. Fire hydrants are generally required approximately every 600 feet in residential areas, and every 300 feet in commercial areas. However, fire hydrants shall be furnished and installed at all locations as specifically mandated by the local fire marshal and/or per City Building Code.

H. Fire hydrants on dead end streets and roads shall be located within approximately 300 feet from the frontage center of the farthest lot. Distances required herein shall be measured linearly along street or road.

I. Valves shall be installed at not more than 1,000-foot spacing. Valves shall be installed on all legs of all tees and crossed except fire hydrant tees.

J. Pipes connecting hydrants to mains shall be at least 6 inch in diameter and be less than 50 feet in length.

K. Dead end lines are not permitted except where the Developer can demonstrate to the City's satisfaction that it would be impractical to extend the line at a future date. Water mains on platted cul-de-sacs shall extend to the plat line beyond the cul-de-sac to neighboring property for a convenient future connection, and extended off-site to create a hydraulic loop, or, as minimum, have a 4-inch blow off assembly installed at the termination point.

L. All materials shall be new and undamaged.

M. Unless otherwise approved or required by the City Engineer, the water main shall be ductile iron pipe class as shown below. The minimum nominal size for water mains shall be 8 inches, unless otherwise approved/required by City Engineer.

Class	Pipe Diameter
Class 52	4" through 14"
16" and larger	Class 50

EXCEPTION: 6-inch hydrant spools and pipelines located beneath rock or retaining walls shall be Class 53.

N. All fittings shall be cement-lined ductile iron.

O. Provide bends in field to suit construction and in accordance with pipe manufacturer's recommendations so as not to exceed allowable deflection at pipe joints.

P. Provide thrust blocking and/or restrained joints at all fittings and bends in accordance with the City standards and conditions. Blocking to be designed by Developer's Engineer.

Q. Provide anchor blocking at all up-thrust vertical bends in accordance with City standards. Blocking to be designed by Developer's Engineer.

R. All valve marker posts shall be painted yellow and marked with the distance to valve being referenced.

S. Residential water service pipe shall be one-inch high density polyethylene "Poly" pipe (no joints beneath pavement areas), meeting or exceed ASTM D2239, SDR-7 as manufactured by Driscopipe (CL 200), or City approved equal.

T. Minimum size service lines between the water main and the water meter shall be 3/4 inch unless otherwise specified. All service lines shall be the minimum size otherwise specified by the County Plumbing Code in accordance with fixture units, unless otherwise specified.

U. Meter services and meter boxes shall be set to final grade and all adjustments shall be made prior to final pressure testing of the system, centerline of service inlets shall be located to match bottom elevation of meter box in such a manner that meter inlet and outlet will be the same elevation as bottom of meter box. Contractor shall furnish angle dual check valve with neoprene gaskets for outlet connections to meter at City Utilities Department Public Works Yard for each service installed. Service inlet shall be centered at inlet end of box and faced toward outlet end of box parallel with long sides.

V. All water services shall end within road right-of-way or easements.

W. All meters shall be installed by the City, and the Developer shall pay the current meter installation charge.

X. Contractor shall furnish water sample stations to City Utilities Department Public Works Yard. One station is required for development in size of 1 to 10 lots. One additional station is required for each additional 50 lots or portions thereof.

Y. All new buildings and residences shall include in their water service a suitable pressure reducing valve to protect the plumbing from excessive pressures, unless waived on the application form of the City.

Z. All new construction shall comply with the current Cross-Connection Control requirements.

AA. Cut in connections shall <u>not</u> be made on Fridays, holidays or weekends. All tapping sleeves and tapping valves shall be pressure tested prior to making connection to existing mains.

BB. Contractor shall notify City's Water Superintendent and obtain approval from him prior to any water shut-off or turn-on, affecting the water system, a minimum of 48 hours in advance.

CC. Road restoration shall be per City, County or State design and construction standards, as may be applicable. Developer and Contractor shall become familiar with all State, County and City conditions of required permits, and shall adhere to all conditions and requirements.

8.4 MATERIALS

A. Water Mains & Fittings:

1. Water mains to be installed unless otherwise approved (or required) in writing by the City Engineer shall be ductile iron pipe for all sizes.

2. The ductile iron pipe shall conform to ANSI/AWWA C151/A21.51-91 Standards, and current amendments thereto, except the ductile iron pipe shall be thickness Class 52 for 4-inch through 14-inch-diameter pipe (except for 6-inch hydrant spools which shall be Cl. 53) and Class 50 for 16" and larger. Grade of iron shall be a minimum of 60-42-10. The pipe shall be cement lined to a minimum thickness of 1/16", and the exterior shall be coated with an asphaltic coating. Each length shall be plainly marked with the manufacturer's identification, year case, thickness, class of pipe and weight.

3. Type of joint shall be mechanical joint or push-on type, employing a single gasket, such as "Tyton," except where otherwise calling for flanged ends. Bolts furnished for mechanical joint pipe and fittings shall be high strength ductile iron, with a minimum tensile strength of 50,000 psi.

4. Restrained joint pipe, where shown on the Plans shall be push-on joint pipe with "Fast Tight" gaskets as furnished by U.S. Pipe or equal for 12-inch diameter and smaller pipe and "TR FLEX" as furnished by U.S. Pipe or equal for 16-inch and 24-inch-diameter pipes. The restrained joint pipe shall meet all other requirements of the non-restrained pipe.

5. All pipe shall be jointed by the manufacturer's standard coupling, be all of one manufacturer, be carefully installed in complete compliance with the manufacturer's recommendations.

6. Joints shall be "made up" in accordance with the manufacturer's recommendations. Standard joint materials, including rubber ring

gaskets, shall be furnished with the pipe. Material shall be suitable for the specified pipe size and pressures.

7. All fittings shall be short-bodied, ductile iron complying with applicable ANSI/AWWA C110 or C153 Standards for 350 psi pressure rating for mechanical joint fittings and 250 psi pressure rating for flanged fittings. All fittings shall be cement lined and either mechanical joint or flanged, as indicated on the Plans.

8. Fittings in areas shown on the Plans for restrained joints shall be mechanical joint fittings with a mechanical joint restraint device. The mechanical joint restraint device shall have a working pressure of at least 250 psi with a minimum safety factor of 2:1 and shall be EBAA Iron, Inc., MEGALUG, Star Pipe Products, or approved equal.

9. All couplings shall be ductile iron mechanical joint sleeves.

10. The pipe and fittings shall be inspected for defects before installation. All lumps, blisters and excess coal tar coating shall be removed from the bell and spigot end of each pipe, and the outside of the spigot and the inside of the bell shall be wire-brushed and wiped clean and dry, and free from oil and grease before the pipe is laid.

11. Every precaution shall be taken to prevent foreign material from entering the pipe while it is being placed in the line. After placing a length of pipe in the trench, the spigot end shall be centered in the bell and pipe forced home and brought to correct line and grade. The pipe shall be secured in place with select backfill tamped under it. Precaution shall be taken to prevent dirt from entering the joint space. At times when pipe laying is not in progress, the open ends of pipe shall be closed by a water-tight plug. If water is in the trench when work resumes, the seal shall remain in place until the trench is pumped completely dry. No pipe shall be laid in water or when trench conditions are unsuitable.

12. The cutting of pipe for inserting fittings or closure pieces shall be done in a neat and workmanlike manner, without damage to the pipe or cement lining, and so as to leave a smooth end at right angles to the axis of the pipe. When pipe lengths are cut, the outer edge shall be beveled to prevent damage to the gasket during jointing of pipes.

13. Pipe shall be laid with bell ends facing in the direction of the laying, unless directed otherwise by the City. Wherever it is necessary to deflect pipe from a straight line, the amount of deflection allowed shall not exceed pipe manufacturer's recommendations.

14. For connection of mechanical joints, the socket, plain end of each pipe and gasket shall be cleaned of dirt before jointing, and shall be jointed according to manufacturer's directions. Bolts shall be tightened alternately at top, bottom and sides, so pressure on gasket is even.

15. For connection of push-on joints, the jointing shall be done according to manufacturer's recommendations, with special care used in cleaning gasket seat to prevent any dirt or sand from getting between the gasket and pipe. Lubricant to be used on the gasket shall be non-toxic and free from contamination. When a pipe length is cut, the outer edge of the cut shall be beveled with a file to prevent injury to the gasket during jointing.

16. Valves, fittings, plugs and caps shall be set and jointed to pipe in the manner as required. All dead ends on new mains shall be closed with dead end M.J. caps.

17. Fittings shall be "blocked" with poured-in-place concrete, with a firm minimum bearing against an undisturbed earth wall. Timber blocking will not be permitted. Thrust blocks shall be poured as soon as possible after setting the fittings in place to allow the concrete to "set" before applying the pressure test. The concrete thrust blocks shall be in place before beginning the pressure test. Anchor blocks shall be allowed to set sufficiently to develop the necessary bond strength between the reinforcing rods and the concrete anchor before beginning the pressure test.

18. All of the new piping, valves and blocking shall have been installed, disinfected and tested up to the point of cutting into existing lines before the crossover is made. The crossover to the existing system shall be in full readiness, including the cut and sized specials. Forty-eight-hour notice shall be given the City in advance of the planned "cut-ins." All sleeves shall be ductile iron.

B. Valves:

All valves 14 inch and larger shall generally be furnished and installed as butterfly valves. All valves 12 inch and smaller shall generally be furnished and installed as resilient seat gate valves.

1. Resilient-Seated Gate Valves

The gate valves shall be ductile iron body valves, iron disk completely encapsulated with polyurethane rubber and bronze, non-rising stem with "O" ring seals conforming to AWWA C509 or C515. The valves shall open counter-clockwise and be furnished with 2-inch square operating nuts except valves in vaults shall be furnished with handwheels. All surfaces, interior and exterior shall be fusion bonded epoxy coated, acceptable for potable water.

For applications with working pressure above 175 psi, a valve rated as 250 psi or higher shall be used.

Valves shall be Mueller A-2360 Series, M&H 515 Series, or approved equal.

2. Butterfly Valves

Butterfly valves shall be ductile iron body of the tight closing rubber seat type with rubber seat either bonded to the body or mechanically retained in the body with no fasteners or retaining hardware in the flowstream. The valves shall meet the full requirements of AWWA C504, Class 150B except the valves shall be able to withstand 200 psi differential pressure without leakage. The valves may have rubber seats mechanically affixed to the valve vane. Where threaded fasteners are used, the fasteners shall be retained with a locking wire or equivalent provision to prevent loosening. Rubber seats attached to the valve vane shall be equipped with stainless steel seat ring integral with the body, and the body internal surfaces shall be epoxy coated to prevent tuberculations buildup, which might damage the disc-mounted rubber seat.

No metal-to-metal sealing surfaces shall be permitted. The valves shall be bubble-tight at rated pressures with flow in either direction, and shall be satisfactory for applications involving valve

operations after long periods of inactivity. Valve discs shall rotate 90 degrees from the full open position to the tight shut position.

Valves shall be Henry Pratt Company "*Groundhog,"* M&H, or Mueller "*Lineseal III."*

3. Tapping Sleeves & Tapping Valves

The tapping sleeves shall be rated for a working pressure of 250 psi minimum and furnished complete with joint accessories. Tapping sleeves shall be constructed in two sections for ease of installation and shall be assembled around the main without interrupting service.

Mechanical joint style sleeves shall be ductile iron or fabricated steel style sleeves. Ductile iron mechanical joint style sleeves are required for all size-on-size connections. Mechanical joint sleeves shall be cast by Clow, Dresser, Mueller, Tyler, U.S. Pipe or approved equal.

Fabricated steel style sleeves shall be fusion bonded epoxy-coated, acceptable for potable water. Fabricated steel style sleeves will not be allowed for size-on-size connections.

Tapping valves shall be provided with a standard mechanical joint outlet for use with ductile iron pipe and shall have oversized seat rings to permit entry of the tapping machine cutters. In all other respects, the tapping valves shall conform to the resilient seat gate valves herein specified with regards to operation and materials.

The tapping sleeve and valve shall be tested to 100 psi (air) prior to tapping the main.

The installation contractor for the tapping sleeves and valves shall be approved by the City.

The valves shall be set with stems vertical. The axis of the valve box shall be common with the axis projected off the valve stem. The tops of the adjustable valve boxes shall be set to the existing or established grade, whichever is applicable.

All valves with operating nuts located more than 4'-0" below finished grade shall be equipped with extension stems to bring the operating nut to within 18 inches of the finished grade.

At the top of the extension stem, there shall be a 2-inch standard operating nut, complete with a centering flange that closely fits the 5-inch pipe encasement of the extension stem. The valve box shall be set in a telescoping fashion around the 5-inch pipe cut to the correct length to allow future adjustment up or down.

Each valve shall be provided with an adjustable two-piece cast iron valve box of 5-inches minimum inside diameter. Valve boxes shall have a top section with an 18-inch minimum length. The valve boxes and covers shall be Olympic Foundry No. 940 or equal.

Valves located in easements or outside of paved areas shall have concrete collars with a minimum size of 2'-0" diameter by 4-inches thick.

4. Valve Markers

Provide a blue Carsonite valve marker post for each valve outside of asphalt.

Markers shall be placed at the edge of the right-of-way opposite the valve and set so as to leave 2'-0" of the post exposed above grade. The distance in feet and inches to the valve shall be clearly stenciled on the side facing the valve in black numerals 2-inches in height.

5. Pressure Reducing and Relief Valves

There are two uniform plumbing codes: one is prepared by the International Association of Plumbing and Mechanical Officials, another is prepared by the International Conference of Building Officials. Both codes require installation of pressure reducing valves in the water service pipe when street main pressure exceed 80 psi, as follows:

> When street main pressure exceeds 80 psi, an approved pressure reducing valve with an approved pressure relief device shall be installed in the water service pipe near its entrance to the building to reduce the pressure to 80 psi or lower, except where the water service pipe supplies water directly to a water-pressure boost system, an elevated water

gravity tank, or to pumps provided in connection with a hydropneumatic or elevated gravity water-supply tank system. Pressure at any fixture shall be limited to no more than 80 psi under no-flow conditions.

Where local water pressure is in excess of 80 pounds per square inch (551 kPa), an approved type pressure regulator preceded by an adequate strainer shall be installed and the pressure reduced to 80 pounds per square inch (551 kPa) or less. For potable water services up to and including 1-1/2-inch (38.1 mm) regulators, provision shall be made to prevent pressure on the building side from exceeding main supply pressure. Approved regulators with integral bypasses are acceptable. Each such regulator and strainer shall be accessibly located and shall have the strainer accessible for cleaning without removing the regulatory or stainer body or disconnecting the supply piping. All pipe size determinations shall be based on 80 percent of the reduced pressure.

C. Fire Hydrants:

All fire hydrants shall be approved by the National Board of Fire Underwriters and conform to AWWA Specification C502, break-away type, in which the valve will remain closed if the barrel is broken. The hydrant barrel shall have a diameter of not less than 8-1/2 inches, and the valve diameter shall be not less than 5-1/4 inches. Each hydrant shall be equipped with two 2-1/2-inch hose ports (National Standard Thread), and one 4-1/2-inch pumper connection (National Standard Thread), with permanent Storz hydrant adaptor and Storz blind cap. Each hydrant shall be equipped with a suitable positive acting drain valve and 1-1/4-inch pentagonal operating nut (counter-clockwise opening). The fire hydrants shall be Mueller Super Centurion, M&H 929, or City approved equal. A blue pavement marker shall be furnished and installed in the pavement in front of each hydrant.

The holding spools between the gate valve and fire hydrant shall be made from 6-inch Class 53 ductile iron pipe, 0.34-inch wall thickness. The hydrant and gate valve shall be anchored in place using holding spools and mechanical joint restraint device. Holding spools with length in excess of 17 feet shall be supplied with an M. J. sleeve and mechanical joint restraint device.

The fire hydrants shall be painted per local fire marshal requirements with two coats of Preservative Brand caterpillar or international yellow paint.

After installation, they shall be wire brushed and field painted with two additional coats of similar yellow enamel paint. Distance to the hydrant valve shall be clearly stenciled in black numerals 2 inches in height on the fire hydrant below the pumper port.

Between the time that the fire hydrant is installed and the completed facility is placed in operation, the fire hydrant shall at all times be wrapped in burlap, or covered in some other suitable manner to clearly indicate that the fire hydrant is not in service.

D. Blow-offs & Air Relief Assemblies:

Two-inch or 4-inch blowoff assemblies shall be installed at the terminus of all dead end water mains. Blowoffs utilized by the Contractor for flushing the water main shall be sufficient size to obtain 2.5 feet per second velocity in the main. Temporary blow-offs shall be removed and replaced with a suitably sized watertight brass plug.

Two-inch air and vacuum release valves shall be installed at principal high points in the system. See detail.

The installation of these items shall include connection piping, gate valve, valve box, and all accessories. Valve markers shall be optional with City.

8.5 WATER PIPE TESTING & DISINFECTING

All pipelines shall be tested and disinfected prior to acceptance of work. A water hydrant meter shall be required and procured from the City for all water utilized for flushing pipelines. All pumps, gauges, plugs, saddles, corporation stops, miscellaneous hose and piping, and measuring equipment necessary for performing the test shall be furnished, installed and operated by the Contractor. Feed for the pump shall be from a barrel or other container within the actual amount of "makeup" water, so that it can be measured periodically during the test period.

The pipeline shall be backfilled sufficiently to prevent movement of the pipe under pressure. All thrust blocks shall be in place and time allowed for the concrete to cure before testing. Where permanent blocking is not required, the Contractor shall furnish and install temporary blocking.

As soon as pipe is secured against movement under pressure, it may be filled with water. Satisfactory performance of all valves shall be checked while the line is filling.

Contractor shall preflush all water mains after water has remained in the main for 24 hours and before pressure testing the main.

After the pipe is filled and all air expelled, it shall be pumped to a test pressure of 250 psi, and this pressure shall be maintained for a period of not less than 30 minutes to insure the integrity of the thrust and anchor blocks. **The contractor/developer is cautioned regarding pressure limitations on butterfly valves.** All tests shall be made with the hydrant auxiliary gate valves open and pressure against the hydrant valve. Hydrostatic tests shall be performed on every complete section of water main between two valves, and each valve shall withstand the same test pressure as the pipe with no pressure active in the section of pipe beyond the closed valve.

In addition to the hydrostatic pressure test, a leakage test shall be conducted on the pipeline. The leakage test shall be conducted at 150 psi for a period of not less than 1 hour. The quantity of water lost from the main shall not exceed the number of gallons per hour determined by the formula:

$$L = \frac{ND(P)^{0.5}}{7{,}400}$$

in which

L = Allowable leakage, gallons/hour
N = Number of joints in the length of pipeline tested
D = Nominal diameter of the pipe in inches
P = Average test pressure during the leakage test, psi

Defective materials or workmanship, discovered as a result of the tests, shall be replaced by the Contractor at the Contractor's expense. Whenever it is necessary to replace defective material or correct the workmanship, the tests shall be rerun at the Contractor's expense until a satisfactory test is obtained.

As sections of pipe are constructed and before pipelines are placed in service, they shall be sterilized in conformance with the requirements of the State of Washington Department of Health Services.

The Contractor shall be responsible for flushing all water mains prior to water samples being acquired. The water mains shall be flushed at a rate to provide a minimum 2.5 feet per second velocity in the main.

In all disinfection processes, the Contractor shall take particular care in flushing and wasting the chlorinated water from the mains to assure that the flushed and chlorinated water does no physical or environmental damage to property, streams, storm sewers or any waterways. The Contractor shall chemically or otherwise

treat the chlorinated water to prevent damage to the affected environment, particularly aquatic and fish life of receiving streams.

Chlorine shall be applied in one of the following manners, listed in order of preference, to secure a concentration in the pipe of at least 50 ppm.

1. Injection of chlorine-water mixture from chlorinating apparatus through corporation cock at beginning of section after pipe has been filled, and with water exhausting at end of section at a rate controlled to produce the desired chlorine concentration;

2. Injection similarly of a hypochlorite solution;

3. other City preapproved method(s) selected by Developer/Contractor.

After the desired chlorine concentration has been obtained throughout the section of line, the water in the line shall be left standing for a period of 24 hours. Following this, the line shall be thoroughly flushed and a water sample collected. The line shall not be placed in service until a satisfactory bacteriological report has been received.

City forces only will be allowed to operate existing and new tie-in valves. The Contractor's forces are expressly forbidden to operate any valve on any section of line, which has been accepted by the City.

8.6 BACKFLOW PREVENTION AND SPRINKLER SYSTEMS

1. All water systems connected to the public water system shall have backflow prevention as required by WAC 248-54-285.

2. All fire sprinkler systems as mandated/proposed/or required by the local fire marshal and/or City Ordinance that have a fire department connection shall have backflow prevention as required by WAC 248-54-285.

3. Building sprinkler systems may be required based on Building Codes/Fire Marshall requirements.

8.7 SERVICE CONNECTIONS

Individual services to each property shall be installed and connected to the new water mains. New services from existing mains will be installed by the City. The Developer shall be responsible for permitting, traffic control, excavation to expose main, shoring to protect City employees, backfilling trench, and completion of all restoration.

Upon completion of the installation of the water main (before testing and disinfection) services shall be installed by connecting to the water main and extending the service line to the property line as shown on the Standard Details or approved equal. Larger service lines shall be of the type and style as designated in the Standard Details and shown on the Plans.

All services other than single family residential shall be provided with Washington State-approved backflow prevention located immediately behind and on the property side of the water service box. Irrigation, residential single-family fire meters, duplex, and multi-family residential connections shall require double check valve assemblies (DCVA). All other connections shall require reduced pressure backflow assemblies (RPBA). Commercial fire sprinkler system, if unmetered shall require reduced pressure detector assemblies (RPDA).

All irrigation using chemical feed, or water features, including decorative ponds, pools and fountains requiring make-up water shall be protected from backflow into the public water supply by a **minimum** of an approved air-gap to be located at the fill point of the pond or water feature. This "air-gap" shall be inspected by the City prior to filling. In all instances, the water supply used for filling purposes shall be protected by a double check valve assembly (DCVA) installed behind the meter for new construction or retrofitted as close as practical on modified systems.

Corporation stops and the single meter shut-off valves shall be Mueller, Ford, or A.Y. McDonald with the type and style noted on the Standard Details or approved equal. Included as a part of the service connection shall be the furnishing and installation of the meter box complete with lid, set flush with the proposed finished grade of the lot in the designated location near the property line, all as shown on the Standard Details. The angle type of shut-off valve and angle type dual check valve shall be set inside the meter box in a proper position for installation of a future meter by the City.

Service lines between the main and the property line shall be placed at a trench depth sufficient to maintain a 3'-0" cover over the top of the service line for its full length, taking into consideration the final finished grade of the proposed street and the final finished grade of any storm ditches.

Upon completion of each service line as indicated herein, the Developer shall flush the service line to remove the debris that may interfere with the future meter installation, and further verify that the service line has full pressure and flow to the meter box.

8.8 1-1/2-INCH AND LARGER METERS

If extensions require water meters 1-1/2 inches or larger, then such entire meter installation, including valves, piping, vaults or meter boxes, drain lines and meters shall be furnished and installed by the Developer conforming to City standards. Activation of meter is subject to conformance with City requirements and payment of connection fees.

CHAPTER 9

MISCELLANEOUS UTILITY SERVICES AND ADDITIONAL DEVELOPMENT REQUIREMENTS

9.1 GENERAL

The standards established by this chapter are intended to represent the **minimum** standards for the design and construction of additional facilities. Greater or lesser requirements may be mandated by the City due to localized conditions. The following design and construction considerations shall apply.

9.2 UTILITY SERVICES

All utility lines, including electric, telephone, fire alarm and television cables shall be placed underground prior to paving. Easement for maintenance of all utilities, both on and off-site, shall be provided as applicable to the satisfaction of the City Engineer.

9.3 STREET LIGHTING

Street lighting shall be provided by the Developer to the guidelines established by the City Engineer. All costs of such, including, but not limited to, design, underground wiring, light standard base and luminaire shall be borne by the developer. The City shall approve of all street lighting plans as furnished by the developer to include size, spacing, height and type of pole/illuminaire.

9.4 CABLE TELEVISION

Service lines (suitable empty conduits placed and capped) for cable television shall be installed underground (location as approved by City Engineer) on all subdivisions regardless of whether or not cable television service is currently available.

9.5 STREET NAME AND TRAFFIC SIGNS

All street name signs and traffic directional signs shall be designated by the City and provided by the Developer. All costs of providing the signs, to include the installation, labor, materials, and other relevant City costs associated with determining the type, location, and associated work items shall be invoiced to and paid by the developer.

9.6 LANDSCAPING

Street landscaping shall be provided by the developer and a landscaping plan shall be submitted as part of the plan package for City review and approval.

ATTACHED DOCUMENTS

CITY OF GRANITE FALLS

DEVELOPER AGREEMENT

THIS AGREEMENT, by and between the City of Granite Falls, a municipal corporation, hereinafter referred to as "City", and _____, hereinafter referred to as "Developer":

WITNESSETH: That whereas the City of Granite Falls, a municipal corporation, provides water/sanitary/storm/gas or roadway service within this area, and the above-named Developer is preparing to construct an extension or modification or additions thereto, and said development requires the City's service;

WHEREFORE, THE PARTIES AGREE AS FOLLOWS:

1. Developer agrees to construct the water/sanitary/storm/gas or roadway system, or additions thereto, to be connected to the City's infrastructure, and to maintain such additions until such time as the improvements are accepted by the City, with the agreements conditioned as set forth below. The improvements, extension, or additions thereto, shall be located within that area commonly referred to as _____, which property is described in Exhibit "A" attached hereto and referred to hereinafter as "Premises".

2. As a condition precedent to City obligations under this agreement, the Developer shall construct the proposed water/sanitary/storm/gas/or roadway system, or additions thereto, within said premises in conformance with the minimum standards as set forth in the City's currently adopted Development Guidelines for Public Works Standards, as adopted together with any amendments thereto hereinafter made, and further to conform with the City's comprehensive planning documents, which agreement shall include oversizing of mains necessitated by the comprehensive plan.

3. The developer agrees that the construction of any infrastructure items, or additions thereto, shall not commence until the following conditions have been fulfilled:

    a. The developer shall furnish the City with four (4) sets of detailed plans for the proposed improvements, or additions thereto, at Developer's own expense, prepared by a qualified engineer currently licensed in the State of Washington.

    b. The above plans shall require the review and approval by the City and its Engineer, and the cost of such review shall be at the Developer's own expense.

    c. Minimum requirements for all plans, or additions thereto, submitted to the City for review are given on the plan checklist in the Development Guidelines for Public Works Standards.

    d. All permits have been received. Permits may include, but are not limited to, Right-of-Way Permit, Fill and Grade Permit, Stormwater Permit (issued by

the Department of Ecology for fill and grade activities on sites larger than 1 acre).

e. Construction requirements in addition to the City standards and details for developer extensions, as adopted, are as follows:

(1) All streets and/or roadways shall be graded to a minimum of two (2) feet above the crown of utility lines before installation of utility improvements, unless otherwise approved by the City Engineer.

(2) All lots shall be fully staked to assist all parties involved in the proper location of utility services.

(3) All contractors and subcontractors shall have a current Washington State Contractors License on file with the City.

(4) The Developer's proposed improvements, or additions thereto, on Premises shall not be connected to the City system until authorized by-the City, and such connection shall be performed only under the supervision and approval of the City.

f. For the purpose of applying RCW 4.24.115 to this Contract, the Developer and the City agree that the term "damages" applies only to the finding in a judicial proceeding and is exclusive of third party claims for damages preliminary thereto.

The Developer agrees to indemnify and hold harmless the City from all claims for damages by third parties, including costs and reasonable attorney's fees in the defense of claims for damages, arising from performance of the Developer's express or implied obligations under this Agreement. The Developer waives any right of contribution against the City.

It is agreed and mutually negotiated that in any and all claims against the City or any of its agents or employees by any employee of the Developer, any contractor or subcontractor, anyone directly or indirectly employed by any of them or anyone for whose acts any of them may be liable, the indemnification obligation hereunder shall not be limited in any way by any limitation on the amount or type of damages, compensation or benefits payable by or for the Developer or any contractor or subcontractor under Workman's Compensation Acts, disability benefits acts or other employees' benefit acts. The City and the Developer agree that all third part claims for damages against the City for which the Developer's insurance carrier does not accept defense of the City may be tendered by the City by the Developer who shall, if so tendered by the City, accept and undertake to defend or settle with the Claimant. The City retains the right to approve claim investigation and counsel assigned to said claim and all investigation and legal work product regarding said claim shall be performed under a fiduciary relationship to the City. In the event that the City agrees or a court finds that the claim arises from the sole negligence of the City, this indemnification shall be void and the City shall be responsible for all damages payable to the third party claimant. In the event that the City and the Developer agree or a court finds that the claim arises from or includes negligence of both the Developer and

the City, the Developer shall be responsible for all damages payable by the Developer to the third party claimant under the court findings, and, in addition thereto, the Developer shall hereunder indemnify the City for all damages paid or payable to the City under the court findings in an amount not to exceed the percentage of total fault attributable to the Developer. For example, where the Developer is 25% negligent, the Developer shall not be required to indemnify the City for any amount in excess of 25% of the claimant's total damages.

g. In the event the Developer in his operation damages or disrupts existing improvements, the repairs shall be made at the Developer's expense. In the event they are so damaged or the service disrupted and the Developer fails or is unable to immediately restore the service, then the Owners of the improvements may cause the repairs to be made by others and all costs for the same shall be at the Developer's own expense.

Where the construction crosses or is adjacent to existing utilities, the Developer shall exercise extreme care to protect such utilities from damage.

If any damage is done to an existing utility, the Developer shall notify the utility company involved, who will dispatch a crew to repair the damage at the Developer's expense. All costs for the same shall be at the Developer's own expense.

The Developer shall be aware that some existing City owned facilities are known to contain asbestos cement pipe. The Developer shall conduct all work related to existing asbestos cement pipe in strict accordance with current WISHA safety regulations and provisions contained within WAC 296-62-077. All costs related to work in compliance with established rules and regulations shall be the responsibility of the Developer. Demolition of existing asbestos cement pipe, if required, will be permitted only after the proper permits are obtained from the Puget Sound Air Pollution Control Agency. The Developer shall be responsible for all associated fees and permits required for asbestos removal and disposal. Work crews shall be provided with proper protective clothing and equipment. Hand tools shall be used, and the asbestos cement pipe shall be scored and broken in lieu of the sawing or other methods, which release fibers into the atmosphere. Waste asbestos pipe shall be buried in the trench. Asbestos pipe to be abandoned in place shall not be disturbed, except as noted herein, and shall remain in its original position.

The Developer is cautioned that all existing drainage systems, whether open ditch, buried pipe, or drainage structures, are not on record. It shall be the responsibility of the Developer to repair or replace all such systems found during construction, which are damaged by the Developer's construction in a manner, which is satisfactory to the City.

Where the Developer is allowed to use private property adjacent to the work, the property so used shall be returned to its original or superior condition. The Developer shall make all arrangements in advance with such property owners, to insure that no conflicts will ensue after the property is restored as described above. The Developer will be required to furnish the City with a

written release from said private property owners, if the City deems it to be necessary to obtain such document.

4. The construction of the Developer's proposed improvements, or additions thereto, on the Premises shall be supervised by the City in such a manner and at such times as the City deems reasonably necessary to assure that construction of the system will conform with the above-mentioned plans and specifications and minimum City Standards. The Developer herewith agrees to allow such inspections and agrees to cooperate providing reasonable advance notice on his construction schedule during the various construction phases as requested by the City. The Developer further agrees to reimburse the City for all engineering fees and expenses incurred by the City for such supervision.

5. The Developer's proposed improvements, or additions thereto, on Premises shall not be accepted for service and use until the same have been fully inspected and approved, and the following requirements have been performed:

   a. Submit to the City in Auto-CADD format, latest revision, the computer file supplied on a compact disc (CD) accompanied by the original "fixed line" mylars, with all changes from the original design clearly marked to reflect the as-built conditions. The Developer's Engineer shall certify the accuracy of the record drawings and shall affix his seal and signature.

   b. Payment of all permit fees and equivalent assessment charges and any other applicable City charges required for Premises.

   c. Payment of all plan check and inspection fees and related fees.

   d. Prepare and furnish the required easements in accordance with City's standard form, and furnish same to the City for approval by the City Attorney, along with the necessary recording fees.

   e. Furnish the City with an affidavit warranting there are no liens against the improvements constructed on Premises by the Developers, this affidavit shall be in the form prescribed by the City.

   f. Furnish the City with a Bill of Sale conveying the water/sanitary/storm or roadway system to the City, which shall include a two-year guarantee that the conveyed systems or improvements or additions thereto shall be free of defects in labor and materials. Form shall be as prescribed by the City.

   g. Payment of all applicable bills, invoices, fees, etc., have been paid in full.

6. In the event any warranty repairs are required, the City agrees, whenever feasible, to provide the Developer with reasonable notice before directly undertaking such repairs. The City reserves the right, however, to effect emergency repairs as deemed necessary by the City. The City shall be reimbursed by the Developer for all costs thereof.

7. Upon performing all requirements, including those as set forth in Paragraph 5 above, the City shall accept the water/sanitary/storm or roadway improvements, and agree therewith to operate and maintain said system.

SUBMITTED this ____ day of _____, 2000.

BY DEVELOPER: _____
Printed Name

_____
Signature

_____
Date

State of Washington)
) ss.
County of Snohomish)

On this _____ day of _____, 2000, before, me the undersigned, a Notary Public in and for the State of Washington, duly commissioned and sworn, personally appeared _____, to me known to be the person who executed the foregoing instrument, and acknowledged the said instrument to be his free and voluntary act and deed, for the uses and purposes therein mentioned, and acknowledged that he/she had the legal authority to execute said agreement on behalf of the "Developer".

WITNESS my hand and official seal affixed the day and year first above written.

_____
Notary Public in and for the State
(INDIVIDUAL) of Washington, residing at _____

CITY OF GRANITE FALLS

DEVELOPER AGREEMENT

EXHIBIT "A"

PLAT NAME: _____

DEVELOPER: _____

LEGAL DESCRIPTION:_____

_____

_____

_____

_____

_____

_____

_____

_____

_____

CITY OF GRANITE FALLS
Plan Review Checklist

NAME/NUMBER OF PROJECT _____

DATE SUBMITTED _____

The following represents most, if not all, of the plans, drawings, reports, calculations, etc., that could be required for your project. In many cases, you will be required to submit only a portion of these. You should consult with the City staff prior to starting the engineering design of the project and verify what is required. Sheets should be ordered and numbered as presented herein.

☐ General submittal requirements:

- Plans submitted for approval must not be stamped as "preliminary" or "not for construction".
- All plan sets must have a title/cover sheet.
- All sheets must be signed and dated.
- All sheets must have an "Approved for Construction" signature block in upper/lower right corner.

APPROVED FOR CONSTRUCTION

BY:_____DATE:_____

CITY OF GRANITE FALLS

These drawings are approved for five years from date of approval. The City reserves the right to make revisions, additions, deletions or modifications should construction be delayed beyond this time limitation. Minor Field changes may be required by the City based upon site conditions. The City, by approving these drawings, assumes no liability in regards to their accuracy or omissions.

- All plan sheets must have North Arrow and Scale Bar.
- Scale:
  - Plan view – 1"=50', but 1"=20' preferable
  - Profile view - 1"=20' horizontally and 1"=5' vertically
  - Overall or section cover page – variable, but 1"=100' preferable
- All sheets shall be maximum 24" x 36". Half-size (11" x 17") plan sets shall be made available prior to start of construction. Provide a minimum of four (4) full-size copies of the plans for each submittal.
- Final approved drawings shall be on mylar and given to the City for signature.
- All sheets must have a title block on the bottom or right edge. Title block should include:
  - Company Name and Contact Information
  - Revision Block including the following:
    - Revision Number
    - Date
    - Description of Revision
    - Made By/Checked By
  - Project Information Block – This block contains text noting scale, drawing name, drafter/designer initials, and approving engineer's initials
  - Engineers seal

- Scale
- Sheet title, including:
  - Sheet title, project name, city project number

☐ Title/cover Sheet:
- Project name
- Title of plans (e.g., "Road and Storm Drainage Improvements")
- Section, Township, and Range
- "City of Granite Falls, Snohomish County, Washington"
- City Project number
- Date of Original Plans
- Revision dates
- Owner's (developer's) name, address, and phone
- Engineer's name, address, and phone
- Approval block (positioned in lower right corner)

☐ Notes, Index, Conditions Sheets:
- Conditions of approval (beginning at top left)
- Vicinity Map (Granite Falls) – not to scale
- Soils Map – not to scale
- Listing of all pertinent utility companies, phone
- Contact information for all involved owners, trustees, surveyors, and engineers (civil, geotechnical, structural)
- "Recommended for Approval" block
- "Approved for Construction" block (lower right corner)
- Index of all sheets with sheet numbers and titles
- Legend including abbreviations and symbols (APWA Standard Symbols)

☐ Overall Survey Control Sheet - (No approval block required)
- This <u>single</u> sheet should show entire project and surrounding areas
- Indicate graphically and by written text the basis for the survey control including:
  - Basis of position – showing street breakdown
  - Basis of bearing – showing boundary dimensions and bearings
  - Horizontal datum (NAD 83/91) and vertical datum (1988 NAVD) (bench mark elevation and location),
  - Monumentation – found and set
- Features of the sheet that should be identified and labeled by the following text:
  - Lots – numbers
  - Tracts – letters
  - Easements – dashed lines with labels
  - Adjacent parcel/right-of-way lines – dashed lines with parcel numbers
  - Adjacent parcels names
  - Street names – as approved by the City

☐ Individual Survey Control/Calculation Sheets:

- For smaller projects, information can be included on the Overall Survey Control Sheet
- Bearing, length and curve data (including delta, radii, length) for right-of-way centerlines
- Right-of-way width
- Stationing set at 100-foot increments, with tick marks at 50 feet
- Street names, street classifications, lot numbers
- Square Footage (or acreage) of tracts
- Each lot, tract, and easement boundary should be labeled with its length and bearing.
- Each tract should have its purpose noted (i.e. public/private; park, landscape, etc.).
- Each tract should have its boundary and buffer clearly labeled.
- Adjacent parcel names
- Curb return control data with gutter elevations should be provided on sheet(s) separate from other survey control sheets. (begin/end curb return – BCR/ECR)
- Monument locations (existing and proposed)

☐ Overall Temporary Erosion and Sediment Control Sheet:

- Entire site showing ESC sheet breakdown
- Sensitive areas and associated buffers
- All tracts and parcels (including adjacent properties)
- TESC features are not required on this sheet.

☐ Individual Temporary Erosion and Sediment Control Sheets:

- Scale, legend, parcel lines, lot numbers, street names
- Standard Erosion and Sedimentation Control Notes
- Existing and finished grade contours. The existing contours should be screened.
- Sensitive areas and their associated buffers
- Surface runoff flow direction noted by flow arrows
- Run-on from upstream properties
- Show all TESC measures. These should include, but are not limited to:
  - Clearing limits
  - Cover measures (temporary and permanent)
  - Perimeter protection
  - Traffic area stabilization
  - Sediment retention (ponds, traps, riser and outlet details)
  - Surface water control (temporary piping, conveyance ditches, interceptor swales, temporary outfalls)
  - Significant features (i.e. rock walls, retaining walls)
  - Un-contained areas
  - Drainage basin boundaries for each discharge
  - Other BMPs
  - Sediment retention sizing calculations (also included in SWPPP)

☐ Overall Clearing and Grading Sheet:
- Entire site showing sheet breakdown
- Sensitive areas and associated buffers
- All tracts and parcels (including adjacent properties)
- Clearing and grading features do not need to be shown on this sheet.

☐ Individual Clearing and Grading Sheets:
- Scale, legend, parcel lines, lot numbers, street names, construction easements
- Existing contours (minor – 2’, major – 10’) screened or shaded
- Proposed contours (minor – 2’, major – 10’)
- Plan view:
  - Existing and proposed contours (existing contours screened back)
  - Sensitive areas and associated buffers
  - All other significant topographic features
  - Walls, type with top and bottom elevation labeled (Note indicating a separate building permit required for walls)
- Profile/cross sections (specific locations as required by City
  - Existing and proposed contours (existing contours screened back)

☐ Stormwater Site Plan / Stormwater Pollution Prevention Plan:
- As specified in 2005 DOE Stormwater Management Manual for Western Washington
- Text must clearly describe assumptions, means of compliance, etc.,
- Report must include drawings of the facilities, including details
- All critical data on computer sheets should be identified to assist reviewer
- Stormwater Site Plan must be as-built at end of project to indicate constructed facility performance

☐ Geotechnical Report:
- Must be reviewed by geotechnical consultant
- Pavement design
- Structural assumptions for walls and vaults
- Site hazards and stability issues (existing or proposed)
- Erosion and Sedimentation Control
- Structural fill
- Groundwater
- Geotechnical Engineer-of-Record must stay with project through construction per UBC, Chapter Appendix 33

☐ Storm Drainage Overall Plan Index Sheet:
- Entire site showing SD sheet breakdown
- All storm utilities shown (no details)
- All ponds, lots, streets, and tracts labeled

☐ Overall Road and Storm Drainage Plan Sheets:

- Entire site with existing and proposed contours
- Storm components shown and labeled (number and type)
- All ponds, lots, streets, and tracts labeled

☐ Individual Road and Storm Drainage Plan and Profile Sheets:

- Each sheet must show plan view with roadway or drainpipe centerline profile below
- Connection to existing improvements (separate sheets)
- Plan view must show:
  - All parcels, lots, and tracts labeled
  - Clearing limits
  - Existing and proposed contours (minor – 2’, major – 10’) 50’ beyond site
  - Stationing
  - Easements, width and type
  - Sensitive areas and associated buffers
  - Walls (see GP sheets for type and elevations)
  - Call-outs to other sheets for details and match lines
  - Roadway features identified in plan view (with symbols, text where needed):
    - Street names and classification
    - Right-of-way and pavement width boundary
    - Curb and gutter (driveway curb cuts, if known)
    - Sidewalks, ramps, trails, walkways
    - Flow direction arrows at curb returns
    - Driveway approaches, width
    - Mailbox locations
    - Utility structure locations
    - Traffic calming features
    - Major pavement markings (crosswalks, textured pavements)
    - Pavement type (concrete, gravel, asphalt)
    - High/low point
    - Fences, guardrail, or handrails
    - Pavement tapers, transitions

  - Storm drainage features identified in plan view (with symbols, text where needed):
    - Catch basins, inlets, manholes - number and type
    - Pipe length, size, type, flow direction, and slope
    - Outfalls
    - Outline of underground facilities
    - Special storm components (arched culverts, dispersal trench, outfalls, weirs, headwalls, etc.,)
    - Wall and yard drain stub invert elevations
    - Individual downspout stub invert elevations
    - Flow direction arrows
    - Call-outs to other sheets for details

        - Facility (pond, vault, sand filter, etc.,) name/number
        - Facility features (general on this sheet) – access roads, manholes, pipes, inlets and outlets, spillways, 100-year (design) water surface elevation, water quality water surface elevation, bottom elevation

- Profile view must show:
    - Existing and proposed grade elevations at road/drainpipe centerline
    - Street name and classification
    - Stationing
    - Slope (%)
    - Station equations at intersections
    - Vertical curve data:
        - Length, low/high point and station, PVI station and elevation, algebraic difference, K Value
        - PVC, PRC, and PVT – station and elevation
        - Street classification, design speed, required stopping sight distance, superelevation
    - Utilities – size and type labeled
    - Storm system in profile view:
        - Length, size, type, and slope of each pipe/feature
        - Structure number, station, offset, rim elevation, invert elevations including IN/OUT, pipe diameters, pipe materials
        - Underground vaults, ponds, tanks with elevations, inverts
        - Callouts to detail sheets

☐ Stormwater Facility (ponds, vaults, or tanks) Sheets:

- Plan view (No plan view required for tanks):
    - Existing and finished grade contours
    - Easement and tract boundaries
    - Sensitive areas and their associated buffers
    - Access roads, ramps, walls, and buildings
    - Identify cells and dividing berms or baffle walls (vaults)
    - Bottom, top of dead storage, water quality surface, 100-year water surface, berm, spillway, and pipe invert elevations
    - Access hatches, manholes, and risers (vaults)
    - Dimensions, slope, curvature, and materials for access roads, trails, spillway
    - Interior dimensions (vaults)
    - Structures – name, type, size, rim and invert elevations or callouts to detail sheets
    - Pipes – length, type, size, slope, inverts
    - Walls – type, top and bottom elevation
    - Outfalls – size, material, energy dissipation
    - Signage, fences, gates, bollards
    - Special notes regarding geotechnical details for berm construction, etc.,
    - A table providing the following information:

    - Facility type and name
    - Required live storage volume
    - Design live storage volume
    - 100-year (design) water surface elevation
    - Overflow water surface elevation
    - Emergency overflow water surface elevation
    - Berm or inside top of vault elevation
    - Required dead storage volume (WQ)
    - Design dead storage volume (WQ)
    - Top of dead water surface (WQ)
    - Sediment storage elevation
    - Bottom elevation

- Profile/Cross sections
  - Include minimum 2 sections per facility
  - Scale exaggeration 10:1 ratio maximum
  - Sections should go well beyond the limits of the facility to include adjacent walls, roads, etc.,
  - Existing and finished grade contours
  - Berm elevation and width
  - Inside top of vault elevation (vaults)
  - Interior dimensions (vaults)
  - Foundation, walls, and lid must be shown to scale on vaults with callout to structural plans and details (vaults)
  - Wall penetrations (vaults)
  - Slopes (horizontal:vertical)
  - Tract/easement boundaries
  - Sensitive areas and associated buffers
  - Call-outs to details
  - Label:
    - Bottom elevation
    - Sediment storage depth
    - Top of dead water surface (WQ)
    - 100-year (design) water surface elevation
    - Overflow water surface elevation
    - Emergency overflow water surface elevation
    - Pipe type, size, length, slope, inverts
    - Structure name, rim elevation, invert elevations
    - Special features (drains, beveled outfalls, spall pads, valves, sleeves, etc.,)

- Individual control structure detail sheets:
    - Call-outs to details
    - Plan view indicating (drawn to scale):
      - Northing/easting OR angle between pipes

        - Ladder and clearances
        - Cleanouts, elbow restrictors, and risers
        - Knockout diameter
        - Platforms
    - Profile view indicating (drawn to scale):
        - Bottom, rim, platform elevations
        - 100-year (design) water surface elevation
        - Overflow water surface elevation
        - Emergency overflow water surface elevation
        - Cleanouts, elbow restrictors, and risers
        - Restrictor elbow invert, diameter
        - Orifice elevation, diameter
        - Pipe inverts and sizes
        - Ladder steps

☐ Sanitary Sewer Overall Plan Index Sheet:
- Entire site showing SS sheet breakdown
- All Sanitary utilities shown (no details)
- All ponds, lots, streets, and tracts labeled

☐ Overall Road and Sanitary Sewer Plan Sheets:
- Entire site with existing and proposed contours
- Sanitary Sewer components shown and labeled (number and type)
- All ponds, lots, streets, and tracts labeled

☐ Individual Road and Sanitary Sewer Plan and Profile Sheets:
- Each sheet must show plan view with roadway or pipe centerline profile below
- Connection to existing improvements (separate sheets)
- Plan view must show:
    - All parcels, lots, and tracts labeled
    - Clearing limits
    - Existing and proposed contours (minor – 2’, major – 10’) 50’ beyond site
    - Stationing
    - Easements, width and type
    - Sensitive areas and associated buffers
    - Walls (see GP sheets for type and elevations)
    - Call-outs to other sheets for details and match lines
    - Roadway features identified in plan view (with symbols, text where needed):
        - Street names and classification
        - Right-of-way and pavement width boundary
        - Curb and gutter (driveway curb cuts, if known)
        - Sidewalks, ramps, trails, walkways
        - Driveway approaches, width
        - Mailbox locations

        - Utility structure locations
        - Traffic calming features
        - Major pavement markings (crosswalks, textured pavements)
        - Pavement type (concrete, gravel, asphalt)
        - High/low point
        - Fences, guardrail, or handrails
        - Pavement tapers, transitions

    - Sanitary Sewer features identified in plan view (with symbols, text where needed):
        - Manholes - number and type
        - Pipe length, size, type, flow direction, and slope
        - Connection to existing system
        - Individual side sewer stub invert elevations
        - Call-outs to other sheets for details

- Profile view must show:
    - Existing and proposed grade elevations at road/pipe centerline
    - Street name and classification
    - Stationing
    - Slope (%)
    - Station equations at intersections
    - Vertical curve data:
        - Length, low/high point and station, PVI station and elevation, algebraic difference, K Value
        - PVC, PRC, and PVT – station and elevation
        - Street classification, design speed, required stopping sight distance, super-elevation
    - Utilities – size and type labeled
    - Sanitary system in profile view:
        - Length, size, type, and slope of each pipe/feature
        - Structure number, station, offset, rim elevation, invert elevations including IN/OUT, pipe diameters, pipe materials
        - Callouts to detail sheets

☐ Water Overall Plan Index Sheet:
- Entire site showing SS sheet breakdown
- All Water utilities shown (no details)
- All ponds, lots, streets, and tracts labeled

☐ Overall Road and Water Plan Sheets:
- Entire site with existing and proposed contours
- Water components shown and labeled (number and type)
- All ponds, lots, streets, and tracts labeled

☐ Individual Road and Water Plan and Profile Sheets:

- Each sheet must show plan view with roadway or pipe centerline profile below
- Connection to existing improvements (separate sheets)
- Plan view must show:
  - All parcels, lots, and tracts labeled
  - Clearing limits
  - Existing and proposed contours (minor – 2’, major – 10’) 50’ beyond site
  - Stationing
  - Easements, width and type
  - Sensitive areas and associated buffers
  - Walls (see GP sheets for type and elevations)
  - Call-outs to other sheets for details and match lines
  - Roadway features identified in plan view (with symbols, text where needed):
    - Street names and classification
    - Right-of-way and pavement width boundary
    - Curb and gutter (driveway curb cuts, if known)
    - Sidewalks, ramps, trails, walkways
    - Driveway approaches, width
    - Mailbox locations
    - Utility structure locations
    - Traffic calming features
    - Major pavement markings (crosswalks, textured pavements)
    - Pavement type (concrete, gravel, asphalt)
    - High/low point
    - Fences, guardrail, or handrails
    - Pavement tapers, transitions

  - Water features identified in plan view (with symbols, text where needed):
    - Meters, valves, hydrants, backflow prevention,
    - Pipe length, size, type
    - Connection to existing system
    - Individual service connections with elevations
    - Call-outs to other sheets for details

- Profile view must show:
  - Existing and proposed grade elevations at road/pipe centerline
  - Street name and classification
  - Stationing
  - Slope (%)
  - Station equations at intersections
  - Vertical curve data:
    - Length, low/high point and station, PVI station and elevation, algebraic difference, K Value

        - PVC, PRC, and PVT – station and elevation
        - Street classification, design speed, required stopping sight distance, super-elevation
    - Utilities – size and type labeled
    - Water system in profile view:
        - Length, size, type, and slope of each pipe/feature
        - Structure number, station, offset, elevation, pipe diameters, pipe materials
        - Callouts to detail sheets

☐ Structural Sheets:
- Structural calculations, with supporting geotechnical data and assumptions
- Structural drawings showing elevations, walls, bottom/top slabs, re-steel, ties, water stops, foundation material, backfill, perimeter drains, penetrations, etc.

☐ Road and Storm <u>Detail</u> Sheets:
- Road details:
    - Typical road cross-sections full-width of right-of-way including surfacing (wearing course, top course, base course, and subgrade preparation)
    - Trail surfacing and subgrade preparation, steps, bridges, etc.,
    - Curb and gutter
    - Sidewalks, stairways
    - Driveway approaches
    - Wheelchair ramps
    - Transitions
    - Fences, guardrails, handrails
    - Geotechnical notes and sections, where required
    - Street tree planting notes and details
    - Mailbox assemblies including sidewalk widening
    - General roadway construction notes
    - Monuments
    - Patch details

- Storm drainage details:
    - Catch basin, inlets, and manholes
    - Frame and grate/ring and lid
    - Details indicating structure orientation beneath curbs
    - Stormwater facility access roads
    - Roof drain laterals connection to public storm system
    - Spillway
    - Infiltration/dispersal trenches
    - Removable and fixed bollards
    - FROP-T flow restrictor/spill control device, including shear gate
    - Elbow restrictor

- Ladders and steps
- “Jailhouse window”
- Access risers
- Signs (pond, wetland, wildlife, confined space entry, etc.,)
- Overflow structure (“birdcage”)
- General drainage notes
- Planting notes
- Geotechnical notes for pond berm construction
- Trench detail

☐ Non-Motorized Circulation Plan, when required:
- Plan view of entire project site designating all non-motorized traffic routes
- Legend, sign details and locations

☐ Traffic Signing Plan:
- Plan view of entire project with sign type, locations, size

☐ Channelization and Pavement Marking Plan:
- Plan view of project with striping shown. Indicate location, width, color, type, etc.,
- Crosswalk, handicap stalls, etc., details

☐ Traffic Calming Plan:
- Plan view of project with calming measures shown
- Traffic calming details (traffic circle, speed humps, etc.,)

☐ Illumination Plan:
- Prepared by Snohomish County PUD
- Location of poles
- Calculations

☐ Landscaping and Irrigation Plans:
- Prepared in accordance with the City Planning Commission

☐ Wetland Mitigation Plan (WM):
- Prepared in accordance with Department of Community Development

☐ Reference Sheets (R):
- Off-site grading and drainage improvements including transitions and connections to existing roads and drainage features
- Any relevant sheets adding to the general understanding of the project

CITY OF GRANITE FALLS

TRAFFIC IMPACT ANALYSIS GUIDELINES

The following are general guidelines for use in the submittal of a traffic impact analysis to the City of Granite Falls. Specific locations to be included in the analysis, boundaries of the study area, etc., will be determined by the City of Granite Falls as part of the application process. The applicant shall meet with the City Public Works Superintendent or City Engineer to determine the need for a traffic study and items to be included. Modifications to the attached guidelines may be incorporated at such time.

Typically, the threshold for determining whether a traffic impact analysis is required will be 10 peak hour trips (inbound and outbound) and/or 100 daily trips. This would include those developments in the rough range of 10 or more single-family residences, 14 or more apartments, or 4,000 square feet of office space, for example. Additionally, a traffic analysis may be required by the City engineer for a development smaller than threshold above. Trip generation and traffic volumes will be measured in Passenger Car Equivalents (PCE). Vehicles with five (5) or more axles shall be assessed a PCE of four (4). For example twenty daily trips with a six-axle vehicle shall be assumed to contribute eighty daily trips for the purposes of assessing the traffic analysis threshold. Passenger Car Equivalents of other vehicles will be calculated in accordance with the ITE Trip Generation Manual and/or the Highway Capacity Manual and require approval of the City Engineer.

Trip generation shall be based on the current edition of the ITE Trip Generation Manual using the average trip rate. The regression equations will be used when average trip rates are not available. Trip generation for unusual land uses which are not found in the Trip Generation Manual shall be estimated from similar types of uses, field studies of similar uses, or based on number of employees, deliveries, expected clientele, etc., as appropriate. Discussion with the City of Granite Falls with respect to this issue can be included in the application screening process.

Level of service calculations shall be conducted using methodologies presented in the current edition of the Highway Capacity Manual. Level of service for signalized and unsignalized intersections should be expressed in terms of stopped delay per vehicle. Worksheets/computer print-outs of the capacity analyses should be included with the traffic impact analysis.

Level of service calculations will typically be required at the major intersections (signalized locations or major stop sign locations) which will be impacted by 25 or more total peak hour trips from the proposed development.

The City of Granite Falls considers level of service "D" to be acceptable. Appropriate mitigation should be proposed to maintain this level of service upon completion of the

development. Exceptions to level of service "D" will be considered by the City at those locations where the potential mitigation (such as a traffic signal) is not reasonable or desirable. Typically, mitigation will be based on a fair-share or proportionate basis. Exceptions to this will be along the frontage of the development and for any improvements at the development's access(es) (such as turn storage lanes, channelization, etc.) which will be entirely the responsibility of the development.

Peak hour turning movement counts shall be conducted as part of the analysis for those locations, which will be analyzed with respect to level of service. The Consultant may use counts conducted by or available from the City if less than 12 months old. Appropriate growth factors and/or inclusion of pipeline projects shall be used for projecting future volumes on roadways or at intersections for the project's horizon year. Special conditions such as project phasing or inclusion of adjacent projects may require additional analysis.

The traffic impact analysis shall be prepared under the direction of an active member of the Institute of Transportation Engineers (ITE).

TRAFFIC IMPACT ANALYSIS OUTLINE

The following describes a general outline for use in the preparation of traffic impact analyses for the City of Granite Falls. This outline is not intended to be all inclusive nor will all items be applicable for all types of development. The City of Granite Falls reserves the right to request additional information for unique or unusual developments.

I. INTRODUCTION/PROJECT DESCRIPTION

Elements to be included as part of narrative or as figure(s).

- Project name and proponent - Location of project
- Vicinity map
- Proposed uses, if known (e.g., names of stores)
- Project magnitude (square footage, number of units, etc.)
- Access locations
- Current and proposed zoning
- Description of current use of property
- Reduced copy of site plan (if available)
- Roadways/intersections to be impacted and reviewed in the analysis
- Horizon year of project (completion and occupancy); state phasing and time-frame if applicable
- Parking (if applicable)

II. INVENTORY OF EXISTING CONDITIONS

Elements to be included as part of narrative or as figure(s).

- Description of impacted streets in the area (number of lanes, width, pedestrian facilities, speed limit, lighting, etc.)
- Daily traffic volumes (if available), or estimated from peak hour counts
- Peak hour counts (as appropriate)
- Accident history (when required by the City)
- Capacity analyses at critical intersections
- Transit service

III. DEVELOPMENT IMPACTS

Elements to be included as part of narrative or as figure(s).

- Trip generation
- Trip distribution/assignment
- Capacity analyses (with and without the project) at critical locations for the horizon year
- Projected daily traffic volumes and peak hour volumes (with and without the project) for the horizon year

- Need for turn storage lanes at access(es) (if appropriate)
- Other concerns (if applicable, such as cut-through traffic in residential areas)

IV. CONCLUSIONS/RECOMMENDATIONS

- Brief summary of above analyses with recommendations

V. MITIGATION

- Mitigation shall be in accordance with Granite Falls Municipal Code, Granite Falls Comprehensive Plan, State Law and interlocal agreements.

VI. OTHER

- Unusual developments may require analysis of off- peak hours, the AM peak hour, weekends, or ability to serve large trucks, for example, if deemed necessary by the City of Granite Falls. Studies performed as part of an EIS document may also require additional analysis.

Three copies of the traffic impact analysis shall be submitted to the City of Granite Falls.

The following two forms related to traffic impact analysis and mitigation offers are available on the web at the following address:

http://www1.co.snohomish.wa.us/Departments/Public_Works/Divisions/TES/ProgramPlanning/3066B/

1. County Traffic Study Requirements for Developments in Granite Falls.pdf

2. City of Granite Falls Traffic Study Requirements for Development in County.pdf

Snohomish County Traffic Worksheet and Traffic Study Requirements for Developments in the City of Granite Falls

Snohomish County government, through an interlocal agreement (ILA) with the City of Granite Falls, may request traffic mitigation measures from any new development in the city that impacts roads in the unincorporated county. The City will impose the requested mitigation to the extent that the City determines that the mitigation is reasonably related to the impacts of the development. To determine the impacts, and to determine reasonable mitigation measures, the City of Granite Falls requires a traffic study from any development in the city that may have impacts on county roads. This 'traffic study' may be as simple as completing sections one and two of the county traffic worksheet below, or having a professional traffic engineer conduct a formal traffic study consistent with the requirements in section three below.

- If a development generates less than ten peak-hour trips and the applicant chooses Option A for mitigation payment (standard payment by percent of county impact fee), then the applicant will generally only have to fill out the first two sections of this traffic worksheet and complete a mitigation offer (see section four).
- However, if a development generates more than ten peak-hour trips, or if the applicant chooses Option B for mitigation payment (comprehensive impact analysis), then the applicant will have to fill out the first section of this worksheet, complete a separate traffic study consistent with the requirements in section three, and complete a mitigation offer (see Section Four).
- Applicants should submit all documents *to the City* as part of their initial submittal.
- Traffic study requirements for impacts on county roads are based on the County's traffic mitigation ordinance (Chapter 30.66B) and the city/county ILA. At the end of this document find references to the county contacts and county web site (sources for may of the documents related to traffic mitigation).
- Following review of the documents submitted, the County may request supplemental information and analysis as necessary to determine the impacts of the development in accordance with the city/county ILA. The City will require the proposed development to submit the supplemental information and analysis to the extent that the City determines that it is necessary to determine the impacts of the development.

Section One (1) Worksheet General Information

1. Name of Proposed Development _____

   City Development File Number (if known)_____

2. Name, Address and Phone Number of Applicant_____

   _____

   _____

3. Development Site Address_____

   _____

4. Is it a residential or commercial development?_____

5. Description of Development (size and specific type)_____

   _____

6. How many new vehicle trips are expected to be generated by the proposed development? (For many common types of developments this information can be provided by the city or the county. For more complex developments trip generation may have to be determined under section three below)

   _____ AM Peak Hour_____ PM Peak Hour_____ Average Daily Trips (ADT)

7. Proportionate Share Impact Mitigation: All applicants have two options in determining the amount of their traffic mitigation payment:

   _____ For determining the amount based on a percentage of the county fee go to section two.

   _____ For determining the amount based on a comprehensive traffic study go to section three.

Section Two (2) Proportionate Share Determined by Percentage of County Impact Fee

2(a) Calculation of Payment Amount

1. Standard default estimated percentage of trips impacting county roads 60 %

or

2. Other Percentage: (Note: See author's qualifications in section three below.) Estimated percentage of trips impacting county roads from attached trip distribution: _____ %

3. Development New Average Daily Trip Generation (ADT)_____

4. Type of Development (Residential or Commercial)_____

5. County Commercial Fee Rate $_____ 6. County Residential Fee Rate $_____

(Note: Consistent with county code and the ILA, developments pay the rate in effect at the time of their submittal. As of 2/1/06 the rates were $309 for commercial developments and $364 for residential developments. Through ordinance, the County Council can change these rates at any time, so consult with the County or look at Snohomish County Code 30.66B.330 to find the latest fee rates.)

7. Calculation of Proportionate Share Impact Mitigation

_____	×	_____	×	_____	=	$_____
#1 or #2 above: % of trips		#3 above: ADT		#5 or #6 above: Fee Rate		proportionate share mitigating payment

2(b) Determining whether or not an additional traffic study is necessary

Will the development generate more than 10 peak-hour trips *or* are there other impacts that need to be addressed (e.g., level of service, safety, or access and circulation)

_____ No. Skip section three and go to section four.

_____ Yes. Read the introduction to section three and skip to section 3(b).

Section Three (3) Traffic Study Requirements

Introduction: This section outlines requirements for traffic studies for impacts on County roads. If an applicant chooses (or is required) to complete a traffic study, then it should be submitted along with this worksheet and a mitigation offer. (Note on Author's Qualifications: A traffic study under this section must be conducted by an engineer licensed to practice in the state of Washington with special training and experience in traffic engineering and, preferably, membership in the institute of transportation engineers. For individuals/firms not on the City's approved list, the developer will provide, with the traffic study, the credentials of the individual or firm performing the traffic study certifying compliance with these qualifications.)

3(a) Proportionate share impact mitigation based on comprehensive traffic study

1. Development's Trip Generation and Distribution. Determine the PM peak-hour trip generation and distribution for the development consistent with Section 3(b) below.
2. Impacted Improvements. Determine which of the road sections with planned improvements in the county's impact fee cost basis (Transportation Needs Report Appendix D) are impacted by three or more development-generated *directional* PM peak hour trips (PM PHT).
3. Current Counts. For each impacted improvement, provide current traffic counts to determine the PM PHT.
4. Reserve Capacity. Determine "reserve capacity" for each impacted improvement by subtracting the current PM PHT from the maximum service volume (MSV) for the existing facility. Reserve capacity is set to zero if current PM PHT exceeds the MSV. For MSVs see County DPW Rule 4224.
5. New Capacity. New capacity is the incremental increase in PHT that could be accommodated with the planned improvement. Determine the new capacity of each impacted improvement by subtracting the current MSV from the future MSV after the improvement.
6. Chargeable Capacity. For each impacted improvement, add the reserve capacity to the new capacity.
7. Final Adjusted Cost. Find the cost of each impacted improvement and make any adjustments used by the County for tax credits (see Transportation Needs Report Appendix D).
8. Capacity Cost per Peak-Hour Trip. For each impacted improvement, determine the capacity cost per PM PHT by dividing the final adjusted improvement cost by the chargeable capacity.
9. Traffic Impacts. From step one above, take the *total* number of PM PHT (in both directions) impacting each planned improvement.
10. Proportionate Share. For each impacted improvement, determine the proportionate share impact mitigation by multiplying the capacity cost per peak-hour trip by the number of PM PHT impacting the improvement.

3(b) Trip Generation and AM and PM Peak Hour Trip Distribution and Assignment

Calculate AM, PM and Daily trip generation consistent with the ITE Trip Generation Handbook and Snohomish County Public Works Rule 4220. Determine the trip distribution and assignments consistent with the County's document titled "Format for Trip Distributions"(available at County web site, see below).

- Within the developments transportation service area (TSA) the distributions will be carried out to each key intersection at which the approach or departure volumes on any leg have three (3) or more peak hour trips. Get the most current list of key intersections on the web site described below. Trips should be distributed onto the road system as it is expected to be in six years.
- The distribution should be a schematic map showing the broad distributions of trips in terms of percentages on different roads. Show all City boundaries.
- The assignment should be a schematic map with the impacted key intersections identified by ID# and turning movements for each shown in separate diagrams on the same page or on different pages. The assignment should also be presented in tabular form listing each intersection by intersection ID#, and the number of trips at each movement.

3(c) Additional Analysis for Developments Generating More Than Fifty (50) Peak Hour Trips

For large developments (i.e., those generating more than 50 peak-hour trips), the County may request mitigation for impacts on the level of service of County roads, documented safety locations (the County calls such locations "inadequate road conditions" or "IRCs"), and access or circulation. The traffic study requirements below are intended to disclose impacts. Based on this information the County may request through the City that the applicant provide additional information showing possible mitigation measures. If any off-site improvements were needed for mitigation the County would work with the applicant to determine requirements for right-of-way, construction plans, right-of-way use permits, construction/maintenance bonds, and other issues.

Impacts on Level of Service (LOS) of County Arterials

Contact Snohomish County Public Works for the most current list of arterial units in arrears and critical arterial units. Identify any arterial units in arrears or critical arterial units impacted by three or more directional peak-hour trips.

Impacts on Inadequate Road Conditions

Contact Snohomish County Public Works for a list of the current IRCs. Identify any IRCs impacted by three or more peak-hour trips. Note: Unlike LOS impacts in which at least three or more peak hour trips have to be added in one direction to require disclosure (e.g., 3 westbound), for IRCs, any three peak hour trips added to IRC locations are considered an impact for which disclosure is necessary (e.g., 2 westbound plus 1 eastbound).

Impacts on Access or Circulation

The County may request improvements to existing roads to provide safe and efficient access and/or circulation. In some instances, the County may request provisions for future County roads identified in the Comprehensive Plan or in Small Area Transportation Studies. If so, the County will request specific additional information through the City.

Section Four (4) Traffic Mitigation Offer to Snohomish County

The applicant should complete a traffic mitigation offer to Snohomish County that summarizes the mitigation identified in the county traffic worksheet and any additional traffic study. This will facilitate timely review of the development and processing of the application. The form to use for the mitigation offer is titled "Traffic Mitigation Offer to Snohomish County." This form is typically provided to all applicants along with this traffic study checklist. In addition, copies are available from the county contacts or the Snohomish County web site shown below.

Additional Information

County Web Site

Snohomish County Public Works has a web site with many documents related to traffic studies and mitigation requirements for developers. From the Snohomish County Home Page go to:

Departments/Public Works/Divisions/TES/ProgramPlanning/3066B

County Contacts

- Deb Werdal, Snohomish County DPW Traffic, 3000 Rockefeller M/S 607, Everett WA 98201, (425) 388-3184, debra.werdal@co.snohomish.wa.us
- John Davis, Snohomish County DPW Program Planning, 3000 Rockefeller M/S 607, Everett WA 98201, (425) 388-3488 extension 4507, john.davis@co.snohomish.wa.us

The City of Granite Falls Traffic Worksheet and Traffic Study Requirements for Developments in Snohomish County

The City of Granite Falls, through an interlocal agreement (ILA) with Snohomish County, may request traffic mitigation measures from any new development in the unincorporated County that impacts the City's streets. The County will impose the requested mitigation measures to the extent that the County determines that the mitigation is reasonably related to the impacts of the development. To determine the impacts, and to determine reasonable mitigation measures, Snohomish County requires a traffic study from any development in theCounty that may have impacts on the City's streets. This 'traffic study' may be as simple as completing sections one and two of the City traffic worksheet below, or having a professional traffic engineer conduct a formal traffic study consistent with the requirements in section three below.

- If a development generates less than ten peak-hour trips and the applicant chooses Option A for mitigation payment (standard payment by percent of the City impact fee), then the applicant will generally only have to fill out the first two sections of this traffic worksheet and complete a mitigation offer (see section four).
- However, if a development generates more than ten peak-hour trips, or if the applicant chooses Option B for mitigation payment (comprehensive impact analysis), then the applicant will have to fill out the first section of this worksheet, complete a separate traffic study consistent with the requirements in section three, and complete a mitigation offer (see Section Four).
- Applicants should submit all documents *to the County* as part of their initial submittal.
- Traffic study requirements for impacts on City streets are based on the City's traffic mitigation ordinance and the County/City ILA. At the end of this document the address of the County web site is shown at which copies of the ILA are available.
- Following review of the documents submitted, the City may request supplemental information and analysis as necessary to determine the impacts of the development in accordance with the County/City ILA. The County will require the proposed development to submit the supplemental information and analysis to the extent that the County determines that it is necessary to determine the impacts of the development.

Section One (1) Worksheet General Information

1. Name of Proposed Development _____

   County Development File Number (if known)_____

2. Name, Address and Phone Number of Applicant_____

   _____

   _____

3. Development Site Address_____

   _____

4. Does this development have frontage on a City street?_____

5. Description of Development (size and specific type)_____

   _____

6. How many new vehicle trips are expected to be generated by the proposed development? (For many common types of developments this information can be provided by the County or the City. For more complex developments trip generation may have to be determined under section three below)

   _____ AM Peak Hour_____ PM Peak Hour _____ Average Daily Trips (ADT)

7. Passenger Car Equivalents (PCE) of ADT _____ [Trucks with 5+ axles = 4 PCEs and Trucks or Buses with 3 or 4 axles = 2 PCEs]

8. Proportionate Share Impact Mitigation: Choose option A or B.

   _____ Option A based on standard payments by percent: go to section two

   _____ Option B based on comprehensive impact analysis: go to section three

Section Two (2) Proportionate Share Determined by Percentage of the City Impact Fee

2(a) Calculation of Payment Amount

1. Standard default estimated percentage of trips impacting the City streets based on subareas (See below) _____%

or

2. Other Percentage: (Note: See author's qualifications in section three below.) Estimated percentage of trips impacting the City streets from attached trip distribution: _____ %

Sub-Area ID#	* County Traffic Shed	Percentage for Developments that Extract Natural Resources	# Percentage for All Other Types of Developments
CO-GF-1	Parcels taking access directly or indirectly from the Mountain Loop Highway	98%	90%
CO-GF-2	Parcels taking access directly or indirectly from Menzel Lake Road	70%	70% ≤ 1 miles 50% ≤ 3 miles 25% > 3 miles
CO-GF-3	Parcels taking access directly or indirectly from Robe Menzel Road	70%	70% ≤ 1 miles 50% ≤ 3 miles 25% > 3 miles
CO-GF-4	Parcels taking access directly or indirectly from Jordan Road or Engebretson Road	70%	70% ≤ 2 miles 50% > 2 miles
CO-GF-5	Parcels taking access directly or indirectly from Burn Road or 100th ST NE	20%	30%
CO-GF-6	Parcels taking access directly or indirectly from 84th ST NE	2%	10%
CO-GF-7	Parcels taking access directly or indirectly from 163rd AV NE	2%	10%
CO-GF-8	Parcels taking access directly or indirectly from SR-92	2%	10%

*Note: Defines traffic sheds in terms of major arterials. In each case, the traffic shed includes all of the parcels of property that obtain access either directly or indirectly from the major arterial. If a parcel is located in such a spot as to be able to access more than one of the major arterials, then the traffic shed for that parcel will be determined by a trip distribution which will show which major arterial will be used by the majority of the vehicles accessing the parcel.

Distances measured from closest City limit boundary.

3. Passenger Car Equivalents PCEs (#7 above) _____

4. Impact Fee Rate for Single Family Rate (SFR) $_____

(Note: Consistent with the ILA, developments pay the rate in effect at the time of their submittal. As of 2003 the rates were $2,500 per SFR. Through ordinance, the City Council can change these rates at any time, so consult with the City to find the latest fee rates.)

5. Calculation of Proportionate Share Impact Mitigation

SFR Rate		PCEs				% of Trips		
$_____	X	_____	÷	9.57	X	_____	=	$_____
#4 above		#3 above		ADT per SFR		#1 or 2 above		Mitigation payment

2(b) Determining whether or not an additional traffic study is necessary

Will the development generate more than 10 peak-hour trips *or* are there other impacts that need to be addressed (e.g., level of service, safety, or access and circulation)

_____ No. Skip section three and go to section four.

_____ Yes. Read the introduction to section three and skip to section 3(b).

Section Three (3) Traffic Study Requirements

Introduction: This section outlines requirements for traffic studies for impacts on City streets. If an applicant chooses (or is required) to complete a traffic study, then it should be submitted along with this worksheet and a mitigation offer. (Note on Author's Qualifications: A traffic study under this section must be conducted by an engineer licensed to practice in the state of Washington with special training and experience in traffic engineering and, preferably, membership in the institute of transportation engineers. For individuals/firms not on the County's approved list, the developer will provide, with the traffic study, the credentials of the individual or firm performing the traffic study certifying compliance with these qualifications.)

3(a) Proportionate share impact mitigation based on comprehensive impact analysis:

General Requirements for Traffic Studies to Determine Proportionate Share Obligations of The following describes a general outline for use in the preparation of traffic impact analyses for the City of Granite Falls. This outline is not intended to be all inclusive nor will all items be applicable for all types of development. The City of Granite Falls reserves the right to request additional information for unique or unusual developments.

1) INTRODUCTION/PROJECT DESCRIPTION

   Elements to be included as part of narrative or as figure(s).
   - Project name and proponent - Location of project
   - Vicinity map
   - Proposed uses, if known (e.g., names of stores)
   - Project magnitude (square footage, number of units, etc.)
   - Access locations
   - Current and proposed zoning
   - Description of current use of property
   - Copy of site plan
   - Roadways/intersections to be impacted and reviewed in the analysis
   - Horizon year of project (completion and occupancy); state phasing and time-frame if applicable
   - Parking (if applicable)

2) INVENTORY OF EXISTING CONDITIONS
   - Elements to be included as part of narrative or as figure(s).
   - Description of impacted streets in the area (number of lanes, width, pedestrian facilities, speed limit, lighting, etc.)
   - Daily traffic volumes (if available), or estimated from peak hour counts
   - Noon and PM Peak hour counts (as appropriate)
   - Accident history (when required by the City)
   - CapaCity analyses at critical intersections
   - Transit service

3) DEVELOPMENT IMPACTS

   Elements to be included as part of narrative or as figure(s).
   - Trip generation
   - Trip distribution/assignment
   - CapaCity analyses (with and without the project) at critical locations for the horizon year
   - Projected daily traffic volumes and peak hour volumes (with and without the project) for the horizon year and describing the characteristics of the traffic volumes (i.e., passenger vehicles, trucks, truck/trailer combinations, hours of operations, etc.).
   - Need for turn storage lanes at access(es) (if appropriate)
   - Other concerns (if applicable, such as cut-through traffic in residential areas)

4) CONCLUSIONS/RECOMMENDATIONS

   Brief summary of above analyses with recommendations

5) MITIGATION

   Mitigation shall be in accordance with Granite Falls Municipal Code, Granite Falls Comprehensive Plan, State Law and interlocal agreements.

6) OTHER

   Unusual developments may require analysis of off- peak hours, the AM peak hour, weekends, or ability to serve large trucks, for example, if deemed necessary by the City of Granite Falls. Studies performed as part of an EIS document may also require additional analysis.

3(b) Trip Generation and AM and PM Peak Hour Trip Distribution and Assignment

Calculate AM, PM and Daily trip generation consistent with the ITE Trip Generation Handbook and the Snohomish County Public Works Rules. Determine the trip distribution and assignments consistent with the County's document titled "Format for Trip Distributions"(available at the County web site, see below).

- The distributions will be carried out to each key intersection in the City at which the approach or departure volumes on any leg have three (3) or more peak hour trips. Trips should be distributed onto the street system as it is expected to be in six years.

- The distribution should be a schematic map showing the broad distributions of trips in terms of percentages on different streets. Show all County boundaries.
- The assignment should be a schematic map with the impacted key intersections identified and turning movements for each shown in separate diagrams on the same page or on different pages. The assignment should also be presented in tabular form listing each intersection and the number of trips at each movement.

3(c) Additional Analysis

The City may request mitigation for impacts on the level of service of City streets, documented safety locations, frontage improvements and access or circulation. The traffic study requirements below are intended to disclose impacts. Based on this information the City may request through the County that the applicant provide additional information showing possible mitigation measures. If any off-site improvements are needed for mitigation the CityCity would work with the applicant to determine requirements for right-of-way, construction plans, right-of-way use permits, construction/maintenance bonds, and other issues.

Impacts on Level of Service (LOS) of City Intersections for Developments Adding More Than 100 trips per day to City Streets

Contact City of Granite Falls Public Works for the most current list of intersections with failing level of service. Identify any of these intersections impacted by three or more directional peak-hour trips.

Impacts on Documented Safety Problem Locations

Contact the City of Granite Falls Public Works for a list of current locations with documented safety problems. Identify any of these locations impacted by thirty or more daily trips. Note: unlike LOS impacts in which at least three or more peak hour trips have to be added in one direction to require disclosure (e.g., 3 westbound), for documented safety problems, any thirty daily trips added to a documented safety problems location is considered an impact for which disclosure is necessary. (e.g., 20 westbound plus 10 eastbound).

Impacts on Access or Circulation

The City may request improvements to existing streets to provide safe and efficient access and/or circulation. In some instances, the City might request provisions for future City streets identified in the Comprehensive Plan or in the City's adopted map of conceptual linkages and approximate corridors (See Exhibit 3 of the ILA). If so, the City will request specific additional information through the County.

Frontage Improvements, Right of Way, and Access Point Requirements

Any County development which takes access from a City street or fronts on the right-of-way of the City may also be required to provide frontage improvements, dedicate or deed right-of-way, and meet access-point requirements consistent with City standards. If this may be the case, provide appropriate analysis and documentation to enable a determination by the City and the County as to what standards and requirements to apply.

Section Four (4) Traffic Mitigation Offer to the City of Granite Falls

The applicant should complete a traffic mitigation offer to the City of Granite Falls that summarizes the mitigation identified in the City traffic worksheet and any additional traffic study. This will facilitate timely review of the development and processing of the application. The form to use for the mitigation offer is titled "Traffic Mitigation Offer to a City by a Development in the Unincorporated County." This form is typically provided to all applicants along with this traffic study checklist. In addition, copies are available from the City contacts or the County web site shown below.

City Contact Gerry James, City Clerk, City of Granite Falls , 206 South Granite Ave, Granite Falls, WA 98252, (360) 691-6441

Additional Information

County Web Site

Snohomish County Public Works has a web site with many of the documents related to traffic studies and mitigation requirements for developers. From the Snohomish County home page go to:

Departments/Public Works/Divisions/TES/ProgramPlanning/3066B

PERFORMANCE BOND

Granite Falls Subdivision/
Plat/Permit No: _____
Project Address _____

Owner/Developer/
Contractor ("Principal"): _____
Principal Address: _____
Project Name: _____

WHEREAS, _____, hereinafter referred to as "the Principal," has applied to the City of Granite Falls, hereinafter referred to as "the City," to construct the project known as _____ on a site located at _____, within the City of Granite Falls, and;

WHEREAS, the City approved the requested action on_____, and;

WHEREAS, the approval granted by the City and the provisions of the Granite Falls Municipal Code require certain improvements to be made in connection with construction of the project, the improvements are shown on the approved site plan and/or other required plans and as further defined by the conditions identified in the City file,

NOW, THEREFORE, the undersigned PRINCIPAL and the bonding company, _____, a corporation authorized to transact surety business in the State of Washington, hereinafter referred to as "the Surety," agree and bind themselves, their heirs, executors, _____, ($_____), lawful money of the United States, according to the following terms and conditions:

1. Completion of Improvements. If the Principal does not complete all improvements required by the above-referenced conditions, plans, and file within _____ weeks/months, then the Surety shall, upon the demand of the City, remit to the city within ten (10) days of receipt of said demand, the amount of this Bond or such lesser amount as may be specific in the demand.

If any improvements are in the City right-of-way, then the Principal will replace and restore such roadway, street, alley, avenue, or other public place to as good as state or condition as at the time of the commencement of said work, and maintain the same in good order, to the satisfaction of the City of Granite Falls Engineering Department or City Engineer, and will comply with all the provisions of any permit and all resolutions or instruments related thereto.

2. Repairs by the City. In the event the Principal fails to complete all of the above-referenced improvements within the time specified by the City, its employees and agents shall have the right, at their sole election, to enter onto said property described above for the purpose of completing the improvements. This provision shall not be construed as creating an obligation on the part of the City or its representatives to complete such improvements. The Principal and Surety agree to reimburse the City for all costs to the City, plus an additional sum equal to fifteen percent (15%) of the City's cost for administrative and enforcement expense.

3. Attorney's Fees. In the event any lawsuit is instituted by the City of Granite Falls, the Principal or the Surety to enforce the terms of this Bond or to determine the rights of any party hereunder, the prevailing party in such litigation shall be entitled to recover from the losing party its cost, including reasonable attorney's fees, incurred as a result of such lawsuit.

4. Release of Bond. This Bond shall remain in full force and effect until the obligations secured hereby have been fully performed and a bond guaranteeing maintenance of all improvements for a period of two (2) years from acceptance has been submitted to the City in an amount of not less than 15 percent (15%) of the cost of the improvements and in a form suitable to the City, and until released in writing by the City at the request of the Surety or the Principal upon expiration of the period specified in paragraph 1 above.

Dated this _____ day of _____, 20____.

_____	_____
Bonding Company	Developer/Owner/Phone #
_____	
Officer/Title	
_____	_____
_____	Accepted by the City of Granite Falls
Address/Phone	Dated:_____

ASSIGNMENT OF FUNDS
IN LIEU OF PERFORMANCE BOND

STATE OF WASHINGTON)
) ss.
COUNTY OF SNOHOMISH)

WE HEREBY AGREE that the sum of $_____ will be held in account number _____ in the name of _____ to assure performance requirements hereunder.

NOW, THEREFORE, the conditions of these obligations are such that the principal will construct all improvements in full compliance with all the requirements of the City of Granite Falls for the project of _____, as listed below:

	PROJECT ELEMENT	VALUE
1.	_____	_____
2.	_____	_____
3.	_____	_____
4.	_____	_____
5.	_____	_____
6.	_____	_____

The above-listed project elements are to be completed within one year from the date of assignment of funds approval, or as later may be amended and evidences by a letter of amendment for the City of Granite Falls. This letter shall remain in force and effect until such time as the project elements have been completed and funds released by letter from the City of Granite Falls.

WE FURTHER AGREE that up to the full assigned amount shall be released to the City of Granite Falls upon written demand by_____ of the City of Granite Falls. The amount demanded by the _____ or designee will be a good faith estimate of the actual cost of the repairs or improvements.

WE FURTHER AGREE that if it is necessary for the City of Granite Falls to take any legal action against any signatory to the Agreement to assure the proper completion of this project, the City of Granite Falls will be entitled to reasonable costs and attorney's fees.

It shall be the responsibility of both the Principal and Surety to inform the City of Granite Falls if they change addresses. Change of address should be mailed to the City of Granite Falls, P.O. Box 1440, Granite Falls, WA 98252. The City will mail only to the last known address of Principal and Surety.

DATED this _____ day of _____, 20_____.

_____	_____
Principal	Name of Financial Institution
_____	_____
Address	Address
_____	_____
City, State and Zip Code	City, State and Zip Code

ASSIGNMENT OF FUNDS

Plat:
Requested By:
Date of Request:

ITEM	QTY	UNIT	PRICE PER UNIT	TOTAL	% COMPLETE	RELEASE AMOUNT

SUBTOTAL **$**_____ **$**_____
TAX **$**_____ **$**_____
TOTAL OF WORK **$**_____ **$**_____

Department:_____
Authorize to Release:_____

MAINTENANCE BOND

Granite Falls Subdivision/
Plat/Permit No: _____
Project Address _____

Owner/Developer/
Contractor ("Principal"): _____
Principal Address: _____
Project Name: _____

WHEREAS, _____, hereinafter referred to as "the Principal," has applied to the City of Granite Falls, hereinafter referred to as "the City," to construct the project known as _____ on a site located at _____, within the City of Granite Falls, and;

WHEREAS, the City approved the requested action on_____, and;

WHEREAS, the approval granted by the City and the provisions of the Granite Falls Municipal Code require certain improvements to be made in connection with construction of the project, the improvements are shown on the approved site plan and/or other required plans and as further defined by the conditions identified in the City file,

WHEREAS, a further condition is that the Principal will maintain and repair the improvements in said project for a period of _____ months from their final acceptance by the City.

NOW, THEREFORE, the undersigned PRINCIPAL and the bonding company,

_____, a corporation authorized to transact surety business in the State of Washington, hereinafter referred to as "the Surety," agree and bind themselves, their heirs, executors, _____, ($_____), lawful money of the United States, according to the following terms and conditions:

1. Failure to Repair and Maintain. If the Principal does not repair and maintain all improvements required by the above-referenced conditions, plans, and file within _____ months, then the Surety shall, upon the demand of the City, remit to the City within ten (10) days of receipt of said demand, the amount of this Bond or such lesser amount as may be specific in the demand.

2. Repairs by the City. In the event the Principal fails to make any repairs or maintenance on the improvements within the time specified by the City (generally after fourteen (14) days notice, or less, if the City determines and emergency exists), its

employees and agents shall have the right, at their sole election, to enter onto said property described above for the purpose of making repairs or maintenance. This provision shall not be construed as creating an obligation on the part of the City or its representatives to repair and maintain such improvements. The Principal and Surety agree to reimburse the City for all costs to the City, plus an additional sum equal to fifteen percent (15%) of the City's cost for administrative and enforcement expense.

3. Attorney's Fees. In the event any lawsuit is instituted by the City of Granite Falls, the Principal or the Surety to enforce the terms of this Bond or to determine the rights of any party hereunder, the prevailing party in such litigation shall be entitled to recover from the losing party its cost, including reasonable attorney's fees, incurred as a result of such lawsuit.

4. Release of Bond. This Bond shall remain in full force and effect until the obligations secured hereby have been fully performed, and until release in writing by the City at the request of the Surety of the Principal upon expiration of the period specified in paragraph 1 above.

Dated this _____ day of _____, 20____.

_____	_____
Bonding Company	Developer/Owner/Phone #
_____	
Officer/Title	
_____	_____
_____	Accepted by the City of Granite Falls
Address/Phone	Dated:_____

SURETY ACKNOWLEDGEMENT

STATE OF WASHINGTON)
) ss.
County of Snohomish)

On this _____ day of _____, _____, before me, the undersigned, a Notary Public in and for the State of Washington, duly commissioned and sworn, personally appeared _____, to me known to be the _____, of _____, the corporation that executed the foregoing instrument, and acknowledged the said instrument to be the free and voluntary act and deed to said corporation, for the uses and purposes therein mentioned, and on oath states that _____ was authorized to execute said instrument and that the seal affixed is the corporate seal of said corporation.

_____
NOTARY PUBLIC in and for the State of Washington
My Commission Expires:_____

DEVELOPER/OWNER

STATE OF WASHINGTON)
) ss.
County of Snohomish)

On this _____ day of _____, _____, before me, the undersigned, a Notary Public in and for the State of Washington, duly commissioned and sworn, personally appeared _____, to me known to be the _____, of _____, the corporation that executed the foregoing instrument, and acknowledged the said instrument to be the free and voluntary act and deed to said corporation, for the uses and purposes therein mentioned, and on oath states that _____ was authorized to execute said instrument and that the seal affixed is the corporate seal of said corporation.

_____
NOTARY PUBLIC in and for the State of Washington
My Commission Expires:_____

CORPORATE ACKNOWLEDGEMENT

STATE OF WASHINGTON)
) ss.
County of Snohomish)

On this _____ day of _____, _____, before me, the undersigned, a Notary Public in and for the State of Washington, duly commissioned and sworn, personally appeared _____, to me known to be the _____, of _____, the corporation that executed the foregoing instrument, and acknowledged the said instrument to be the free and voluntary act and deed to said corporation, for the uses and purposes therein mentioned, and on oath states that _____ was authorized to execute said instrument and that the seal affixed is the corporate seal of said corporation.

_____
NOTARY PUBLIC in and for the State of Washington
Printed Name:_____
Residing At:_____
My Commission Expires:_____

CITY OF GRANITE FALLS
ASSIGNMENT OF FUNDS
IN LIEU OF MAINTENANCE BOND

Project Name/Permit No.: _____

Developer/Principal: _____

In lieu of a maintenance bond, we hereby agree that the sum of $_____ will be held in savings account number _____ in _____ in the name of _____ to assure maintenance requirements hereunder.

Now, therefore, the conditions of these obligations are such, that the principal shall replace or correct any part or parts of all improvements, installed under Plans approved by the City of Granite Falls _____ day of _____, _____ discovered by the City of Granite Falls to be defective in material or inefficient or otherwise unsatisfactory in operations, through faulty construction, materials or workmanship, or through any fault of design or detail arising with Contractor or manufacturer within two years of the acceptance of the work (date) and transfer of title. Such parts shall be replaced with parts constructed in accordance with designs and of material satisfactory to the City.

We further agree that up to the full amount of the funds in the above referenced account shall be released to the City of Granite Falls upon written demand by the Mayor of the City. The amount demanded by the Mayor will be a good faith estimate of the actual cost of the repairs.

We further agree that if it is necessary for the City of Granite Falls take any legal action against any signatory to this agreement to assure compliance with its terms, the City shall be entitled to its reasonable costs and attorney's fees.

It shall be the responsibility of both the principal and the financial institution to inform the City of Granite Falls, in writing, of any change of mailing address. The City will mail only to the last known address of principal and financial institution.

Signed this _____ day of _____, 20____.

_____	_____
Principal	Name of Financial Institution
_____	_____
Address	Address
_____	_____
City, State, Zip	City, State, Zip
Phone No. _____	Phone No. _____

_____	_____
Signature of Principal	Signature of Bank Official
_____	_____
Print Name and Title	Print Name and Title

STATE OF WASHINGTON:)
) ss.
COUNTY OF SNOHOMISH:)

I Certify that I know or have satisfactory evidence that _____ is the person who appeared before me, and said person acknowledged that he/she signed this instrument, on oath stated that he/she was authorized to execute the instrument and acknowledgment it as the officer of _____ to be the free and voluntary act of such party for the uses and purposes mentioned in the instrument.

Dated: _____
(seal or stamp)

_____
Notary Public (Title) in and for the State of Washington,
Residing at _____

_____
Print Name
My appointment expires: _____

EASEMENT FOR UTILITIES

THIS EASEMENT is made on the _____ day of _____, _____ ("Effective Date") by _____, a Washington corporation ("Grantor").

1. Grant and Location of Easement. Grantor hereby grants and conveys to the City of Granite Falls, a municipal corporation ("Grantee"), its successors and assigns, a non-exclusive utility easement ("Easement") with immediate right of entry and continued access over, under, and across the real property legally described on Exhibit A.

2. Purpose of Easement. The purpose of this Easement is for the construction, improvement, maintenance, and repair of underground utilities, including but not limited to an underground water, storm drainage, and sanitary sewer pipes, and other appurtenant structures.

3. Maintenance of Easement. Grantee shall maintain and repair the utility pipes, water mains, and its appurtenant structures so as not to damage the property burdened by this Easement, or any other property.

4. Interference. Grantor may use the surface above the Easement, PROVIDED that its use does not interfere with or cause damage to the utility pipes, water mains, and appurtenant structures, PROVIDED FURTHER that prior to constructing any building or planting any trees within the Easement Grantor shall obtain the written consent of Grantee, which consent shall not be unreasonably withheld. Grantor may construct a fence or other obstruction on Grantor's property, PROVIDED however that Grantor does not prohibit or impede Grantee's access to the Easement. Grantor may grant other non-exclusive easement rights in and to the Easement; PROVIDED, however, that no other utility pipe, line, or structure shall be located closer than five (5) feet parallel to the Grantee's utility pipe, water main, and/or appurtenances; and, PROVIDED FURTHER, that prior to installation of any utility pipe, line, or structure that crosses the Easement, Grantor shall obtain the written consent of Grantee, which consent shall not be unreasonably withheld. If, in exercising any right to use the surface above the Easement or grant other easements, the Easement is disturbed, Grantor shall return the Easement to its condition prior to its disruption, at Grantor's sole cost and expense.

5. Title. The Grantor warrants that the Grantor has good title to the above property.

6. Successor and Assigns. This agreement shall run with the property and be binding on the parties, their successors, and assigns.

_____
A Washington corporation

By: _____
Its: _____

STATE OF WASHINGTON)
): ss.
County of Snohomish)

On this day personally appeared before me _____ to me known to be the person who executed the within instrument as the _____ of _____, the corporation that executed the within and foregoing instrument, and acknowledged the said instrument to be the free and voluntary act and deed of said corporation, for the uses and purposes therein mentioned, and on oath stated that he/she is authorized to execute the said instrument and that the seal affixed in the corporate seal of said corporation.

GIVEN under my hand and official seal this _____ day of _____, _____.

_____
_____
(Type/Print Name)
Notary Public in and for the State of Washington,
residing at _____.
My appointment expires: _____.

CITY OF GRANITE FALLS, SNOHOMISH COUNTY

BILL OF SALE

KNOW ALL BY THESE PRESENTS that for and in consideration of the sum of One Dollar ($1.00) and other good and sufficient consideration, receipt whereof is hereby acknowledged, the undersigned grantor(s) _____ do(es) by these presents hereby convey, set over, assign, transfer and sell to the City of Granite Falls, Snohomish County, Washington, a municipal corporation, the following described water/sanitary/storm or roadway system and all appurtenances thereto, situated in the City of Granite Falls, Snohomish County, Washington:

DESCRIPTION	ALONG	FROM	TO	SIZE	LENGTH

the said grantor(s) hereby warrants that he, they, it, is/are the sole owner(s) of all the property above described; that they have full power to convey all rights herein conveyed and agree to hold the City of Granite Falls harmless from any and all claims which might result from execution of this document.

IN WITNESS WHEREOF the grantor(s) has/have executed these presents this _____ day of _____, 2000.

STATE OF WASHINGTON)
) ss.
SNOHOMISH COUNTY)

On this _____ day of _____, 2000, before me the undersigned Notary Public personally appeared _____, to me known to be the individual(s) who executed the within and foregoing instrument and acknowledged that___ he___ signed and sealed the same as _____ free and voluntary act and deed, for the uses and purposes therein mentioned.

GIVEN under my hand and official seal the day and year in this certificate above written.

_____
Notary Public in and for the State of Washington

Residing at _____

_____

SAMPLE COPY

AFFIDAVIT OF NO LIENS

STATE OF WASHINGTON)
) ss
COUNTY OF SNOHOMISH)

Re: _____

The undersigned, being first duly sworn upon oath, depose and say:

I am the developer of a road and/or utility systems, or additions thereto, for the above-referenced project, and hereby certify as follows:

1. That there are no liens against or which may be filed against said project.

2. That all debts, labor bills, and the state sales taxes have been paid in connection with the above-referenced project.

_____
By:_____

SUBSCRIBED AND SWORN to before me this ___ day of _____, 2000.

_____
Notary Public in and for the State of
Washington, residing at

(Notary Seal)

CITY OF GRANITE FALLS
AGREEMENT FOR INSPECTION AND MAINTENANCE OF PRIVATELY MAINTAINED STORM DRAINAGE FACILITIES

Declaration of Covenant

In consideration of approval of the development known as _____, relating to real property legally described as follows:

The undersigned, as owner(s), covenant and agree that:

1. The owner and subsequent owners of the above described property shall maintain the approved storm drainage system shown on the City approved construction plans or City approved changes thereto in compliance with the Operation and Maintenance Standards in Volume 4 of the 2005 WDOE Stormwater Management Manual for Western Washington.

2. The owner shall, maintain an Operation and Maintenance Schedule, record showing maintenance performed. The Operation and Maintenance records shall be retained by the Owner for a minimum of three years and shall be available to the City for inspection at all reasonable times.

3. The owner shall provide access to the storm drainage system at reasonable times for regular inspection by the City or its authorized representative to ensure that the facility is maintained in proper working condition in accordance with the Operation and Maintenance Schedule.

4. If at any time, in accordance with the Operations and Maintenance Schedule, the City of Granite Falls reasonably determines that maintenance or repair work is required to be done to the existing, approved storm drainage facilities installed on the property the City shall give the current owner 30-days notice that the City intends to perform such maintenance or repairs, or to have them performed by others.

5. If the owner has not completed or is not diligently pursuing the repair or maintenance of the system and it becomes necessary for the City of Granite Falls to perform the work, the current owners will assume responsibility for the cost of such maintenance or repair and will reimburse the City within thirty days of the receipt of the invoice. Overdue payments will require payment of interest at the current legal rate for liquidated judgments, and any costs or fees incurred by the City, should any legal action be required to collect such payments, will be borne by the parties responsible for said reimbursements.

6. If at any time the City of Granite Falls reasonably determines that the existing and approved storm drainage system on the property poses a hazard to life and limb, endangers property, or adversely affects the safety and operations of a public way, due to failure, damage or non-maintenance of the existing on-site storm system, and that the situation is so adverse as to preclude written notice to said owners, the City may take the measures necessary to eliminate the hazardous situation (which will mean repair or clean out of the existing system only to the same standards as originally installed and approved) provided the City has first made a reasonable effort to locate said owner before acting.

   The current owners will assume responsibility for the cost of such maintenance or repair; and will reimburse the City within thirty days of receipt of the invoice. Overdue payments will require payment of interest at the current legal rate for liquidated judgments, and any costs or fees incurred by the City, should any be borne by the parties responsible for said reimbursements.

7. The owner shall keep the City of Granite Falls informed at all times as to the name, address and telephone number of the contact person responsible for the performance of maintenance or repair work to the storm drainage facilities.

   These covenants are intended to protect the value and desirability of the real property described above, and to benefit all the citizens of the City of Granite Falls. They shall run with the land and be binding on all parties having or acquiring from the current owners or their successors, any right, title or interest therein, and to the benefit of all the citizens of the City of Granite Falls.

8. Lien: The City shall have a lien for costs expended by it for any repairs or maintenance properly chargeable to the owner hereunder, which lien shall be prior in right to the lien of secured parties under deeds of trust, mortgages or real estate contracts, regardless of the date of their recordation, and which shall be recordable and enforceable in the manner provided for materialmens' contractors' liens pursuant to RCW Ch. 60.04 or any successor statute thereto.

9. Attorneys' fees and costs: Should any party institute proceedings to enforce any right hereunder, including filing a lien under paragraph 8, reasonable costs and attorneys' fees thereby incurred shall be awarded to the prevailing party in such proceeding.

_____	_____
City of Granite Falls, Mayor (Signature)	Owner (Signature)
_____	_____
City of Granite Falls, Mayor (Print)	Owner (Print)
_____	_____
Date	Address
	_____
	City, State, Zip
	Phone:_____
	Date:_____

STATE OF WASHINGTON

ss. (INDIVIDUAL ACKNOWLEDGMENT)

County of _____

I, _____ , Notary Public in and for the State of Washington, residing at _____ , do hereby certify that on this _____ day of _____ , 20___, personally appeared before me _____ to be known to be the individual described in and who executed the within instrument and acknowledged that _____ signed and sealed the same as _____ free and voluntary act and deed for the uses and purposes herein mentioned.

GIVEN UNDER MY HAND AND OFFICIAL SEAL
this ____ day of _____, 20___.

_____
Notary Public in and for the State of Washington, residing at
_____ in said County. My commission expires
_____ .

LIST OF MISCELLANEOUS DETAILS

TITLE OF DRAWING

Miscellaneous Roadway Details:

Major Arterial Section
Minor Arterial Section
Collector Street Section
Local Access Street Section
Alley Section
Trench Pavement Restoration Detail
Poured Monument in Place Detail
Surface Monument Detail
Sight Obstruction Detail
Sight Distance Continued Detail (2 pages)
Sidewalk without Planting Strip Detail
Sidewalk with Planting Strip Detail
Cement Concrete Driveway without Planter Detail
Cement Concrete Driveway with Planter Detail
Curb Ramp and Texture Detail (2 pages)
Concrete Curb and Gutter Detail
Turn Arrow Details
Pavement Marking Details
Parking Space Marking Details
Mailbox (Placement) Detail
Rock Wall Detail
Manhole or Catch Basin (Type II), Grade Adjustment Detail
Valve Box Detail
Speed Hump; Design, Pavement Marking and Signing
Alternative Fire Apparatus Access Turnaround

Miscellaneous Storm Sewer Details:

Storm Drain Pipe Trench Section Detail (Rigid Pipe)
Catch Basin, Type I, Detail
Catch Basin, Type II, Detail (with Flow Restrictor if Applicable)
Catch Basin Frame and Grate Detail
Riprap and Energy Dissipation for Ditch Detail
New Ditch Construction Detail
Manhole or Catch Basin (Type II) Grade Adjustment Detail

Miscellaneous Sanitary Sewer Details:

Typical Precast Manhole Detail
Typical Manhole Plan (View) Detail
Typical Shallow Precast Manhole Detail
Typical Saddle Manhole Detail
Outside Drop Manhole Detail
Inside Drop Manhole Detail
Manhole Frame and Cover Detail

LIST OF MISCELLANEOUS DETAILS

TITLE OF DRAWING

Miscellaneous Sanitary Sewer Details:

Manhole Frame Collar Detail
Polypropylene Ladder and Manhole Steps Detail
Force Main Discharge Manhole Detail
Sanitary Sewer Trench Section for PVC Pipe Detail
Sanitary Sewer Trench Section for DI Pipe Detail
Pressure Line and Force Main Typical Trench Section Detail
Typical Side Sewer Detail (within New Development)
Typical Side Sewer Service (within Existing Right-of-Way)
Standing Side Sewer
Roof Structure for Electrical Enclosure Detail
Air and Vacuum Release Assembly (Sanitary) Detail
Grease Interceptor Detail

Miscellaneous Water System Details:

Water Main Depth Requirement Detail
Water Main Trench Section Detail
Typical Utility Crossing Detail
Concrete Thrust Block
Thrust Block Detail
Thrust Restraint for Ductile Iron Pipe
Anchor Block Detail
Wet Tap Connection Detail
Cut In Connection Detail
Fire Hydrant Installation
Fire Hydrant Installation, Curb, Gutter and Sidewalk
Fire Hydrant Relocation
Fire Hydrant Location (in cut or fill section) Detail
Fire Hydrant Guard Post
1” and smaller Water Service Detail (2 pages)
1-1/2" and 2" Water Service Detail
Meter and Meter Vault Assembly (3" thru 10") Detail (2 pages)
2" Blow-Off Assembly Detail
Permanent End-Line Blow-Off Assembly
Air and Vacuum Release Assembly Detail
Water Sampling Station Detail (2 pages)
Valve Box Adjustment Detail
Double Check Detector Backflow Prevention Assembly

LIST OF MISCELLANEOUS DETAILS

TITLE OF DRAWING

Miscellaneous Water System Details:

Pressure Reducing Station Detail (2 Pages)
Valve Extension Detail
Reduced Pressure Backflow Assembly 3/4" – 2" Detail
Reduced Pressure Backflow Assembly >3" Detail
Individual Double Check Detector Assembly Detail
Fire Line Connection

Miscellaneous Details:

Removable Bollard Detail
Type III Barricade - for Future Extended Roadway
Swing Gate and Fence Detail
Straw Bale Dam Detail
Siltation Silt Fence Detail
Storm Drain Inlet Protection Detail
Street Tree Planting and Staking Detail
Ground Cover Planting Detail
Ball & Burlap Planting Detail
Rooted Cutting/Offset/Seedling Detail
Bare Root/Can Stock Planting Detail

Roadway Details

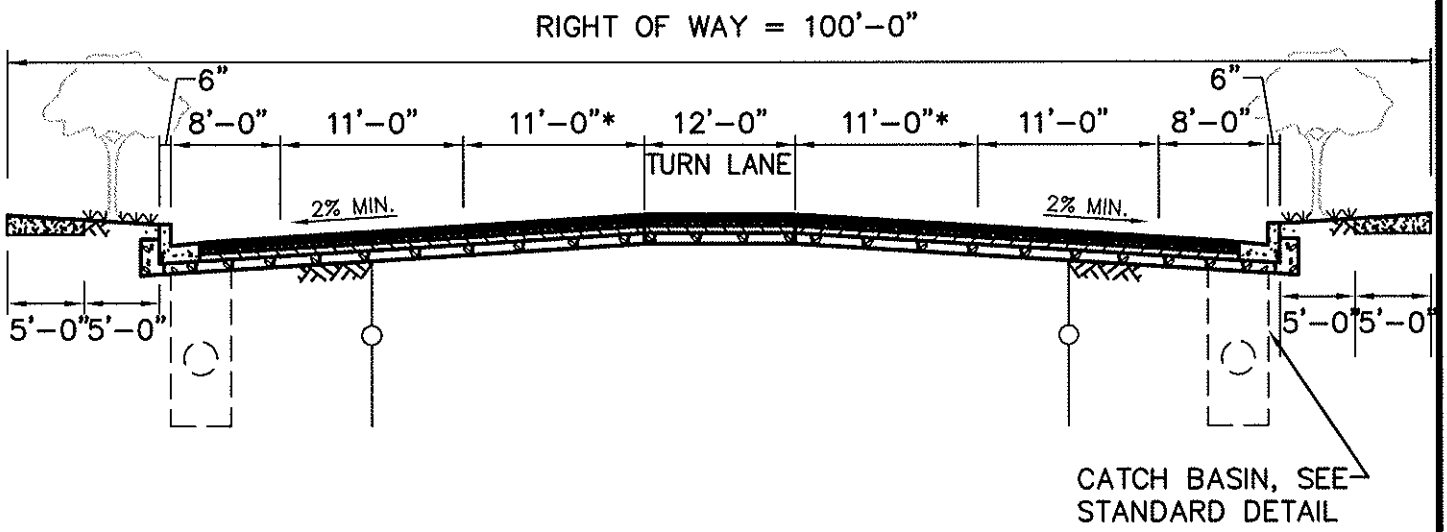

MAJOR ARTERIAL

*NOTE:
2ND TRAVEL LANE CONSTRUCTION AND TURN LANE AS NEEDED BASED UPON TRAFFIC CAPACITY AND SAFETY NEEDS. CITY MAY REQUIRE CENTER VEGETATION STRIP IN SPECIAL CIRCUMSTANCES.

FOR ADDTIONAL REQUIREMENTS SEE SECTION 5.3 OF THE PUBLIC WORKS STANDARDS.

CITY OF GRANITE FALLS			
MAJOR ARTERIAL SECTION			
APPROVED: Warren W. Perkins 4/10/08 BY CITY DATE			DWG. NO. ART-SECT
DATE: 3/2008	DRWN: M.S.	CHKD: W.P.	SCALE: NONE

L:\GRFALLS\00311 STD DETAILS\STANDARDS\ART-SECT.DWG, MAJOR, 3/7/2008 4:36:06 PM, 1:1, BY: PERKLINS W

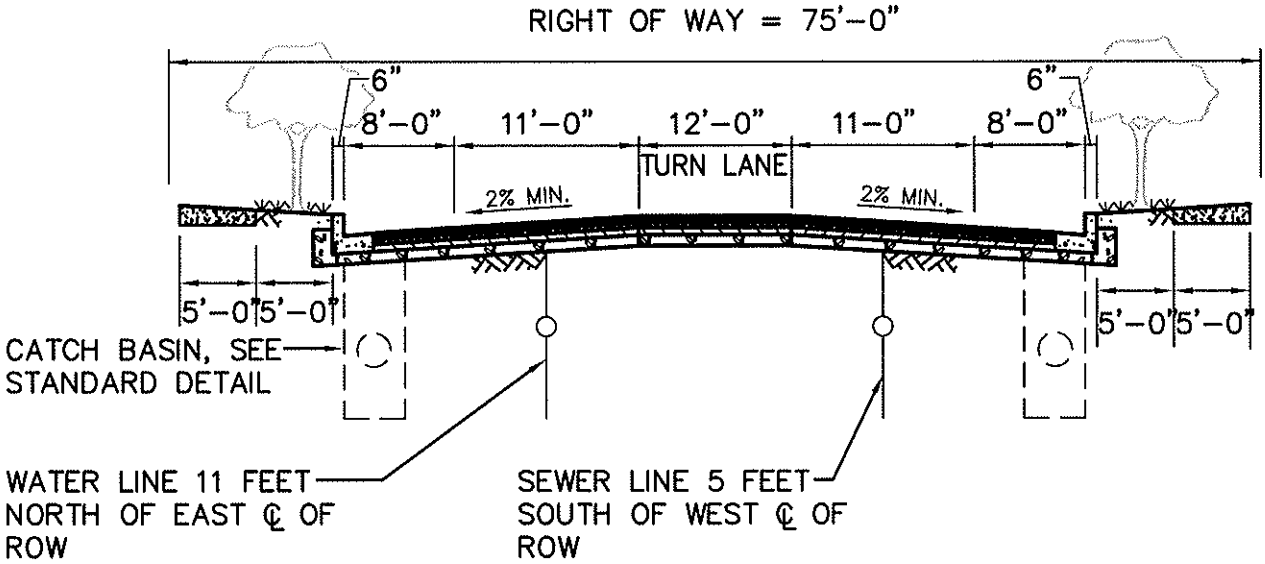

MINOR ARTERIAL

*NOTE:

TURN LANE CONSTRUCTION AS NEEDED BASED UPON TRAFFIC CAPACITY AND SAFETY NEEDS. CITY MAY REQUIRE CENTER VEGETATION STRIP IN SPECIAL CIRCUMSTANCES.

FOR ADDTIONAL REQUIREMENTS SEE SECTION 5.3 OF THE PUBLIC WORKS STANDARDS.

CITY OF GRANITE FALLS			
MINOR ARTERIAL SECTION			
APPROVED: Warren W. Perkins 4/10/08 BY CITY DATE			DWG. NO. ART-SECT
DATE: 3/2008	DRWN: M.S.	CHKD: W.P.	SCALE: NONE

L:\GRFALLS\00311 STD DETAILS\STANDARDS\ART-SECT.DWG, MINOR, 3/7/2008 4:36:37 PM, 1:1, BY: PERKLINS W

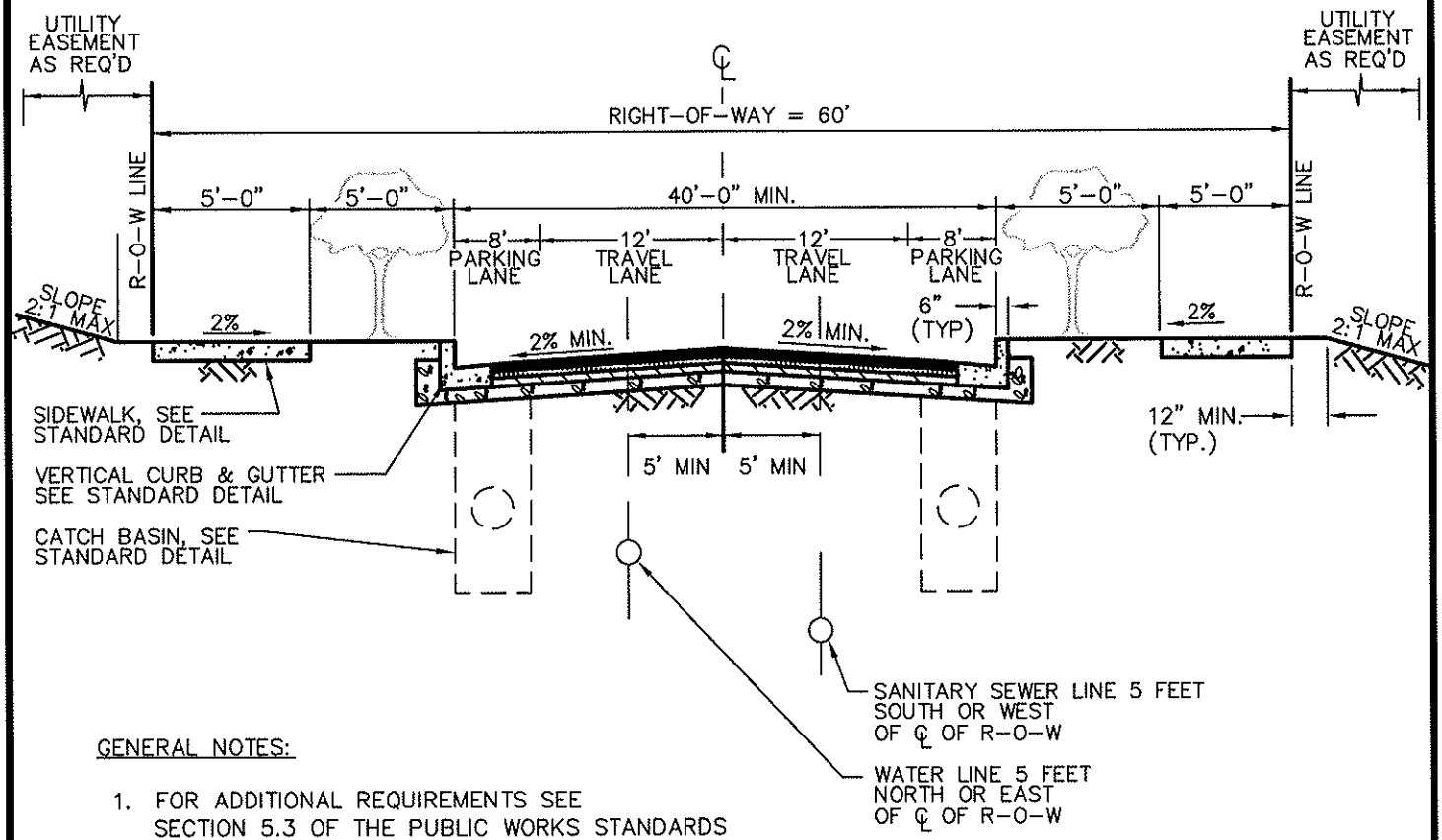

GENERAL NOTES:

1. FOR ADDITIONAL REQUIREMENTS SEE SECTION 5.3 OF THE PUBLIC WORKS STANDARDS

CITY OF GRANITE FALLS			
COLLECTOR STREET			
APPROVED: Warren W. Perkins 4/10/08 BY CITY DATE			DWG. NO. COL-ST
DATE: 3/2008	DRWN: M.S.	CHKD: W.P.	SCALE: NONE

L:\GRFALLS\00311 STD DETAILS\STANDARDS\COL-ST.DWG, LAYOUT1, 3/7/2008 4:38:10 PM, 1:1, BY: PERKLINS W

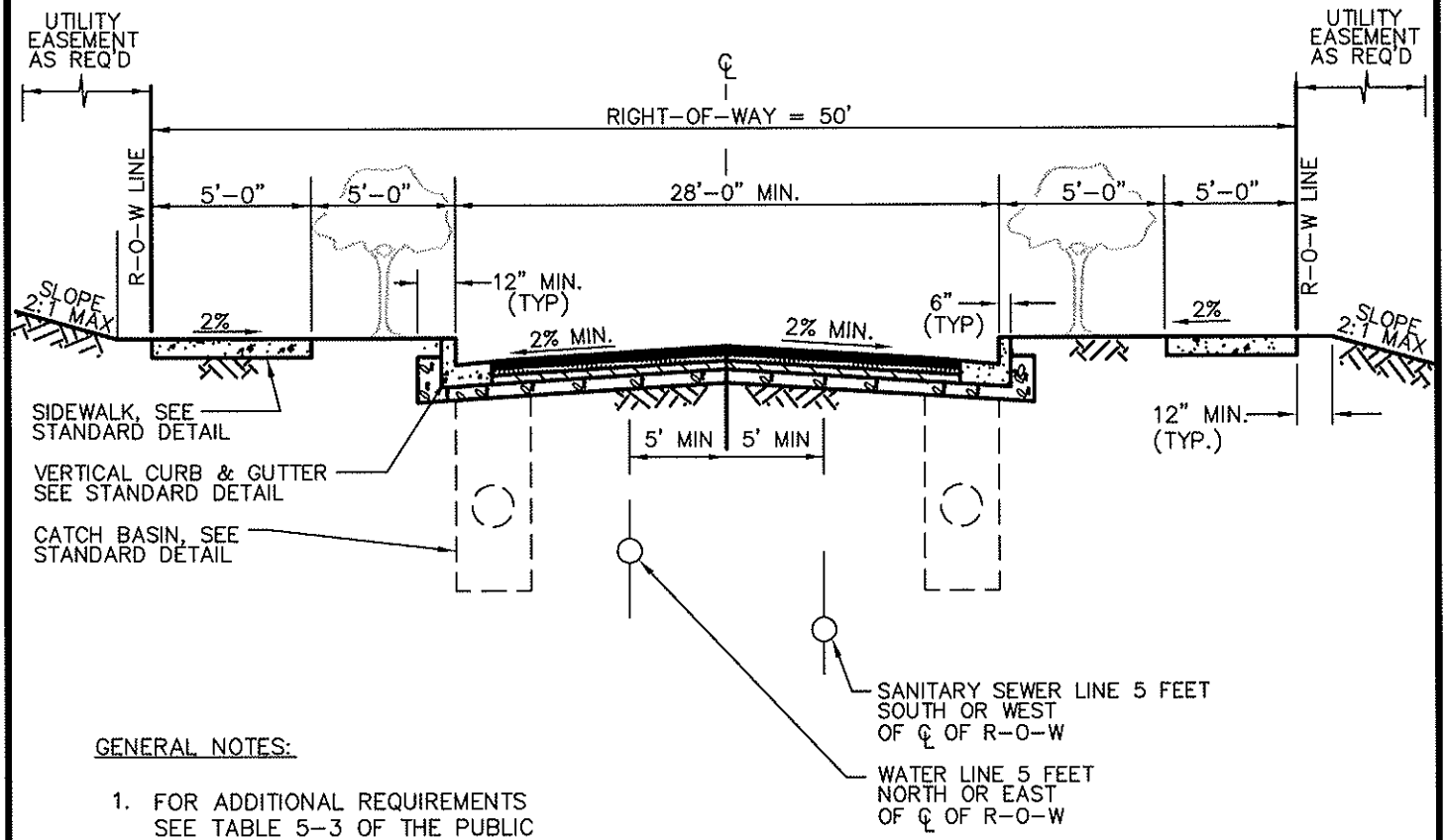

GENERAL NOTES:

1. FOR ADDITIONAL REQUIREMENTS SEE TABLE 5-3 OF THE PUBLIC WORKS STANDARDS.

CITY OF GRANITE FALLS			
LOCAL ACCESS STREET			
APPROVED: Warren W. Perkins 4/10/08 BY CITY DATE			DWG. NO. LO-AC-ST
DATE: 3/2008	DRWN: M.S.	CHKD: W.P.	SCALE: NONE

L:\GRFALLS\0031 STD DETAILS\STANDARDS\LO-AC-ST.DWG, LAYOUT1, 3/7/2008 4:42:30 PM, EI, BY: PERKLINS W

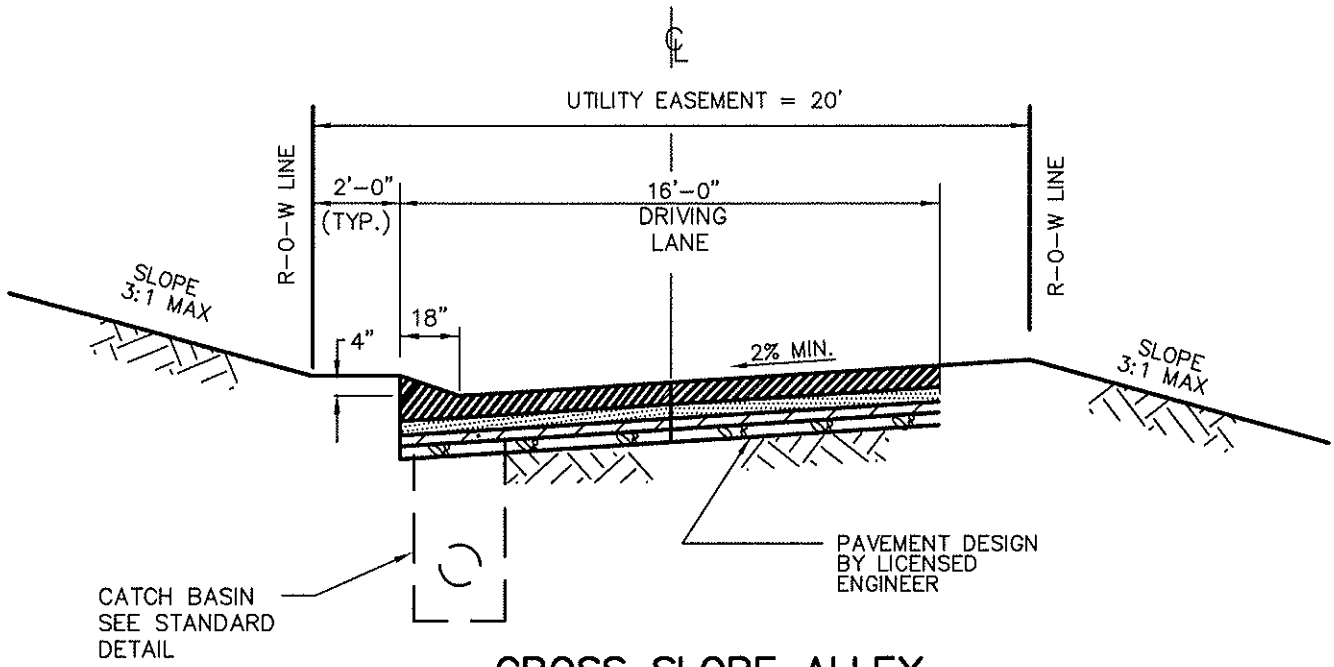

CROSS SLOPE ALLEY

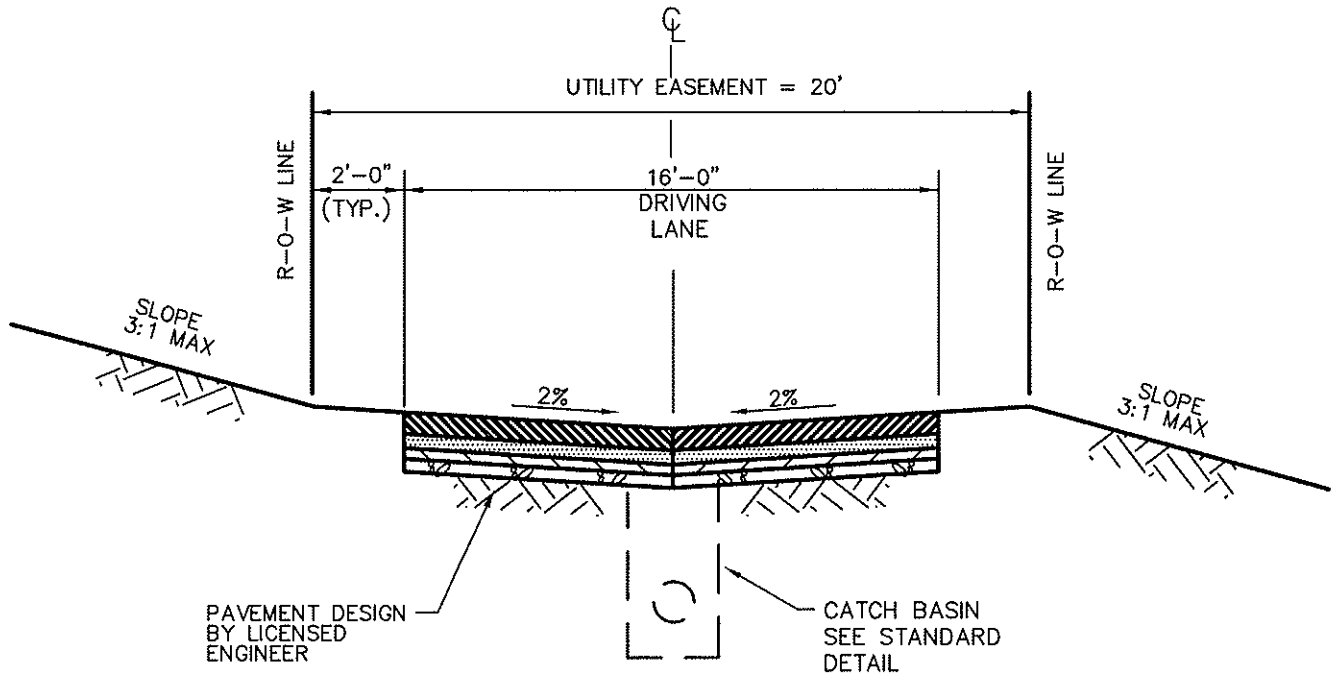

"V" SECTION ALLEY

GENERAL NOTE:

FOR ADDITIONAL REQUIREMENTS SEE TABLE 5-3 OF THE PUBLIC WORKS STANDARDS

CITY OF GRANITE FALLS			
ALEY SECTION			
APPROVED: Warren W. Perkins 4/10/08 BY CITY DATE			DWG. NO. ALE-SECT
DATE: 3/2008	DRWN: M.S.	CHKD: W.P.	SCALE: NONE

L:\GRFALLS\00311 STD DETAILS\STANDARDS\ALE-SECT.DWG, LAYOUT1, 3/7/2008 4:41:34 PM, 1:1, BY: PERKLINS W

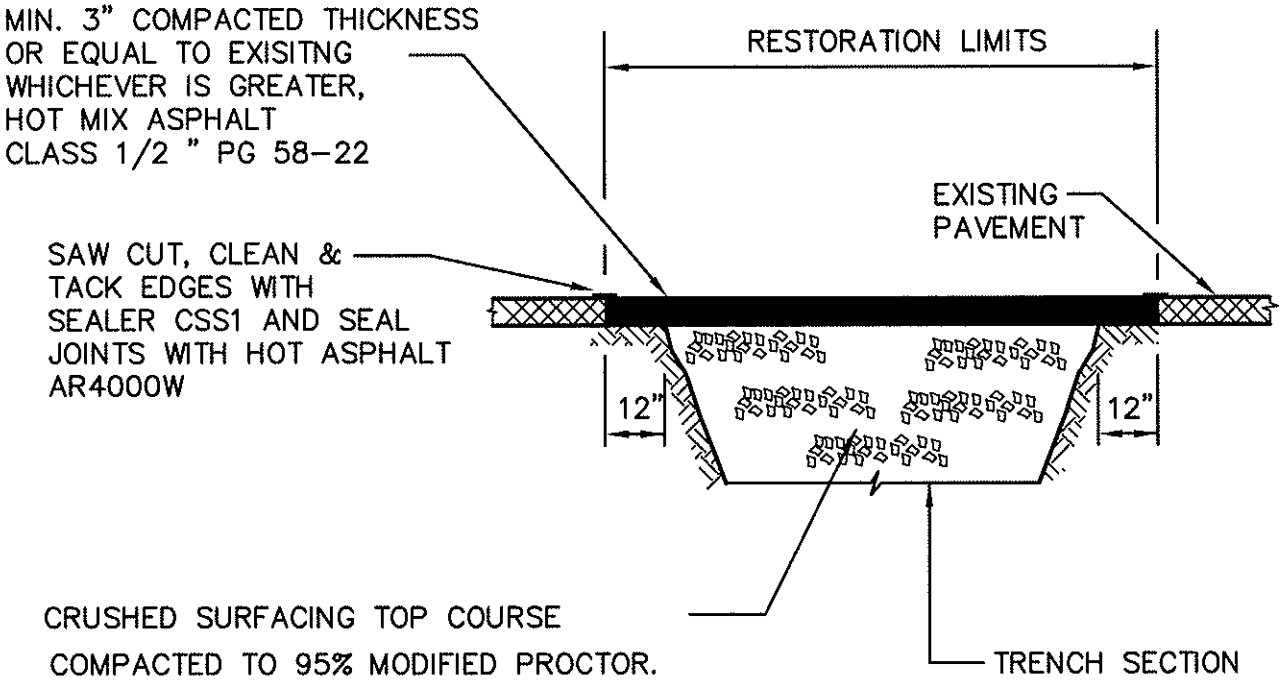

NOTES:

1. WSDOT ROW CONSTRUCTION PERMIT MAY REQUIRE ALTERNATE RESTORATION
2. 100% CRUSHED ROCK BACKFILL OR CDF, AS DIRECTED BY CITY, ON ALL ROADWAY CUTS TRANSVERSE TO ROAD

CITY OF GRANITE FALLS			
ASPHALT PAVEMENT REPAIR			
APPROVED: Warren W. Perkins 4/10/08 BY CITY DATE			DWG. NO. ASPH-REP
DATE: 3/2008	DRWN: M.S.	CHKD: W.P.	SCALE: NONE

L:\GRFALLS\0031I STD DETAILS\STANDARDS\ASPH-REP.DWG, LAYOUT1, 3/7/2008 4:53:50 PM, 1:1, BY: PERKLINS W

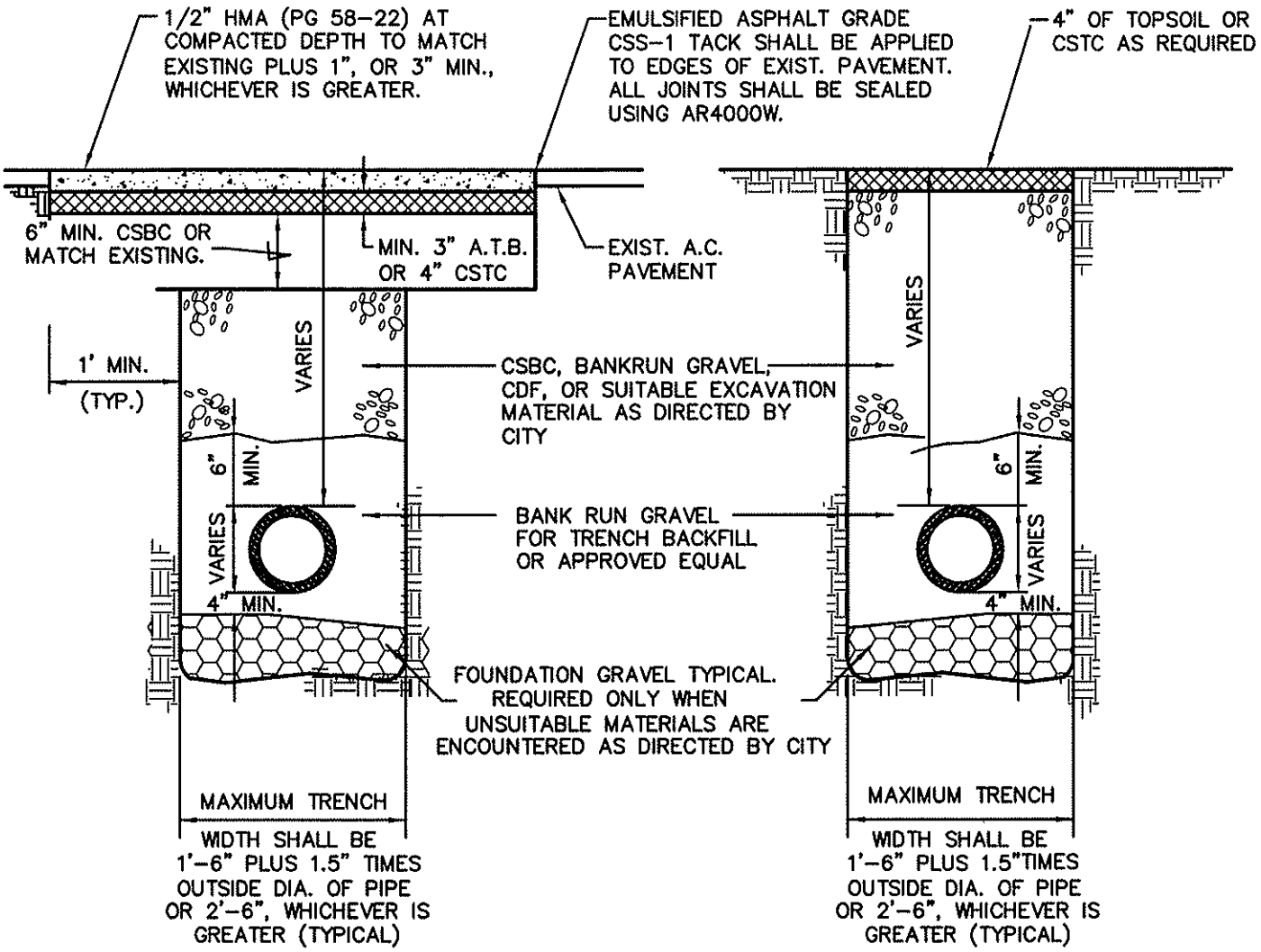

NOTES:

1. ALL MATERIALS EXCEPT A.C.P. AND BEDDING MATERIAL SHALL BE COMPACTED IN 6-INCH MAXIMUM LIFTS TO 95% DENSITY.
2. BEDDING SHALL CONFORM TO CITY STANDARDS OF STANDARD SPECIFICATIONS.
3. COMPACTION: BEDDING SHALL BE COMPACTED TO 95% MAX. AS DETERMINED BY ASTM D1557. BACKFILL SHALL BE COMPACTED TO 90% IN UNPAVED AREA, AND 95% IN PAVED OR SHOULDER AREAS AS DETERMINED BY ASTM D1557.
4. THE CITY MAY REQUIRE THAT TRENCH BACKFILL BE COMPLETED WITH CFD IN LIEU OF COMPACTED GRANULAR BACKFILL.
5. ALL MATERIALS, WORKMANSHIP, AND INSTALLATION SHALL BE IN CONFORMANCE WITH THE STANDARD SPECIFICATIONS FOR ROAD, BRIDGE AND MUNICIPAL CONSTRUCTION AS AMENDED BY CITY STANDARDS.

CITY OF GRANITE FALLS			
TRENCH – PAVEMENT RESTORATION			
APPROVED: Warren N. Perkins 4/10/08 BY CITY DATE			DWG. NO. TRE-REST
DATE: 3/2008	DRWN: M.S.	CHKD: W.P.	SCALE: NONE

L:\GRFALLS\00311 STD DETAILS\STANDARDS\TRE-REST.DWG, LAYOUT1, 3/7/2008 4:59:54 PM, 1:1, BY: PERKLINS W

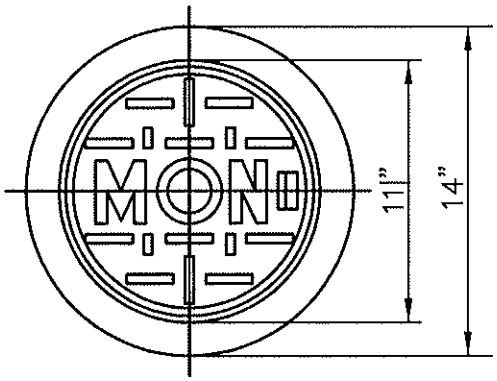

NOTES:

1. MACHINE BEARING FACES OF COVER AND CASE TO INSURE POSITIVE FIT.
2. MATERIAL SHALL CONFORM TO THE CURRENT VERSION OF THE "STANDARD SPECIFICATIONS FOR ROAD, BRIDGE AND MUNICIPAL CONSTRUCTION" PREPARED BY THE WASHINGTON STATE DEPT. OF TRANSPORTATION AND AMERICAN PUBLIC WORKS ASSOCIATION, WASHINGTON STATE CHAPTER.

MONUMENT COVER

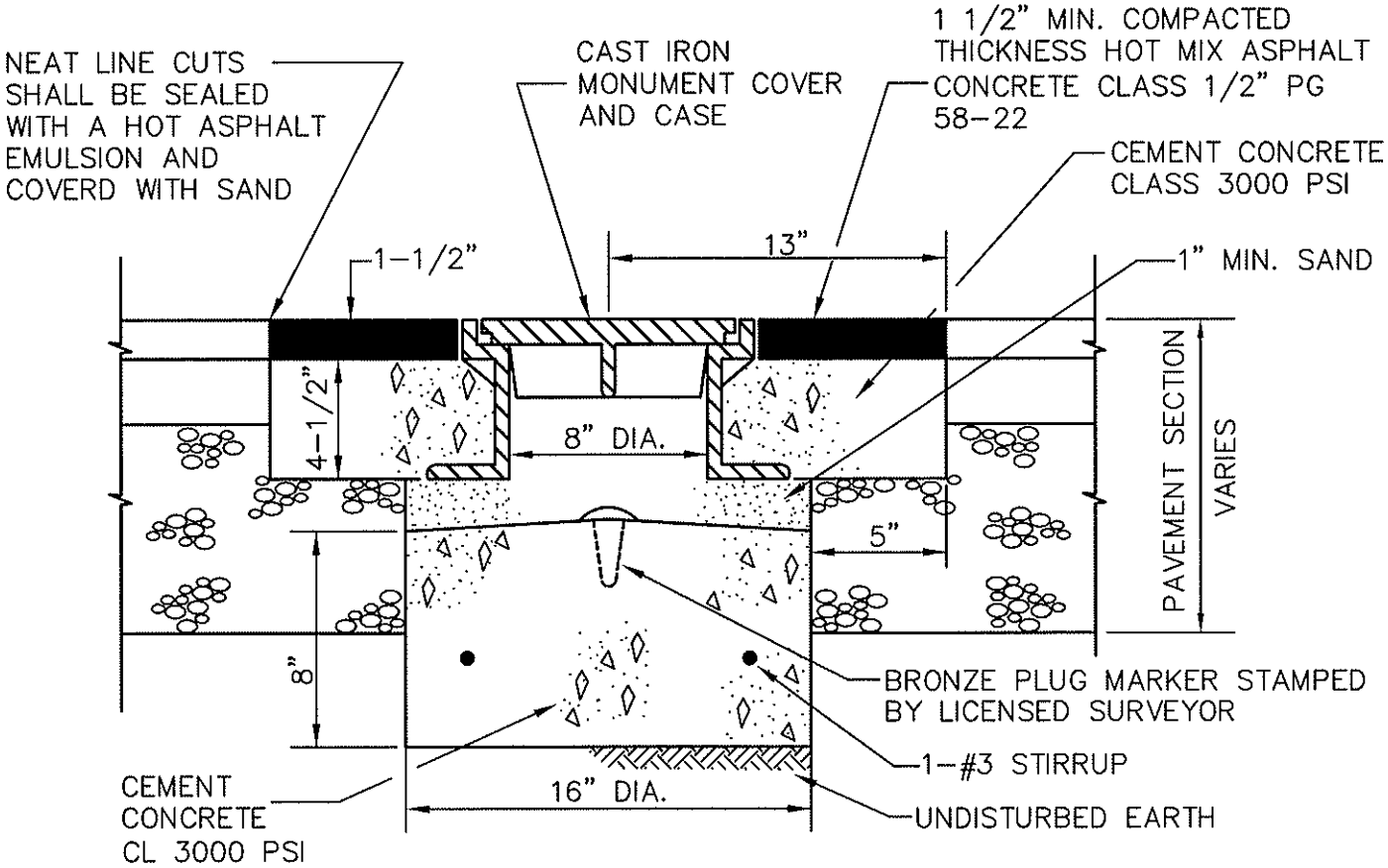

POURED MONUMENT IN PLACE

CITY OF GRANITE FALLS			
POURED MONUMENT IN PLACE			
APPROVED: Warren W. Perkins 4/10/08 BY CITY DATE			DWG. NO. MON-1
DATE: 3/2008	DRWN: M.S.	CHKD: W.P.	SCALE: NONE

L:\GRFALLS\00311 STD DETAILS\STANDARDS\MON-1.DWG, LAYOUT1, 3/21/2008 4:41:34 PM, 1:1, BY: PERKLINS W

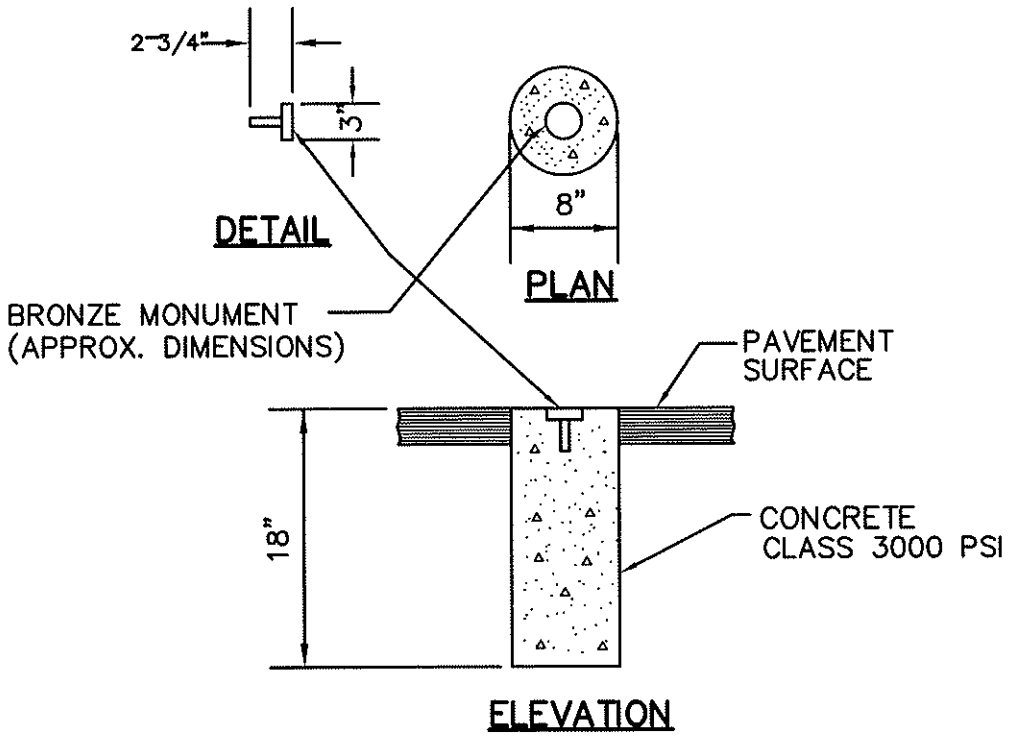

NOTE:

1. THE HOLE FOR THE MONUMENT SHALL BE CUT AFTER THE NEW PAVEMENT HAS BEEN CONSTRUCTED. THE UPPER 3" OF THE MONUMENT ENCASEMENT SHALL BE SHAPED TO A TRUE DIAMETER OF 8-INCH. CLASS 3000 PSI CONCRETE SHALL BE USED FOR ENCASEMENT. THE BRONZE MONUMENT WILL BE SET SIMULTANEOUSLY WITH THE POURING OF CONCRETE IN THE ENCASEMENT.
2. SURFACE MONUMENT WILL GENERALLY NOT BE ACCEPTED BUT WILL BE EVALUATED, UPON REQUEST, ON A CASE BY CASE BASIS.

CITY OF GRANITE FALLS			
SURFACE MONUMENT			
APPROVED: Warren W. Perkins 4/10/08 BY CITY DATE			DWG. NO. ST-8
DATE: 3/2008	DRWN: M.S.	CHKD: W.P.	SCALE: NONE

L:\GRFALLS\00311 STD DETAILS\STANDARDS\ST-8.DWG, LAYOUT1, 3/21/2008 4:13:35 PM, 1:1, BY: PERKLINS W

MINIMUM SIDEWALK WIDTHS

5'	(R-2.3, R-9600, R-7200) SINGLE FAMILY RESIDENTIAL AREAS (DETACHED DWELLINGS)
≥ 6'	(MR) MULTI-FAMILY RESIDENTIAL AREAS
≥ 6'	(LI, I, IR) INDUSTRIAL AREAS
≥ 6'	(GC, CBD ZONES) COMMERCIAL AREAS

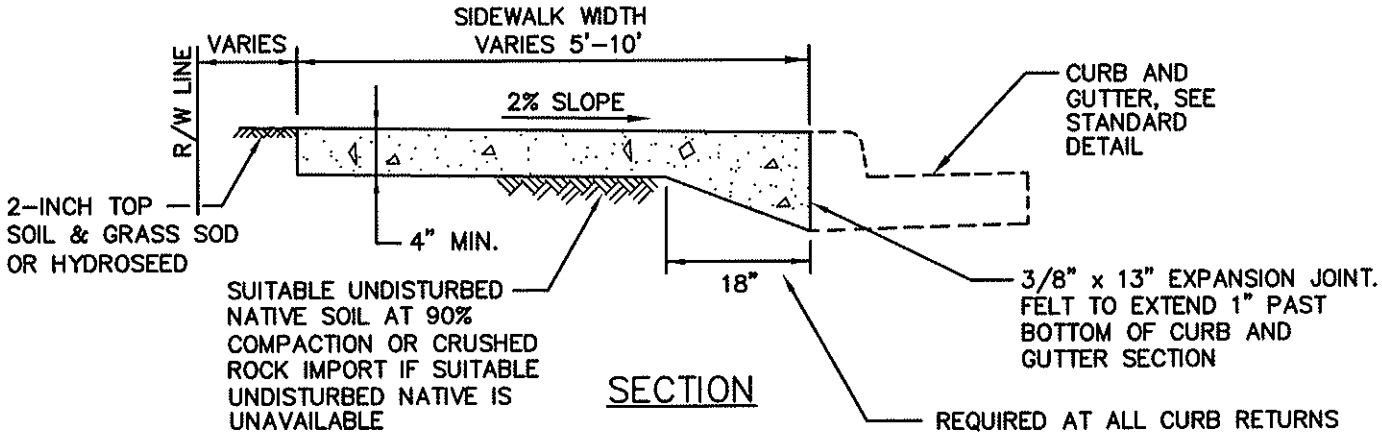

SECTION

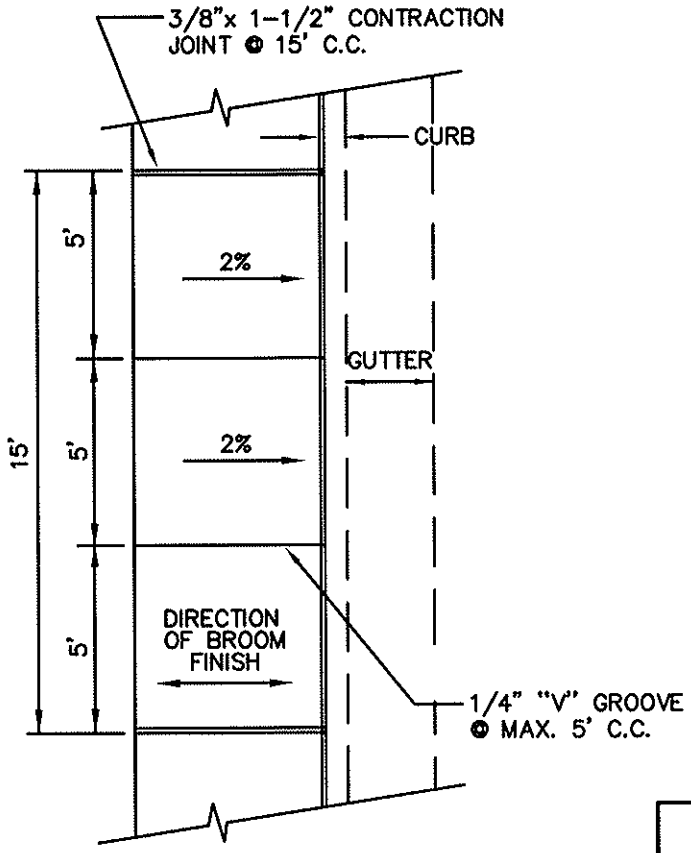

PLAN

MINIMUM SIDEWALK WIDTHS

5' MINIMUM, 10' MAXIMUM
SEE DESIGN STANDARDS

NOTES:

1. THRU JOINTS AND CONTRACTION JOINTS SHALL BE AS SHOWN ABOVE. THRU JOINTS SHALL ALSO BE PLACED IN THE SIDEWALK SECTION AT DRIVE-WAY AND ALLEY RETURNS. ALL JOINTS SHALL BE CLEAN AND EDGED WITH AN EDGE HAVING 1/4" RADIUS. JOINTS SHALL BE FLUSH WITH THE FINISHED SURFACE.
2. ALL UTILITY POLES, METER BOXES, ETC. IN IN SIDEWALK AREAS SHALL HAVE 3/8" JOINT MATERIAL (FULL DEPTH) PLACED AROUND THEM BEFORE PLACING CONCRETE.
3. PREMOLDED JOINT FILLER SHALL BE 3/8"x 2" ASPHALT SATURATED FELT OR PAPER.
4. FORMS SHALL BE EITHER WOOD OR STEEL AND SHALL MEET ALL REQUIREMENTS OF THESE SPECIFICATIONS.
5. CONCRETE SHALL BE CLASS 3000 PSI

SIDEWALK WITHOUT PLANTING STRIP

CITY OF GRANITE FALLS			
SIDEWALK WITHOUT PLANTING STRIP			
APPROVED: Warren W. Perkins 4/10/08 BY CITY DATE			DWG. NO. SW-1
DATE: 3/2008	DRWN: M.S.	CHKD: W.P.	SCALE: NONE

L:\GRFALLS\00311 STD DETAILS\STANDARDS\SW-1.DWG, LAYOUT1, 3/21/2008 4:48:15 PM, 1:1, By: PERKLINS W

MINIMUM SIDEWALK WIDTHS

5'	(R-2.3, R-9600, R-7200) SINGLE FAMILY RESIDENTIAL AREAS (DETACHED DWELLINGS)
≥ 6'	(MR) MULTI-FAMILY RESIDENTIAL AREAS
≥ 6'	(LI, I, IR) INDUSTRIAL AREAS
≥ 6'	(GC, CBD ZONES) COMMERCIAL AREAS

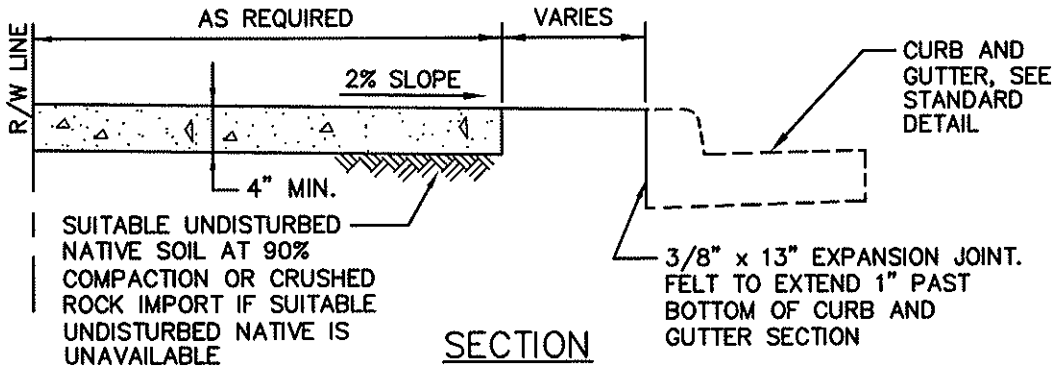

SECTION

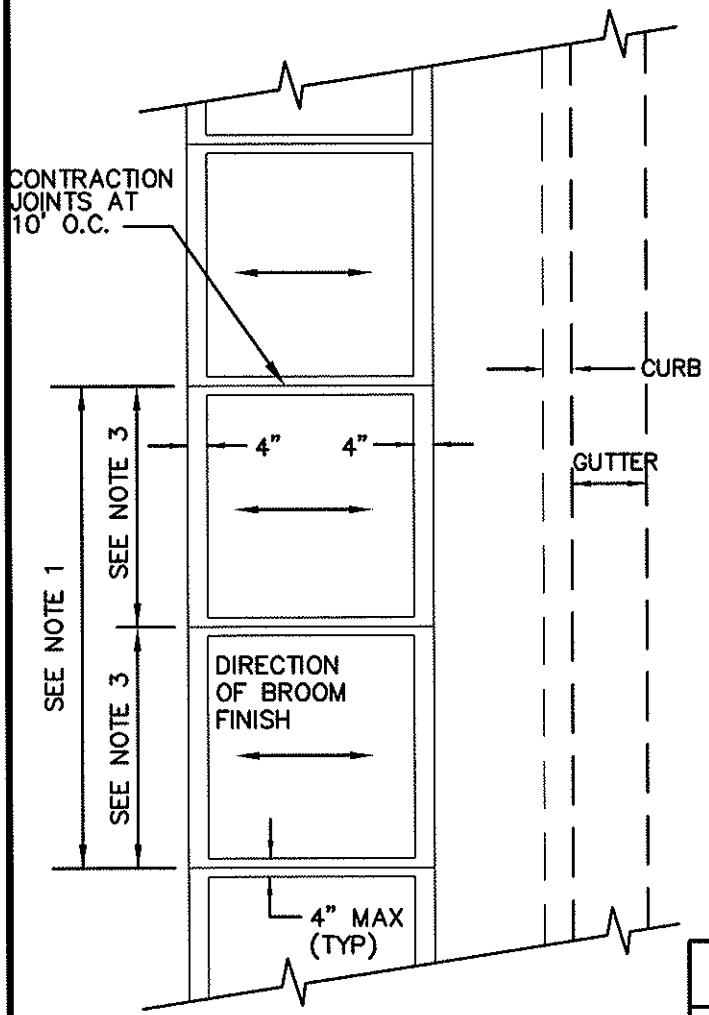

PLAN

NOTES:

1. CONTRACTION JOINTS SHALL BE 3/8" x 1 1/2" ASPHALT SATURATED FELT PLACED AT 10' O.C.
2. THRU JOINTS SHALL BE 3/8" x 4" ASPHALT SATURATED FELT PLACED AT DRIVEWAYS, ALLEY RETURNS AND WHEELCHAIR RAMPS AND RADIUSES.
3. V-GROOVEMARKS SHALL BE 1/8" DEEP AND 1/4" WIDE PLACED AT 5' o.c. FOR 5' SIDEWALKS AND 7 1/2' o.c. FOR 8' SIDEWALKS.
4. ALL JOINTS SHALL BE CLEAN AND EDGED TO A 1/4" RADIUS. JOINTS SHALL BE FLUSH WITH THE FINISHED SURFACE.
5. ALL UTILITY POLES AND STREET SIGN POSTS IN SIDEWALK AREA NOT REQUIRED TO BE RELOCATED BY THE CITY ENGINEER SHALL HAVE A SQUARE SECTION OF CONCRETE SURROUNDED BY 3/8" EXPANSION JOINT MATERIAL AROUND THE POLE. THE JOINT SHALL BE NO CLOSER THAN 6" TO ANY SIDE OF THE POLE.
6. FORMS SHALL BE EITHER WOOD OR STEEL AND SHALL MEET ALL REQUIREMENTS OF THESE SPECIFICATIONS.
7. CONCRETE SHALL BE CLASS 3000
   3000 PSI 5-1/2 SACK WITH 6% AIR
   COARSE AGGREGATE GRADING NO. 2
   FINE AGGREGATE CLASS 1

SIDEWALK WITH PLANTING STRIP

CITY OF GRANITE FALLS			
SIDEWALK WITH PLANTING STRIP			
APPROVED: Warren W. Perkins 9/10/08 BY CITY DATE			DWG. NO. SW-1A
DATE: 3/2008	DRWN: M.S.	CHKD: W.P.	SCALE: NONE

L:\GRFALLS\00311 STD DETAILS\STANDARDS\SW-1.DWG, LAYOUT1, 3/21/2008 4:47:14 PM, 1:1, By: PERKLINS W

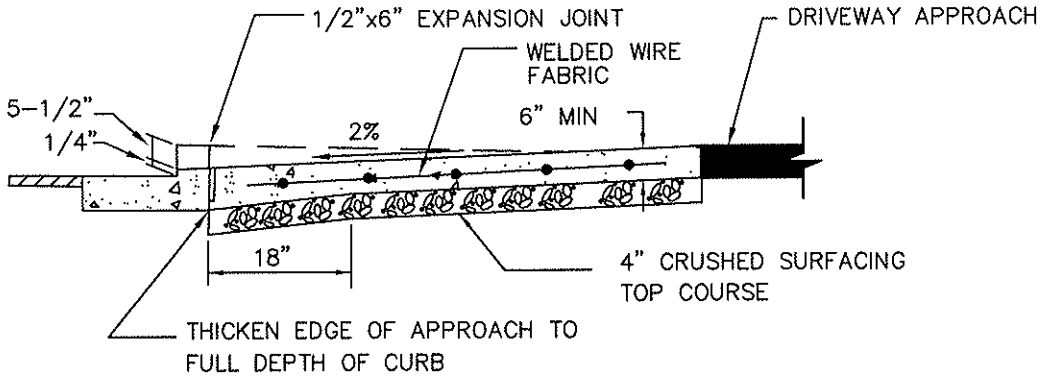

SECTION A-A

NOTES:

1. WELDED WIRE FABRIC (6"x6"_ WIDxWID WWF) REQUIRED FOR ALL COMMERICAL DRIVEWAY APPROACHES. FABRIC PLACED AT MID DEPTH IN CONCRETE.
2. BROOM FINISH SHALL BE PARALLEL TO ROADWAY WITHIN DRIVEWAY ONLY.
3. JOINTS SHALL BE STEEL TROWELED FOR FINISH.
4. CONCRETE SHALL BE CLASS 4000.

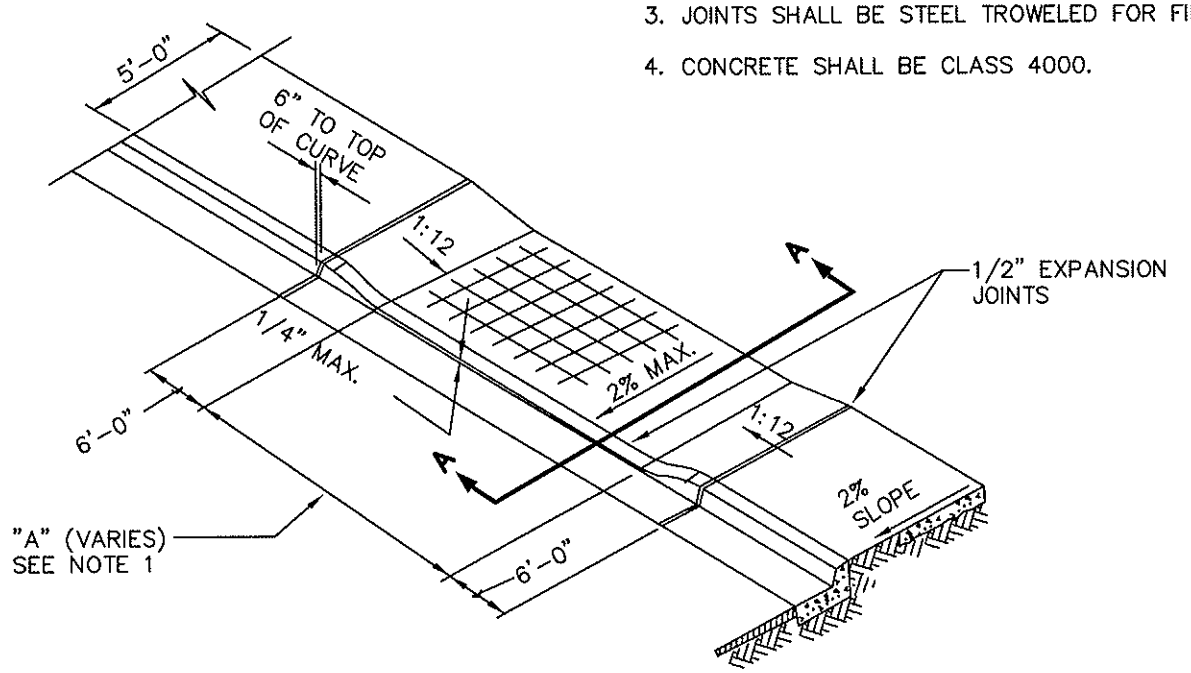

CEMENT CONCRETE DRIVEWAY NO PLANTER STRIP

CITY OF GRANITE FALLS			
CEMENT CONCRETE DRIVEWAY (NO PLANTER)			
APPROVED: Warren W. Perkins 4/10/08 BY CITY DATE			DWG. NO. DW-2
DATE: 3/2008	DRWN: M.S.	CHKD: W.P.	SCALE: NONE

L:\GRFALLS\0031I STD DETAILS\STANDARDS\DW-2.DWG, LAYOUT1, 3/7/2008 5:20:45 PM, I:I, BY: PERKLINS W

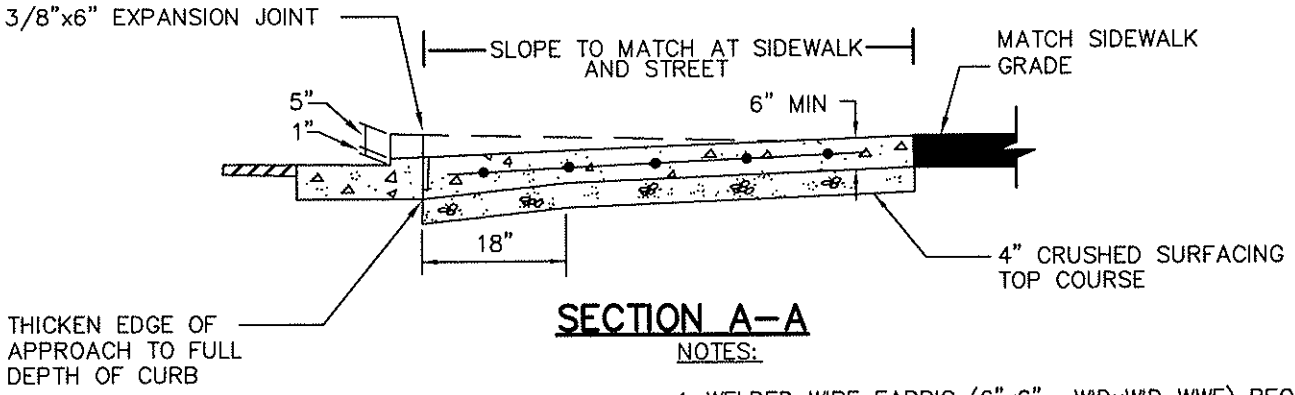

SECTION A–A

NOTES:

1. WELDED WIRE FABRIC (6"x6"_ WIDxWID WWF) REQUIRED FOR ALL COMMERICAL DRIVEWAY APPROACHES. FABRIC PLACED AT MID DEPTH IN CONCRETE.
2. BROOM FINISH SHALL BE PARALLEL TO ROADWAY WITHIN DRIVEWAY ONLY.
3. JOINTS SHALL BE STEEL TROWELED FOR FINISH.
4. CONCRETE SHALL BE CLASS 4000.

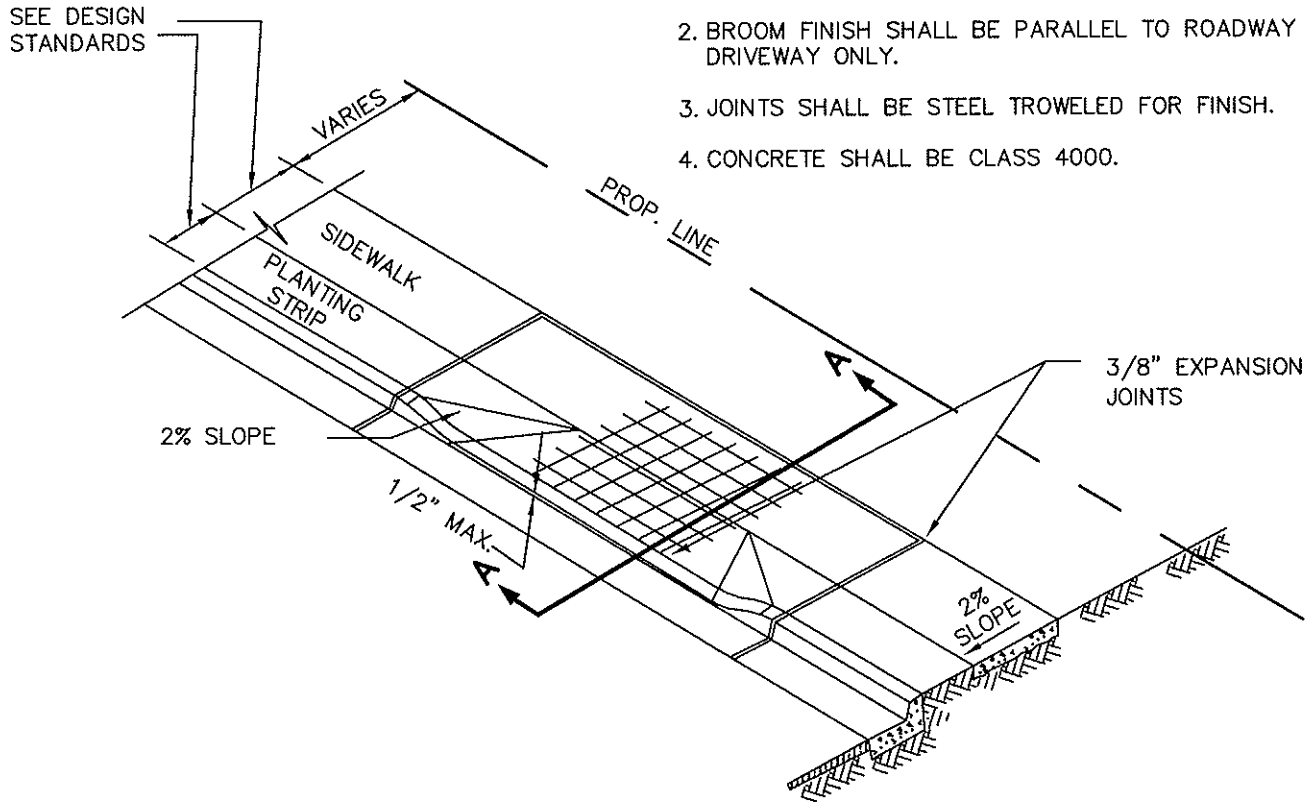

CEMENT CONCRETE DRIVEWAY WITH PLANTER STRIP

CITY OF GRANITE FALLS			
CEMENT CONCRETE DRIVEWAY (WITH PLANTER)			
APPROVED: Warren W. Perkins 4/10/08 BY CITY DATE			DWG. NO. DW–1
DATE: 3/2008	DRWN: M.S.	CHKD: W.P.	SCALE: NONE

L:\GRFALLS\00311 STD DETAILS\STANDARDS\DW-1.DWG, LAYOUT1, 3/25/2008 4:50:52 PM, 1:1, BY: PERKLINS W

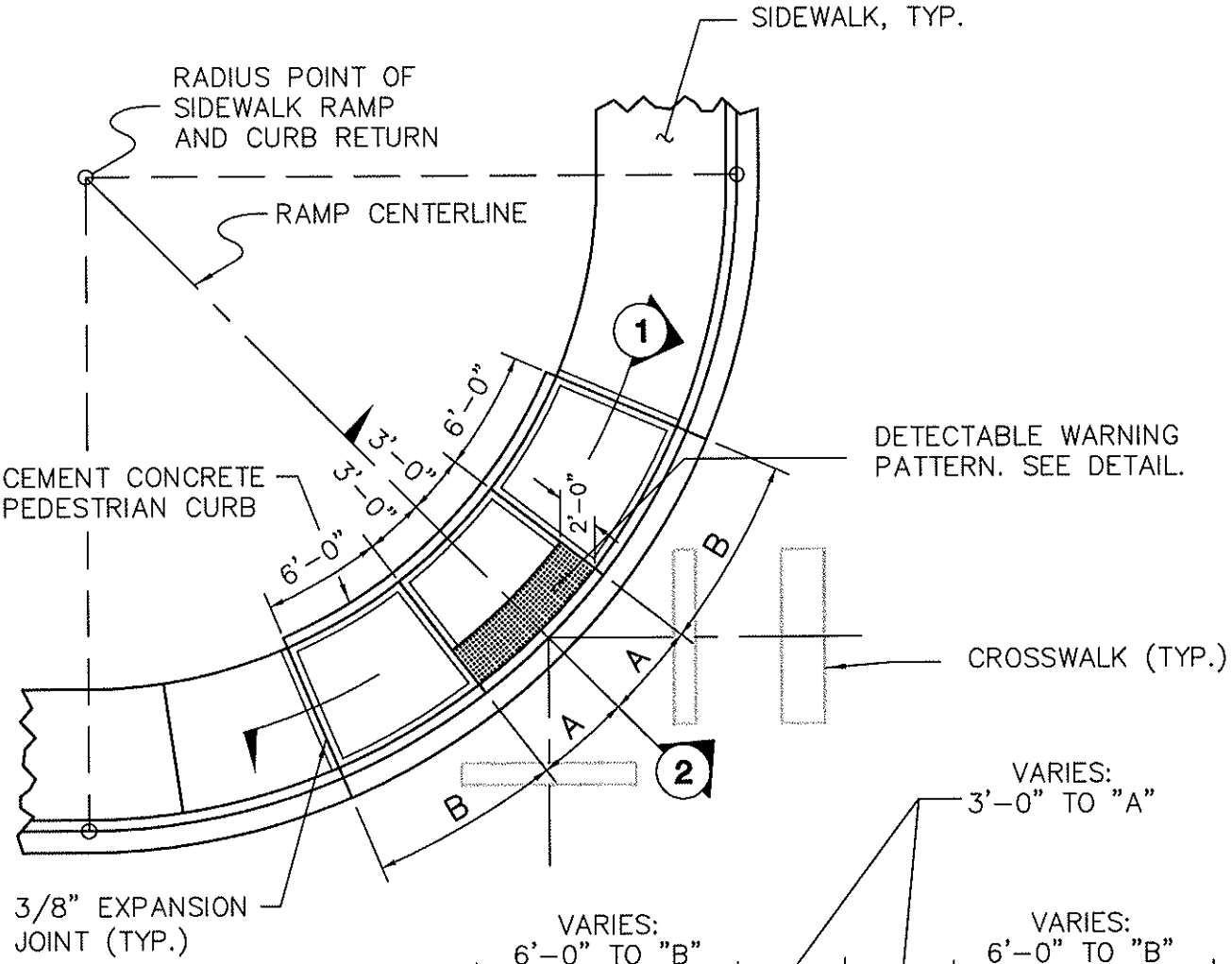

PLAN VIEW

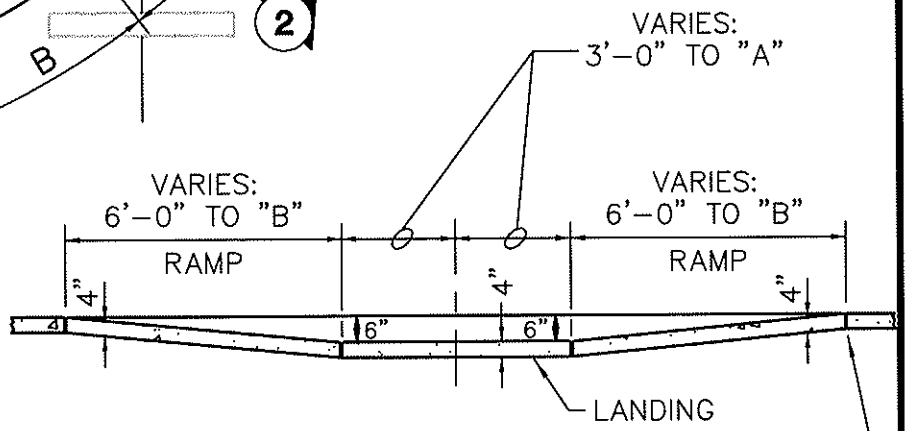

SECTION 1

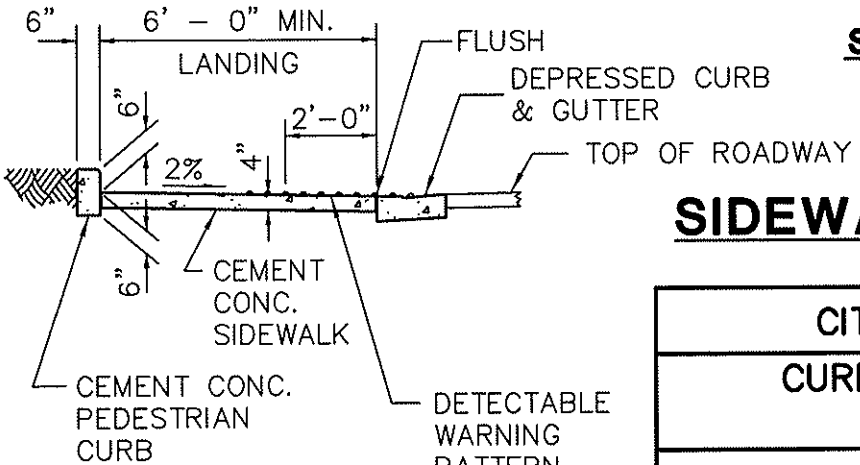

SECTION 2

SIDEWALK RAMP TYPE 2

NOT TO SCALE

CITY OF GRANITE FALLS			
CURB RAMP & TEXTURE DETAIL (1 of 2)			
APPROVED: Warren N. Perkins 4/10/08 BY CITY DATE			DWG. NO. CURB-RAM
DATE: 3/2008	DRWN: M.S.	CHKD: W.P.	SCALE: NONE

L:\GRFALLS\00311 STD DETAILS\STANDARDS\CURB-RAM.DWG, LAYOUT1, 4/10/2008 11:29:29 AM, 1:1, BY: W PERKINS

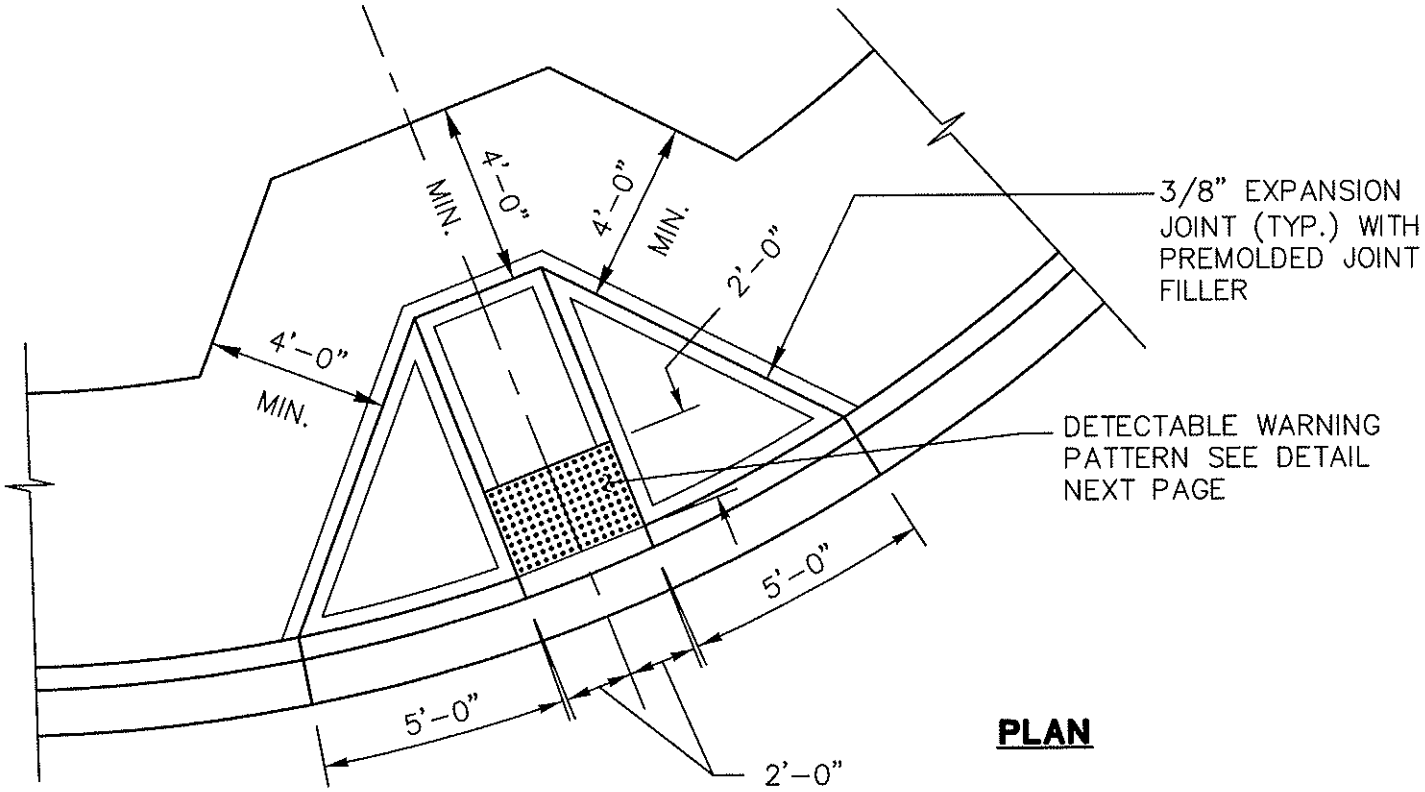

PLAN

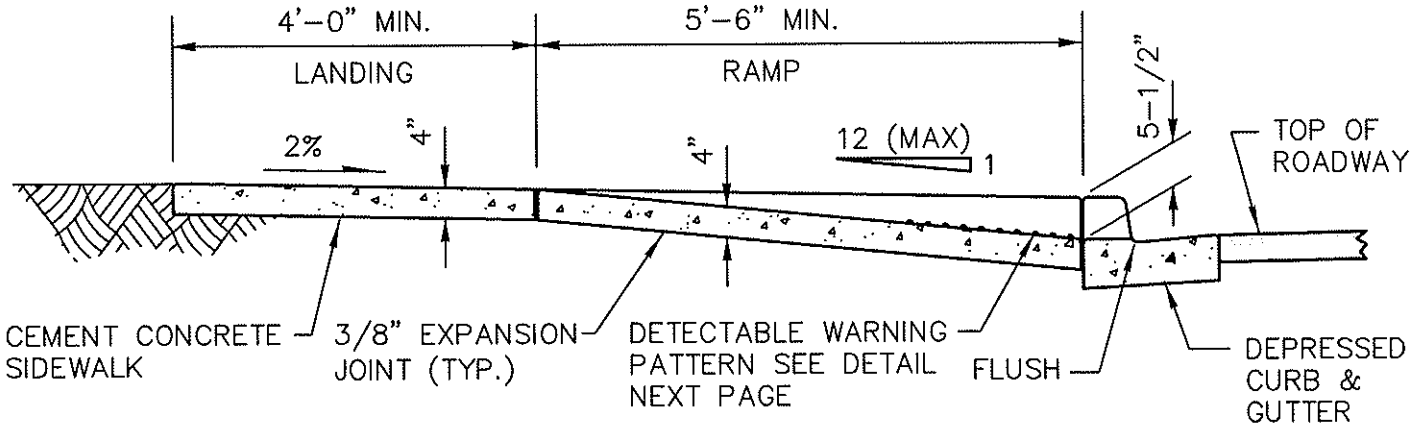

SECTION

SIDEWALK RAMP TYPE 1

NOT TO SCALE

CITY OF GRANITE FALLS			
CURB RAMP & TEXTURE DETAIL (1 of 2)			
APPROVED: Warren W. Parkins 4/10/08 BY CITY DATE			DWG. NO. CURB-RAM
DATE: 3/2008	DRWN: M.S.	CHKD: W.P.	SCALE: NONE

L:\GRFALLS\0031I STD DETAILS\STANDARDS\CURB-RAM.DWG, LAYOUT1, 3/21/2008 4:20:54 PM, 1:1, BY: PERKLINS W

DETECTABLE WARNING PATTERN AREA SHALL BE YELLOW, IN COMPLIANCE WITH WSDOT STD. SPEC. 8-14.3(3)

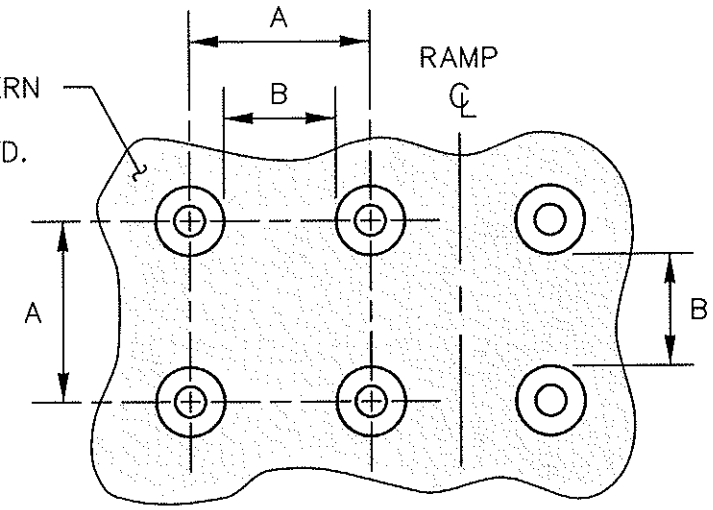

PLAN

	MIN.	MAX.
A	1 5/8"	2 3/8"
B	5/8"	1 1/2"
C	7/16"	3/4"
D	7/8"	1 7/16"

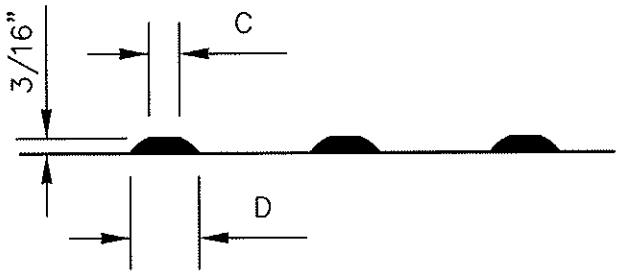

ELEVATION

TRUNCATED DOMES

NOTE:
DETECTABLE WARNING PATTERNS SHALL BE CAST IN PLACE (PREFABRICATED) BY ARMOR-TILE TACTILE SYSTEMS OR CONTRACTING AGENCY APPROVED EQUAL. SURFACE APPLIED SYSTEMS WILL NOT BE ALLOWED.

DETECTABLE WARNING PATTERN

NOT TO SCALE

CITY OF GRANITE FALLS			
CURB RAMP & TEXTURE DETAIL (2 of 2)			
APPROVED: Warren W Perkins 4/10/08 BY CITY DATE			DWG. NO. CURB-RAM
DATE: 3/2008	DRWN: M.S.	CHKD: W.P.	SCALE: NONE

L:\GRFALLS\003II STD DETAILS\STANDARDS\CURB-RAM.DWG, LAYOUT1, 3/21/2008 4:22:41 PM, 1:1, BY: PERKLINS W

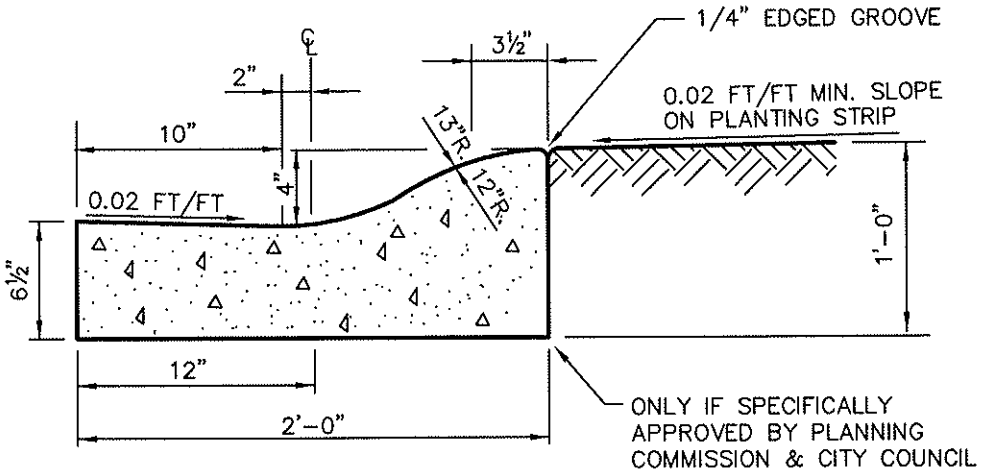

ROLLED CONCRETE CURB AND GUTTER

NOTES:

1. THE CURBS, GUTTERS AND SIDEWALKS SHALL HAVE CONTRACTION JOINTS (3/8" x 1½") AT INTERVALS OF NOT GREATER THAN 15'-0"
2. CEMENT CONCRETE SHALL BE 3000 PSI

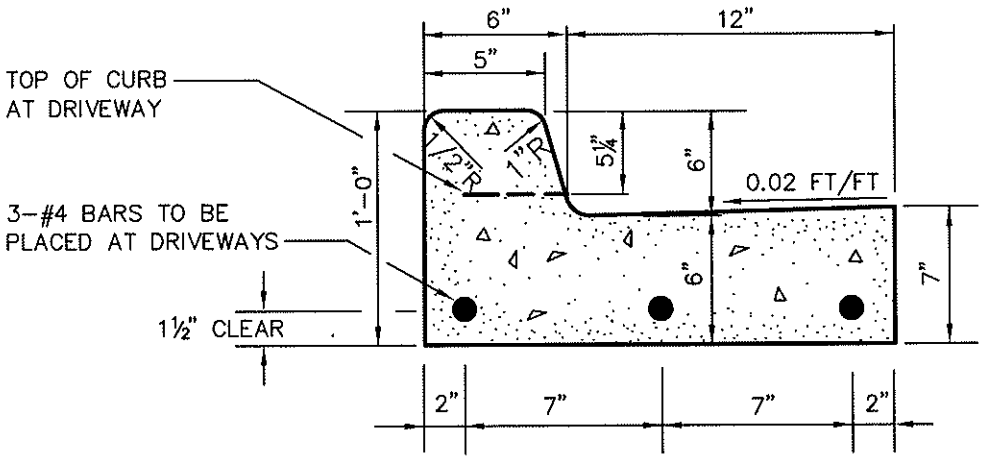

VERTICAL CONCRETE CURB AND GUTTER

CITY OF GRANITE FALLS			
CONCRETE CURB AND GUTTER			
APPROVED: Warren W. Perkins 4/10/08 BY CITY DATE			DWG. NO. CG-1
DATE: 3/2008	DRWN: M.S.	CHKD: W.P.	SCALE: NONE

L:\GRFALLS\0031I STD DETAILS\STANDARDS\CG-1.DWG, LAYOUT1, 3/21/2008 4:24:20 PM, 1:1, BY: PERKLINS W

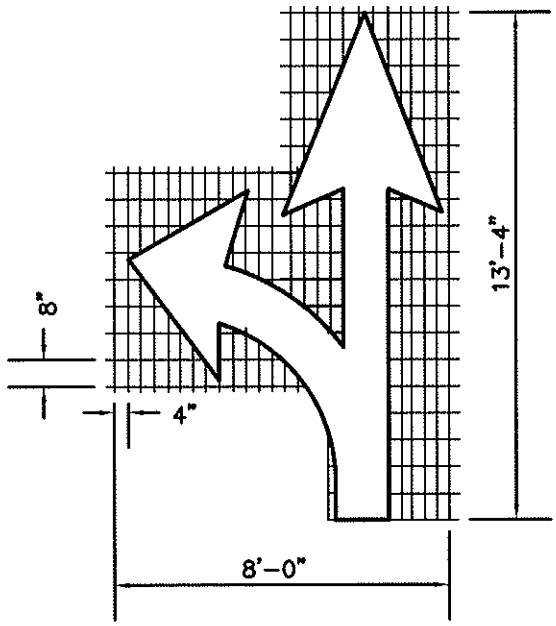

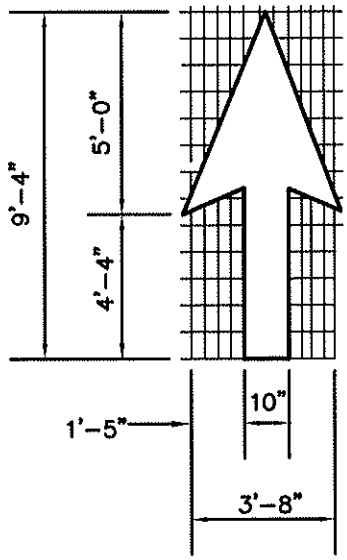

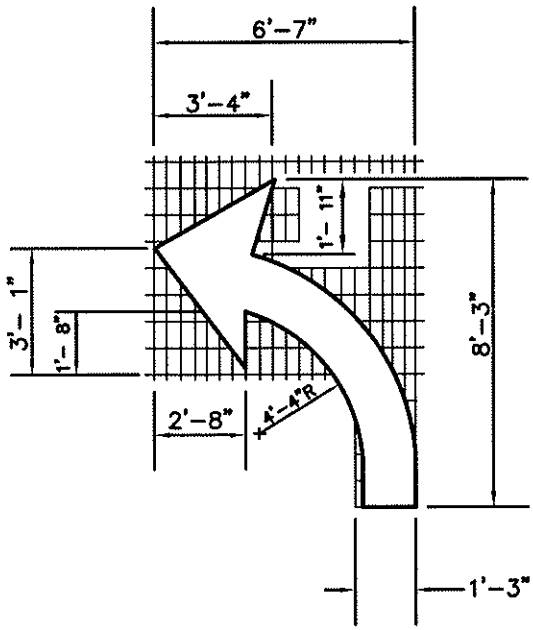

PAVEMENT MARKING ARROWS

NOT TO SCALE

CITY OF GRANITE FALLS			
TURN ARROW DETAILS			
APPROVED: Warren W. Perkins 4/10/08 BY CITY DATE			DWG. NO. CHAN-1
DATE: 3/2008	DRWN: M.S.	CHKD: W.P.	SCALE: NONE

L:\GRFALLS\00311 STD DETAILS\STANDARDS\CHAN-1.DWG, LAYOUT1, 3/21/2008 4:38:44 PM, 1:1, BY: PERKLINS W

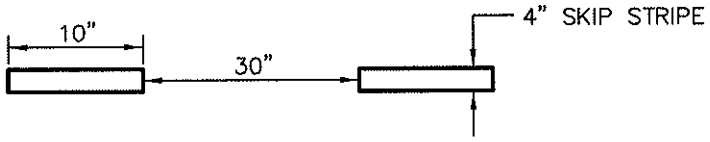

SKIP CENTERLINE STRIPE

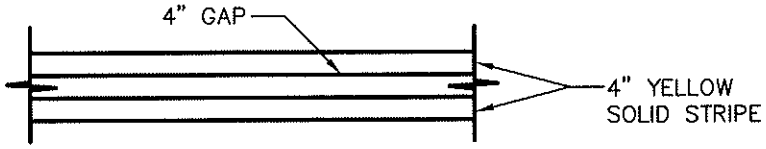

DOUBLE YELLOW CENTERLINE STRIPE

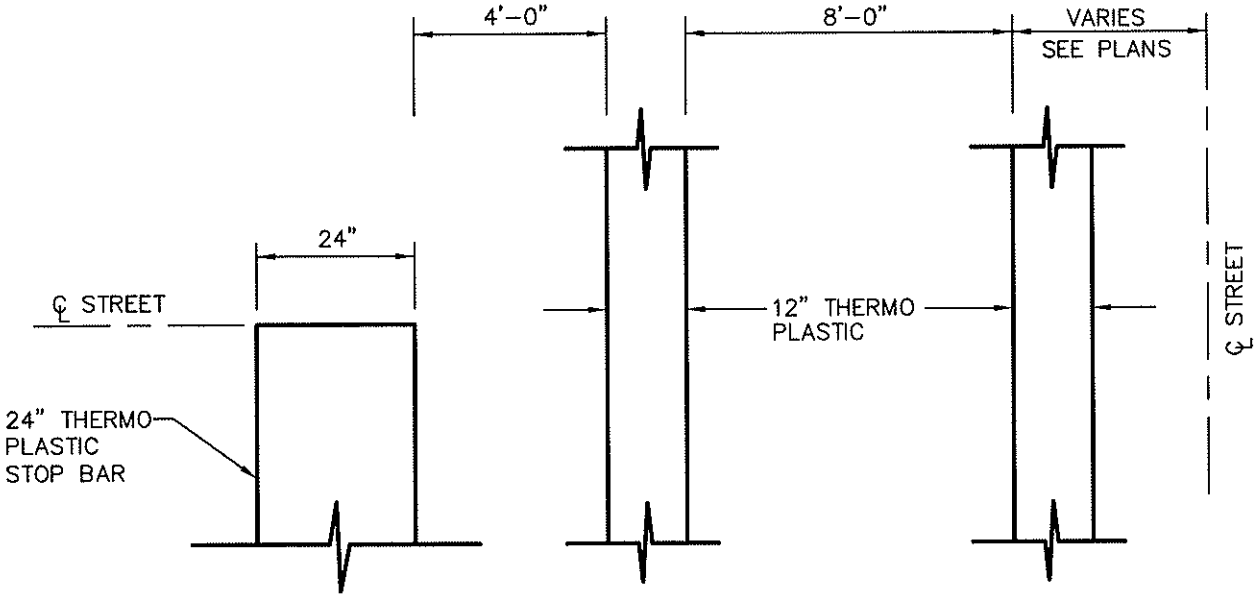

CROSSWALK

PAVEMENT MARKINGS

CITY OF GRANITE FALLS			
PAVEMENT MARKINGS			
APPROVED: Warren W Perkins 4/10/08 BY CITY DATE			DWG. NO. CHAN-2
DATE: 3/2008	DRWN: M.S.	CHKD: W.P.	SCALE: NONE

L:\GRFALLS\00311 STD DETAILS\STANDARDS\CHAN-2.DWG, LAYOUT1, 3/21/2008 4:26:57 PM, 1:1, BY: PERKLINS W

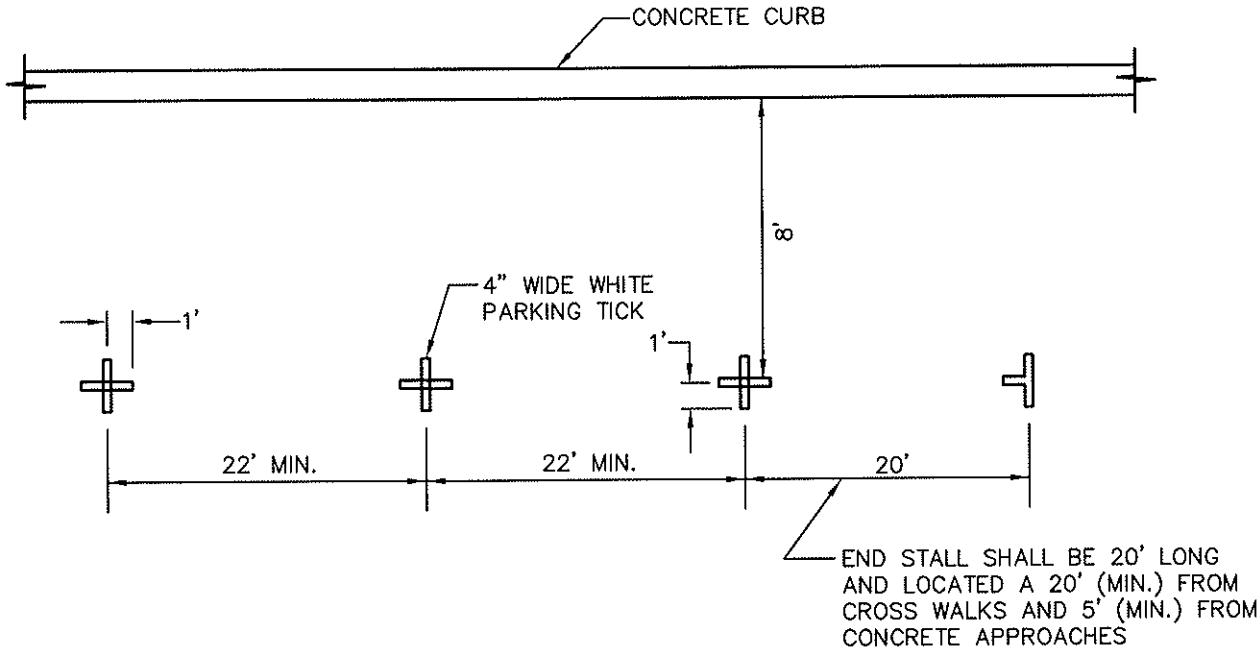

PARALLEL PARKING SPACE MARKING

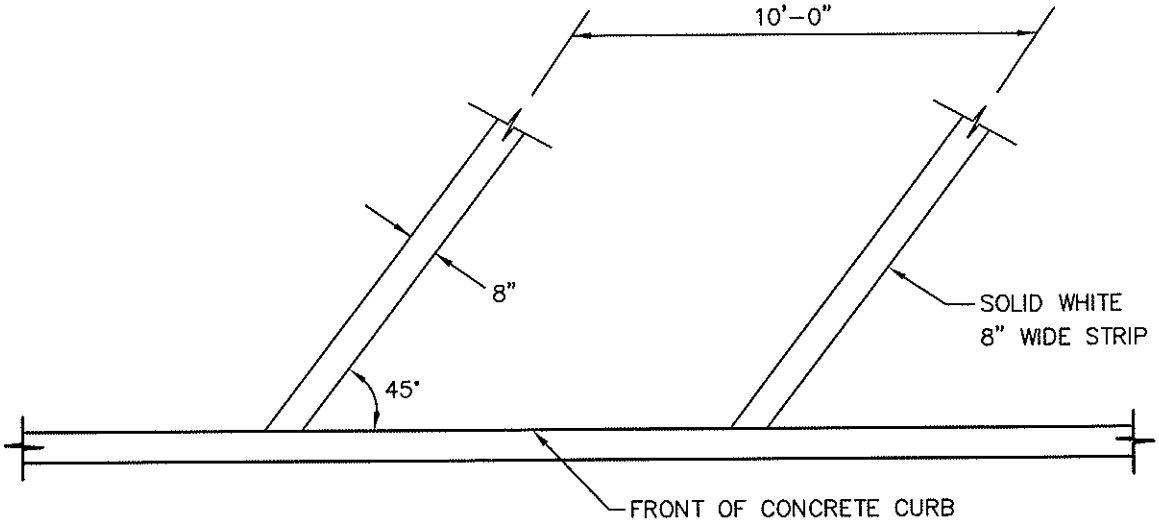

ANGLE PARKING SPACE MARKING

CITY OF GRANITE FALLS			
PARKING SPACE MARKINGS			
APPROVED: Warren W. Perkins 4/10/08 BY CITY DATE			DWG. NO. CHAN-3
DATE: 3/2008	DRWN: M.S.	CHKD: W.P.	SCALE: NONE

L:\GRFALLS\00311 STD DETAILS\STANDARDS\CHAN-3.DWG, LAYOUT1, 3/21/2008 4:28:03 PM, 1:1, BY: PERKLINS W

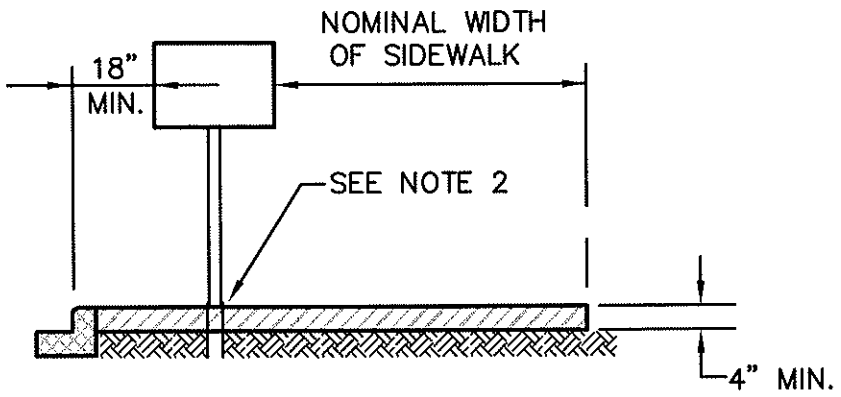

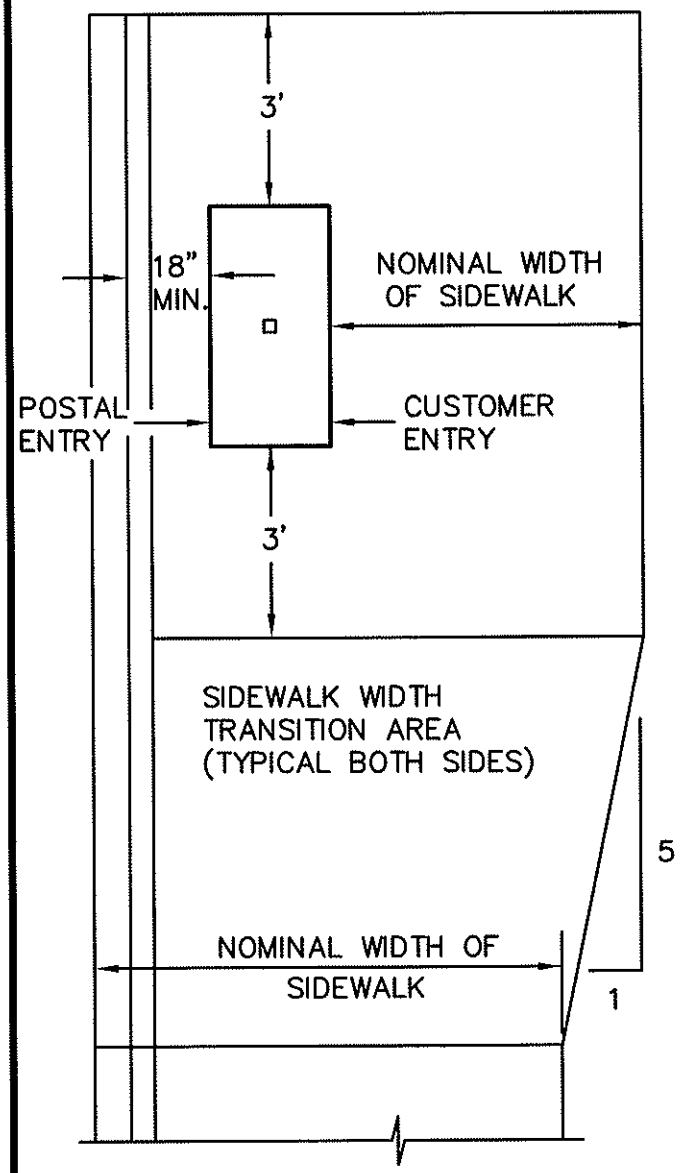

GENERAL NOTES:

1. SEE SECTION 5.25 FOR ADDITIONAL REQUIREMENTS
2. PROVIDE REINFORCED GALVANIZED SLEEVE PLANTED FIRMLY IN GROUND AND THROUGH SIDEWALL (USE JOINT FILLER AROUND SLEEVE).

CITY OF GRANITE FALLS			
MAILBOX DETAIL			
APPROVED: Warren W. Perkins 4/10/08 BY CITY DATE			DWG. NO. ML-1
DATE: 3/2008	DRWN: M.S.	CHKD: W.P.	SCALE: NONE

L:\GRFALLS\00311 STD DETAILS\STANDARDS\ML-1.DWG, LAYOUT1, 3/21/2008 4:29:22 PM, 1:1, BY: PERKLINS W

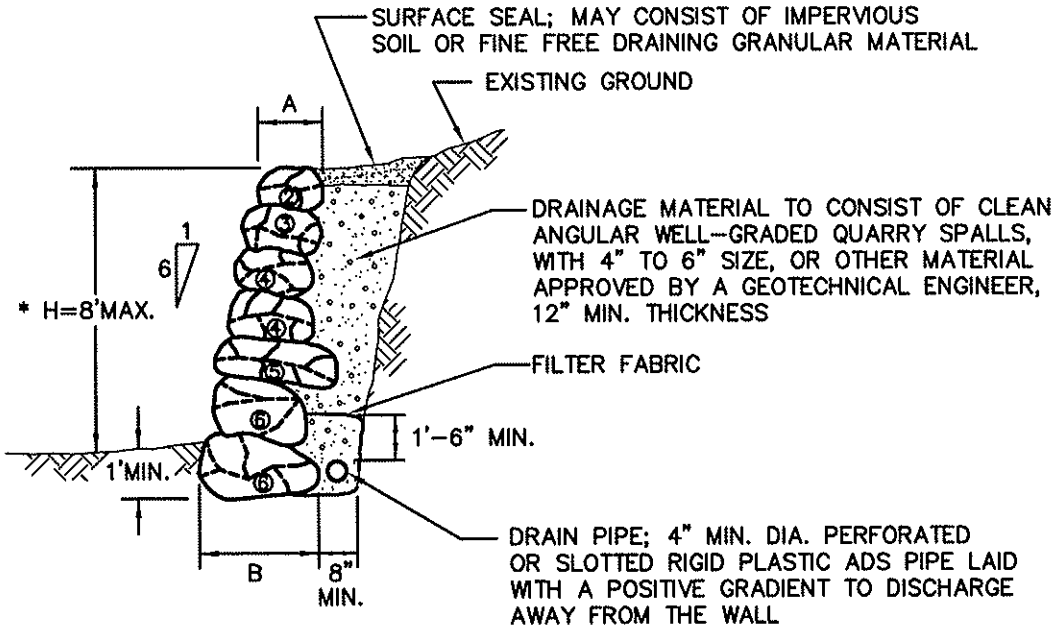

SECTION

SIZE	APPROXIMATE WEIGHT – LBS.	APPROXIMATE DIAMETER
1 MAN	50–200	12"– 18"
2 MAN	200–700	18"– 28"
3 MAN	700–2000	28"– 36"
4 MAN	2000–4000	36"– 48"
5 MAN	4000–6000	48"– 54"
6 MAN	6000–8000	54"– 50"

* NOTE:
4' MIN. HIGH CYCLONE FENCE REQUIRED ABOVE WALL WHEN WALL HEIGHT IS 3' OR GREATER

NOTE:
WALLS OVER 8 FEET HIGH IN CUT SLOPE, 30 INCHES HIGH IN FILL SLOPE OR IN UNSTABLE SOILS SHALL BE DESIGNED BY AN ENGINEER LICENSED IN THE STATE OF WASHINGTON

H	B	A	REVISIONS
6'– 0" OR LESS	3'– 0"	2'– 0"	
6'– 0' H≤ 8'– 0"	4'– 4"	3'– 0"	

ROCKERY SCHEDULE

ROCK WALL DETAIL

CITY OF GRANITE FALLS			
ROCK WALL DETAIL			
APPROVED: Warren N. Perkins 4/10/08 BY CITY DATE			DWG. NO. RKWL
DATE: 3/2008	DRWN: M.S.	CHKD: W.P.	SCALE: NONE

L:\GRFALLS\00311 STD DETAILS\STANDARDS\RKWL.DWG, LAYOUT1, 3/7/2008 5:24:20 PM, 1:1, BY: PERKLINS W

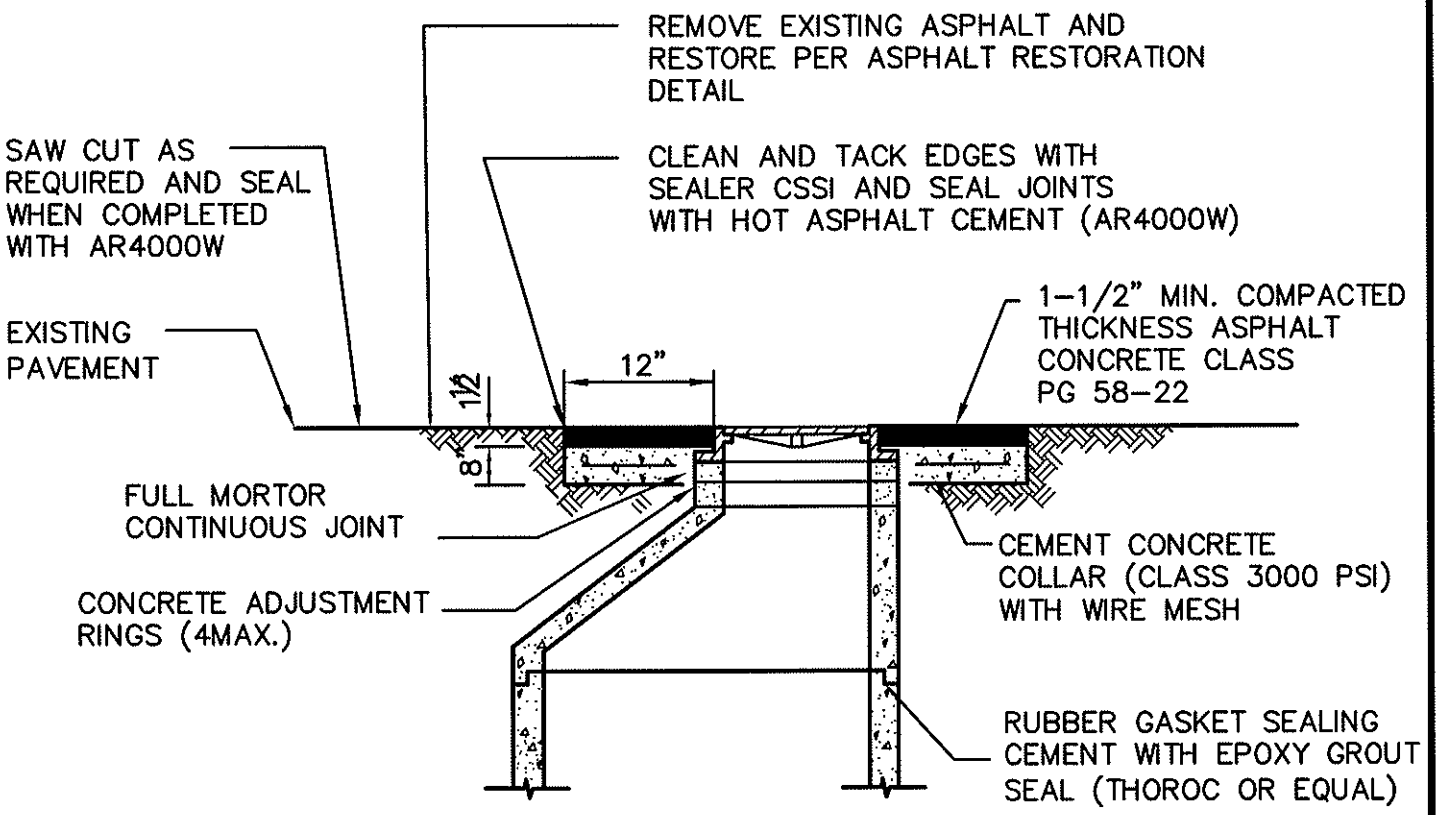

NOTE:

CEMENT CONCRETE COLLAR TO BE 12 INCHES IN THICKNESS ON DESIGNATED TRUCK ROUTES

CITY OF GRANITE FALLS			
MANHOLE, OR CATCH BASIN (TYPE II) GRADE ADJUSTMENT DETAIL			
APPROVED: 4/10/08 BY CITY DATE			DWG. NO. STOM-2
DATE: 3/2008	DRWN: M.S.	CHKD: W.P.	SCALE: NONE

L:\GRFALLS\00311 STD DETAILS\STANDARDS\STOM-2.DWG, LAYOUT1, 3/21/2008 4:31:11 PM, 1:1, BY: PERKLINS W

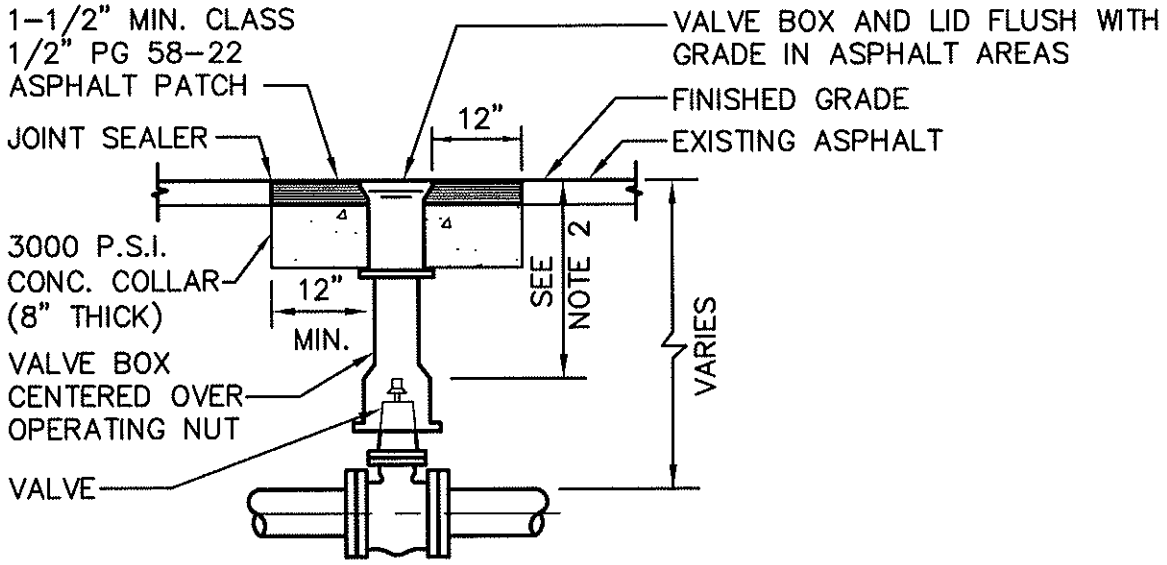

VALVE BOX IN ASPHALT AREA

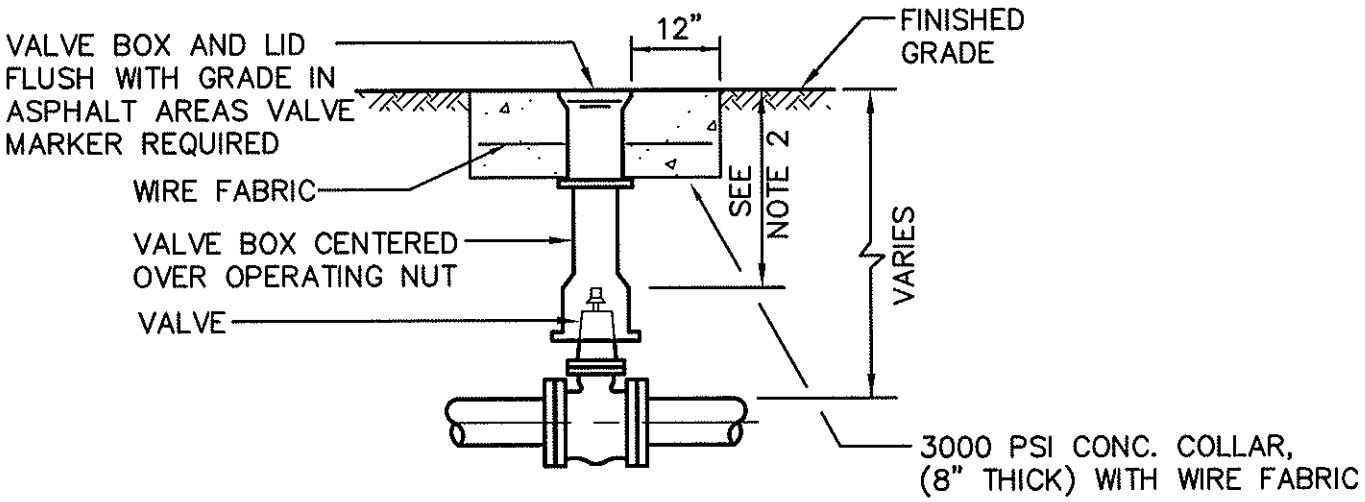

VALVE BOX IN UNIMPROVED AREA

NOTES:

1. EACH VALVE SHALL BE PROVIDED WITH AND ADJUSTABLE CAST IRON VALVE BOX OF 5 INCHES (5") INSIDE DIAMETER. VALVE BOXES SHALL HAVE A TOP SECTION WITH AN EIGHTEEN INCH (18") MIN. LENGTH. THE VALVE BOX SHALL BE RICH No. 940 OR APPROVED EQUAL. VALVE BOX EARS SHALL BE PLACED IN LINE WITH PIPE IT SERVES.

2. 15" MINIMUM, 36" MAXIMUM FOR OPERATOR NUT. EXTENSION MAY BE REQUIRED.

CITY OF GRANITE FALLS			
VALVE BOX			
APPROVED: Warren R. Perkins 4/10/08 BY CITY DATE			DWG. NO. VALV-BOX
DATE: 3/2008	DRWN: M.S.	CHKD: W.P.	SCALE: NONE

L:\GRFALLS\00311 STD DETAILS\STANDARDS\VALV-BOX.DWG, LAYOUT1, 4/8/2008 3:54:17 PM, 1:1, BY: W PERKINS

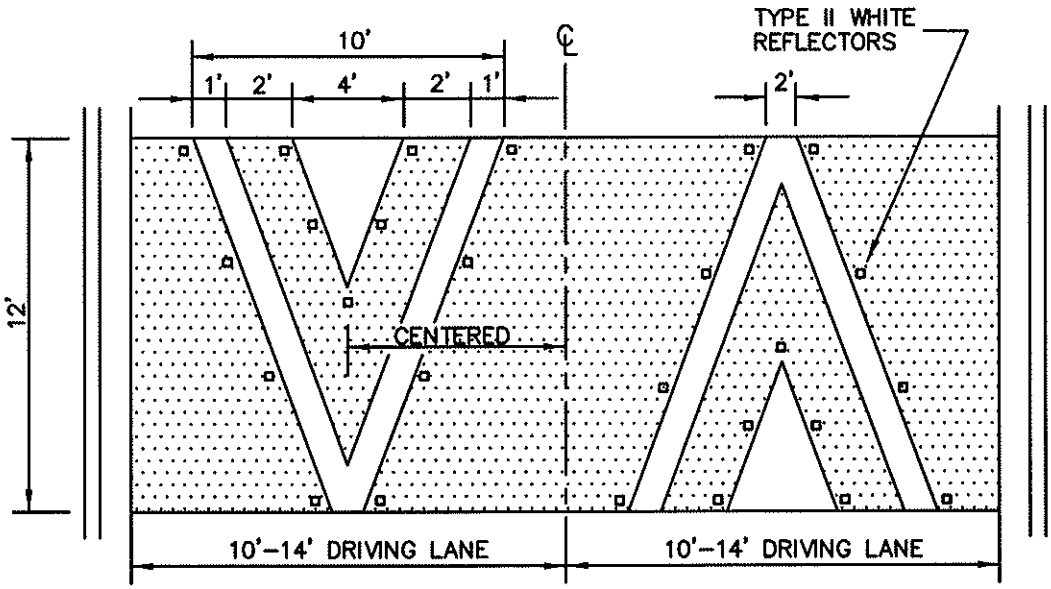

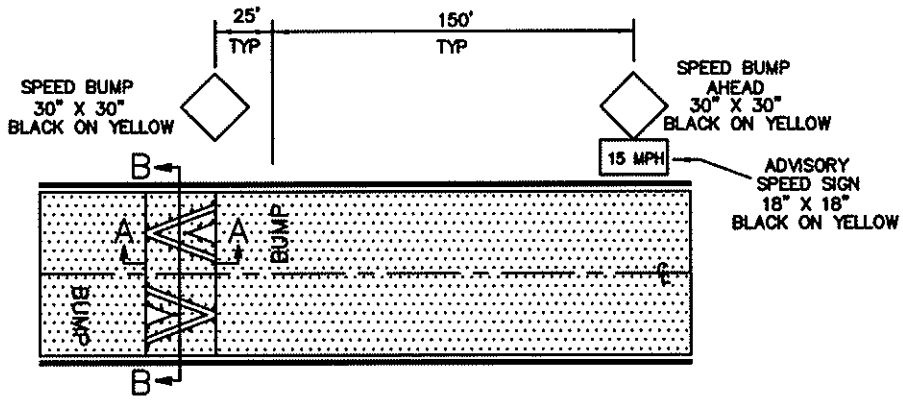

SECTION A–A

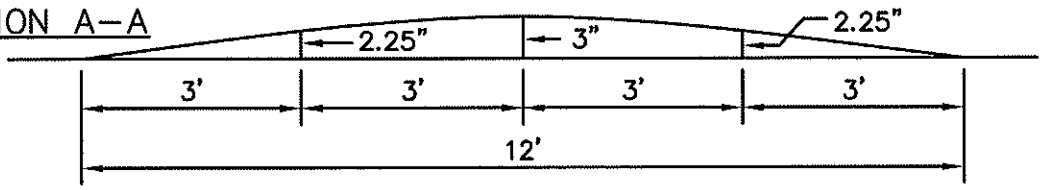

SECTION B–B

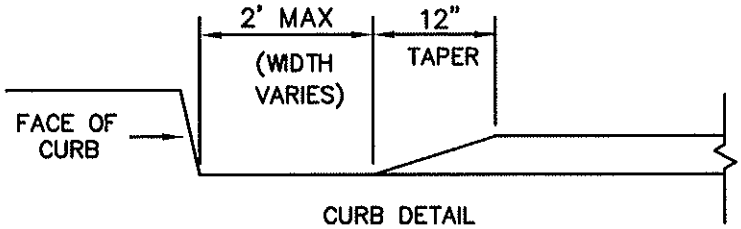

CURB DETAIL

NOTES

1. SIGN AND LEGEND LOCATION SHALL BE VERIFIED BY THE ENGINEER PRIOR TO INSTALLATION.
2. LEGEND AND V MARKINGS TO BE THERMOPLASTIC.

CITY OF GRANITE FALLS			
SPEED HUMP: DESIGN, PAVEMENT MARKING, AND SIGNING			
APPROVED: Warren W. Perkins 4/10/08 BY CITY DATE			DWG. NO. SPD–HUMP
DATE: 3/2008	DRWN: M.S.	CHKD: W.P.	SCALE: NONE

L:\GRFALLS\00311 STD DETAILS\STANDARDS\SPD-HUMP.DWG, LAYOUT1, 3/21/2008 4:33:39 PM, 1:1, BY: PERKLINS W

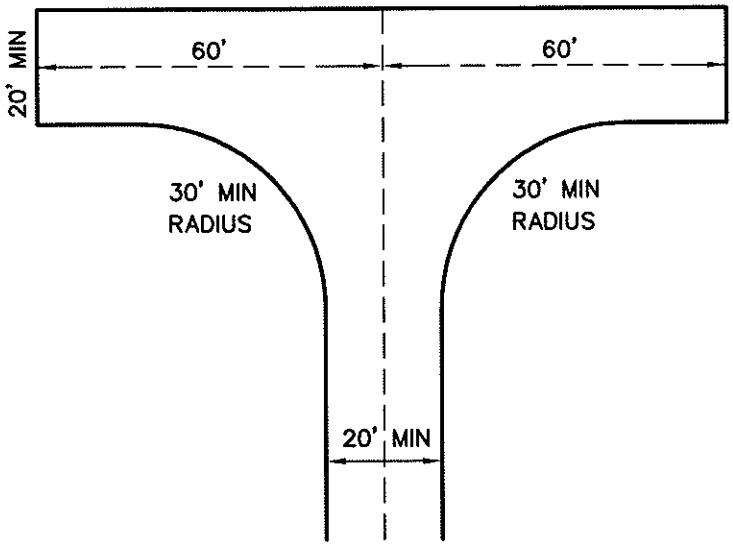

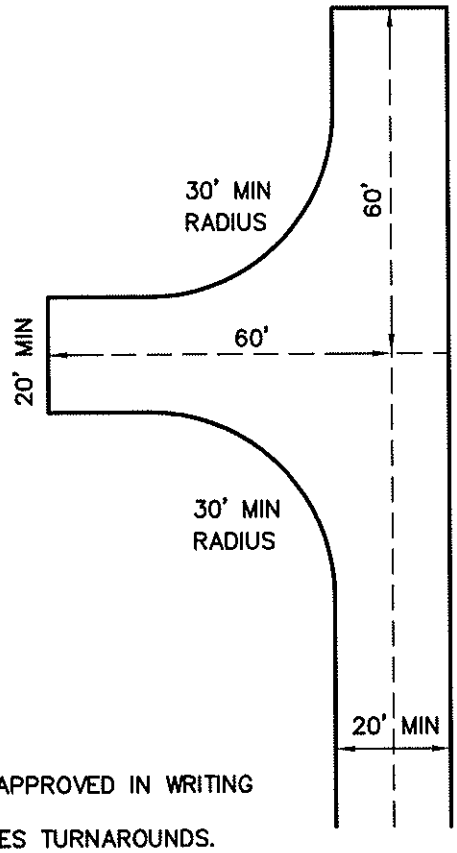

NOTES:

1. THIS ACCESS TURNAROUND SHALL ONLY BE UTILIZED IF SPECIFICALLY APPROVED IN WRITING BY THE CITY FIRE MARSHALL
2. THESE DRAWINGS ILLUSTRATE TYPICAL APPROVED FIRE APPARATUS ACCES TURNAROUNDS. THE SIDE ACCESS DESIGN MAY BE RIGHT OR LEFT (LEFT DIRECTION SHOWN).
3. ALL DIMENSIONS ARE MINIMUM REQUIREMENTS.
4. OTHER SHAPED ACCESS TURNAROUNDS ARE AN ACCEPTABLE ALTERNATIVE TO THOSE SHOWN, PROVIDED THE DESIGN MEETS THE MINIMUM DIMENSION REQUIREMENTS SHOWN ABOVE.
5. THE ALTERNATIVE FIRE ACCESS TURNAROUND SHALL BE MARKED AS A FIRE LANE IN ACCORDANCE WITH K.C.C. 17.04.070.
6. MINIMUM ROAD WIDTH SHOWN DOES NOT INCLUDE ANY SHOULDER DIMENSIONS OR CURB DIMENSIONS IF REQUIRED.

PACIFIC FIRE DEPT CRITERIA:

A. ALL LEGS OF THE TURNAROUND SHALL BE A MINIMUM OF 20 FEET OF UNDISTURBED WIDTH.
B. THERE SHALL BE A MINIMUM OF 30 FEET INSIDE RADIUS BETWEEN THE FIRE ACCESS ROAD AND THE LEGS.
C. THERE SHALL BE A MINIMUM OF 60 FEET FROM THE INTERSECTION OF THE CENTERLINE OF THE FIRE APPARATUS ACCESS ROAD AND THE CENTERLINE OF THE LEG TO THE END OF ALL LEGS.
D. THE ALTERNATIVE FIRE APPARATUS ACCESS TURNAROUND SHALL BE MARKED AS A FIRE LANE PER CITY FIRE MARSHALL.
E. THE ALTERNATIVE FIRE APPARATUSS ACCESS TURNAROUND SHALL MEET THE SAME GRADE AND SURFACING STANDARDS APPLIED TO FIRE ACCESS ROADS.
F. THE MAXIMUM CROSS SLOPE ON AN ALTERNATIVE FIRE APPARATUS ACCESS TURNAROUND SHALL NOT EXCEED SIX PERCENT.
G. ALTERNATIVE DESIGNS THAT DO NOT MEET THE CRITERIA ESTABLISHED IN THIS SECTION MAY BE APPROVED BY THE CITY FIRE MARSHALL.

CITY OF GRANITE FALLS			
ALTERNATIVE FIRE APPARATUS ACCESS TURNAROUNDS			
APPROVED: Warren W. Perkins 4/10/08 BY CITY DATE			DWG. NO. AAT
DATE: 3/2008	DRWN: M.S.	CHKD: W.P.	SCALE: NONE

L:\GRFALLS\00311 STD DETAILS\STANDARDS\AAT.DWG, LAYOUT1, 4/9/2008 10:20:11 AM, 1:1, BY: W PERKINS

Storm Sewer Details

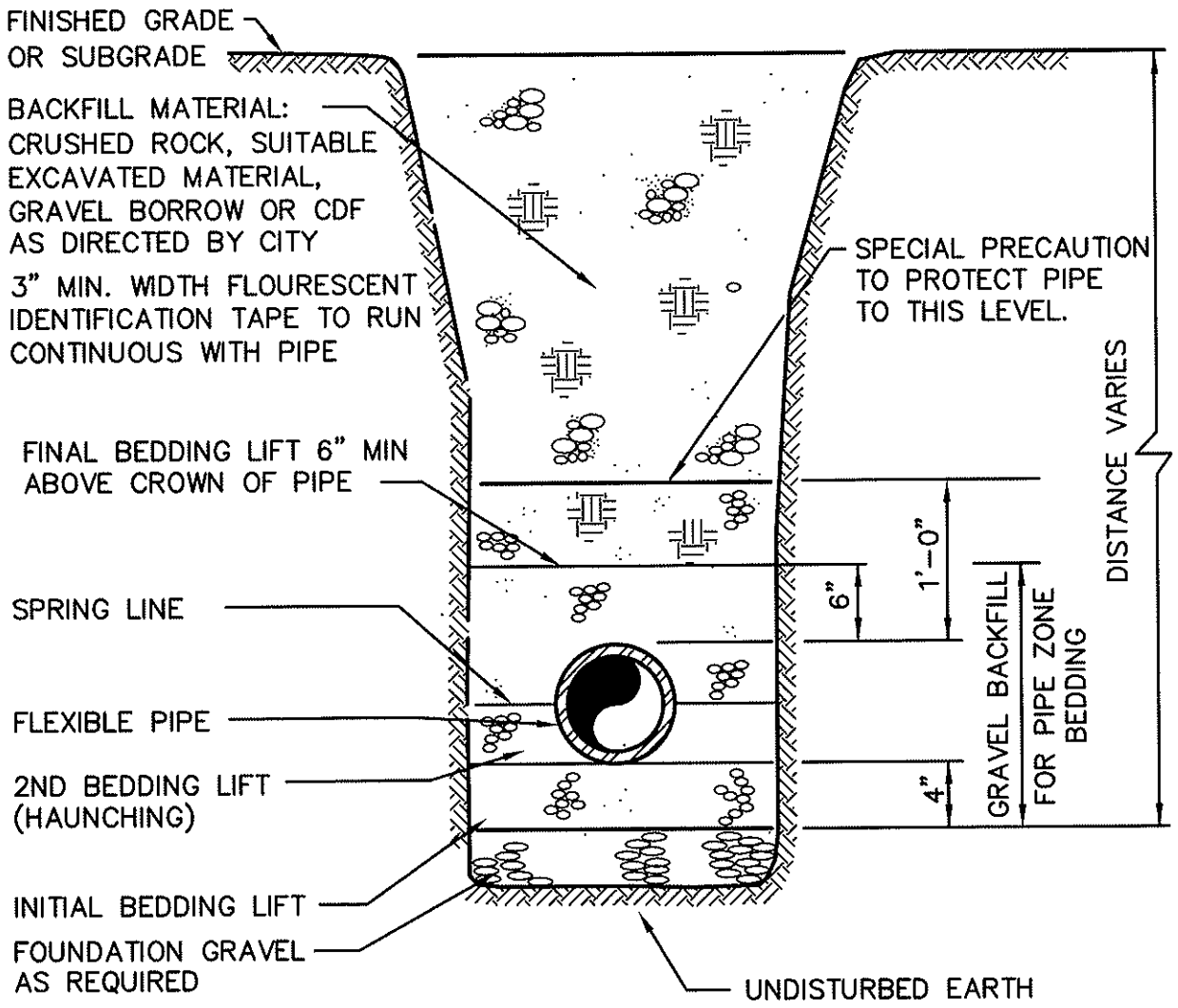

NOTE:

BACKFILL MATERIAL AND COMPACTION SHALL BE IN CONFORMANCE WITH CITY STANDARDS AND/OR THE STATE OR COUNTY PERMIT REQUIREMENTS (AS MAY BE APPLICABLE);

MINIMUM REQUIREMENTS:
ALL GRANULAR BACKFILL SHALL BE COMPACTED TO 95% MODIFIED PROCTOR, ASTM D1557

CITY OF GRANITE FALLS			
TRENCH SECTION FOR FLEXIBLE PIPE			
APPROVED: Warren W. Hakkinen 4/10/08 BY CITY DATE			DWG. NO. SSTSFLEXP
DATE: 3/2008	DRWN: M.S.	CHKD: W.P.	SCALE: NONE

L:\GRFALLS\0031I STD DETAILS\STANDARDS\SSTSFLEXP.DWG, LAYOUT1, 3/24/2008 5:15:13 PM, 1:1, BY: PERKLINS W

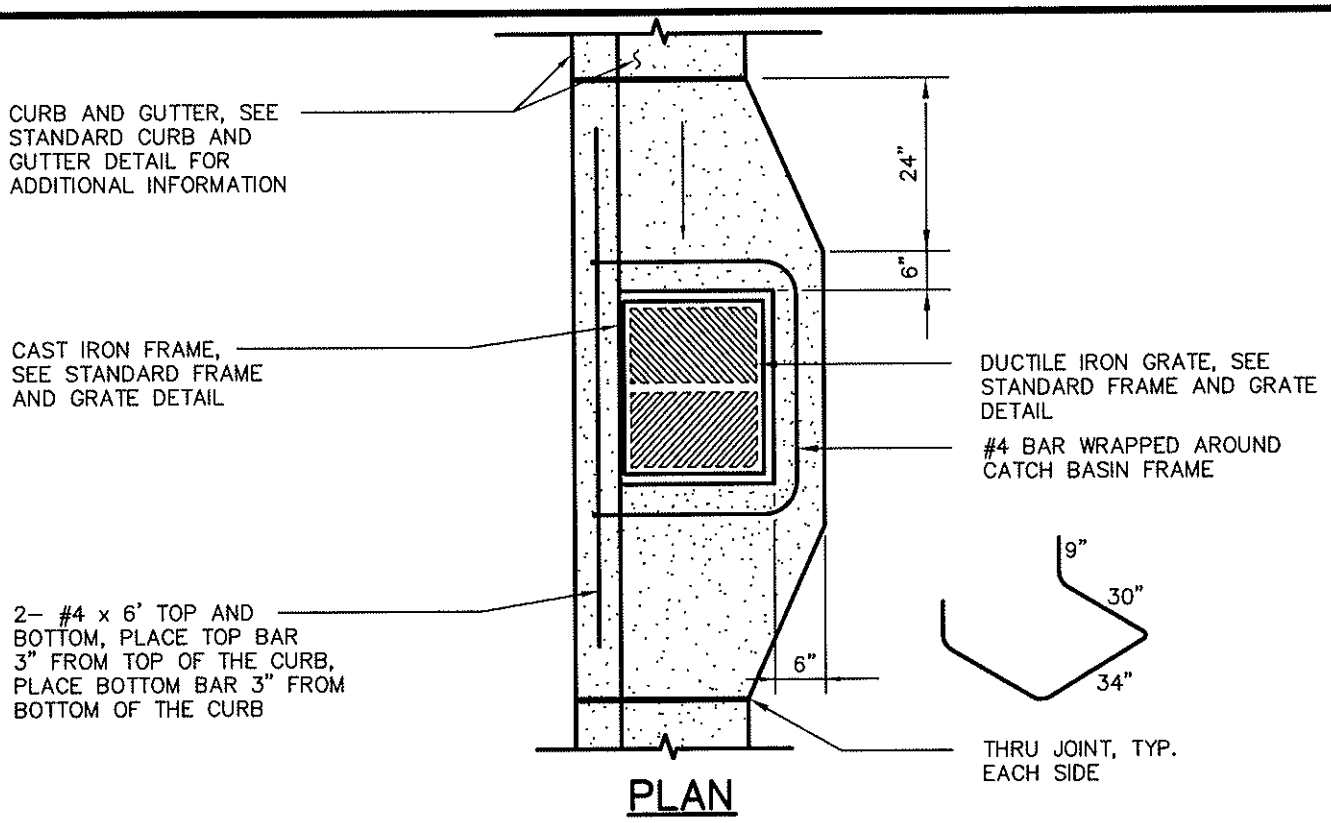

PLAN

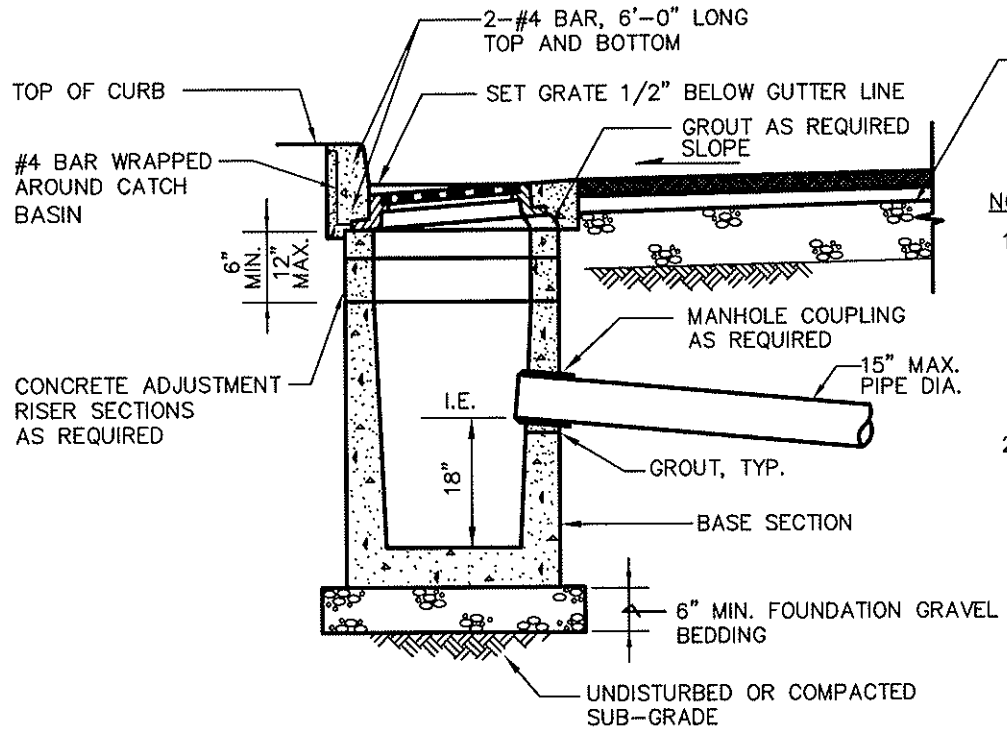

NOTES:

1. CATCH BASINS SHALL BE SPACED PER MINIMUM CITY DESIGN STANDARDS
2. TYPE I CATCH BASIN IS USED FOR DEPTHS LESS THAN 5'-0" FROM THE TOP OF THE GRATE TO I.E. (INVERT)

ELEVATION

CATCH BASIN TYPE I

CITY OF GRANITE FALLS			
CATCH BASIN TYPE I			
APPROVED: Warren W. Perkins 4/10/08 BY CITY DATE			DWG. NO. CB-1
DATE: 3/2008	DRWN: M.S.	CHKD: W.P.	SCALE: NONE

L:\GRFALLS\0031I STD DETAILS\STANDARDS\CB-1.DWG, LAYOUT1, 3/24/2008 5:16:41 PM, 1:1, BY: PERKLINS W

NOTES:

1. CATCH BASINS SHALL BE CONSTRUCTED IN ACCORDANCE WITH ASTM C478 (AASHTO M199) AND ASTM C890 UNLESS OTHERWISE SHOWN ON PLANS OR NOTED IN THE STANDARD SPECIFICATIONS.
2. HANDHOLDS IN ADJUSTMENT SECTION SHALL HAVE 3" MIN. CLEARANCE. STEPS IN CATCH BASIN SHALL HAVE 6" MIN. CLEARANCE. CATCH BASIN DETAILS. HANDHOLDS SHALL BE PLACED IN ALTERNATING GRADE RINGS OR LEVELING BRICK COURSE WITH A MIN. OF ONE HANDHOLD BETWEEN THE LAST STEP AND TOP OT THE FINISHED GRADE.
3. ALL REINFORCED CAST-IN-PLACE CONCRETE SHALL BE CLASS 4000. ALL PRECAST CONCRETE SHALL BE CLASS 4000.
4. PRECAST BASES SHALL BE FURNISHED WITH CUTOUTS OR KNOCKOUTS. KNOCKOUTS SHALL HAVE WALL THICKNESS OF 2" MIN. UNUSED KNOCKOUTS NEED NOT BE GROUTED IF WALL IS LEFT INTACT. PIPES SHALL BE INSTALLED ONLY IN FACTORY KNOCKOUTS UNLESS OTHERWISE APPROVED BY THE ENGINEER.
5. KNOCKOUT OR CUTOUT HOLE SIZE SHALL EQUAL PIPE OUTER DIAM. PLUS CATCH BASIN WALL THICKNESS. MAX. HOLE SIZE SHALL BE 36" FOR 48" CATCH BASIN, 42" FOR 54" C.B., 48" FOR 60" C.B., 60" FOR 72" C.B., 84" FOR 96" C.B. MIN. DISTANCE BETWEEN HOLES SHALL BE 8" FOR 48", 54", AND 60" C.B.; 12" FOR 72" AND 96" C.B.
6. CATCH BASIN FRAMES AND GRATES OR COVERS SHALL BE IN ACCORDANCE WITH SEC. 7.05 OF THE STANDARD SPECIFICATIONS. MATING SURFACES SHALL BE FINISHED TO ASSURE NON-ROCKING FIT WITH ANY COVER POSITION.
7. ALL BASE REINFORCING STEEL SHALL HAVE A MIN. YIELD STRENGTH OF 60,000 PSI AND BE PLACED IN THE UPPER HALF OF THE BASE WITH 1" MIN. CLEARANCE.
8. MIN. SOIL BEARING VALUE SHALL EQUAL 3,300 POUNDS PER SQUARE FOOT.
9. FOR DETAILS SHOWING LADDER, STEPS, HANDRAILS AND TOP SLABS, SEE OTHER STANDARD DETAILS.
10. SEE THE STANDARD SPECIFICATIONS SEC. 7-05.3 FOR JOINT REQUIREMENTS.

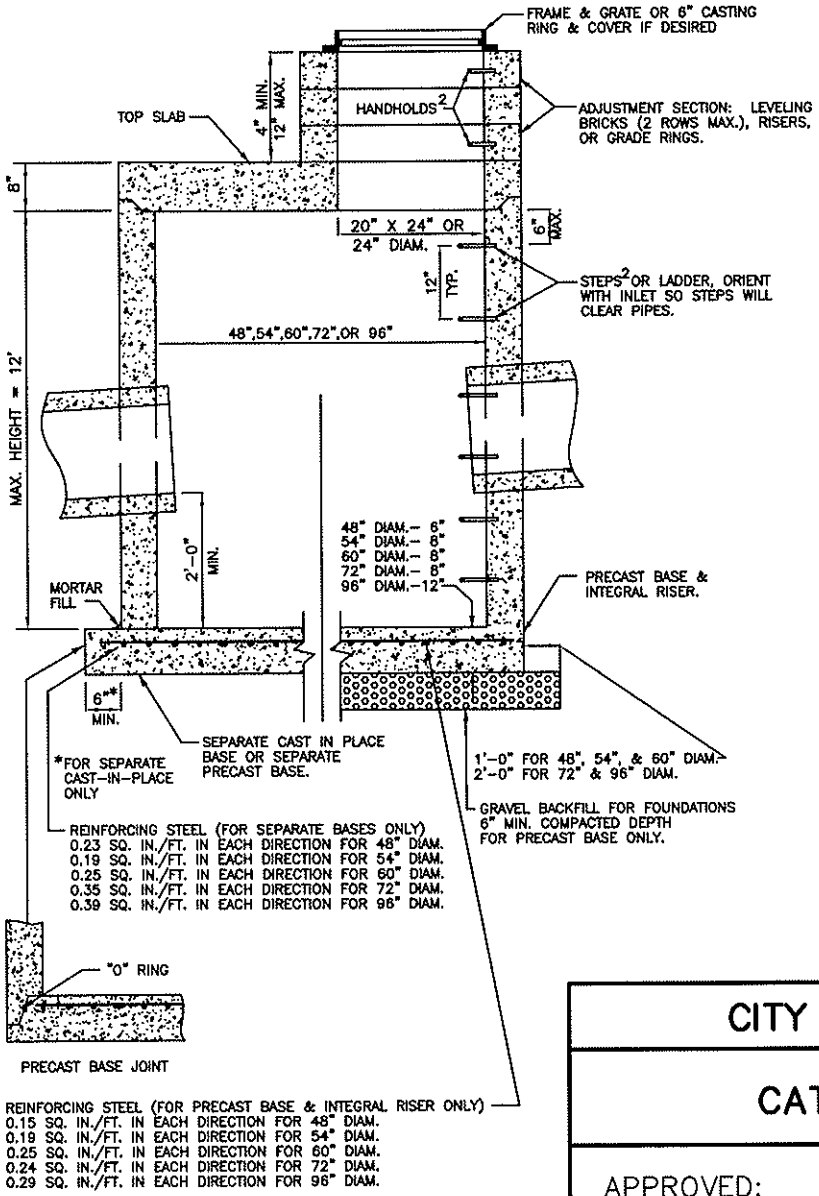

CITY OF GRANITE FALLS			
CATCH BASIN TYPE II			
APPROVED: Warren W. Perkins 4/10/08 BY CITY DATE			DWG. NO. CB-TP2
DATE: 3/2008	DRWN: M.S.	CHKD: W.P.	SCALE: NONE

L:\GRFALLS\00311 STD DETAILS\STANDARDS\CB-TP2.DWG, LAYOUT1, 3/24/2008 5:21:20 PM, 1:1, BY: PERKLINS W

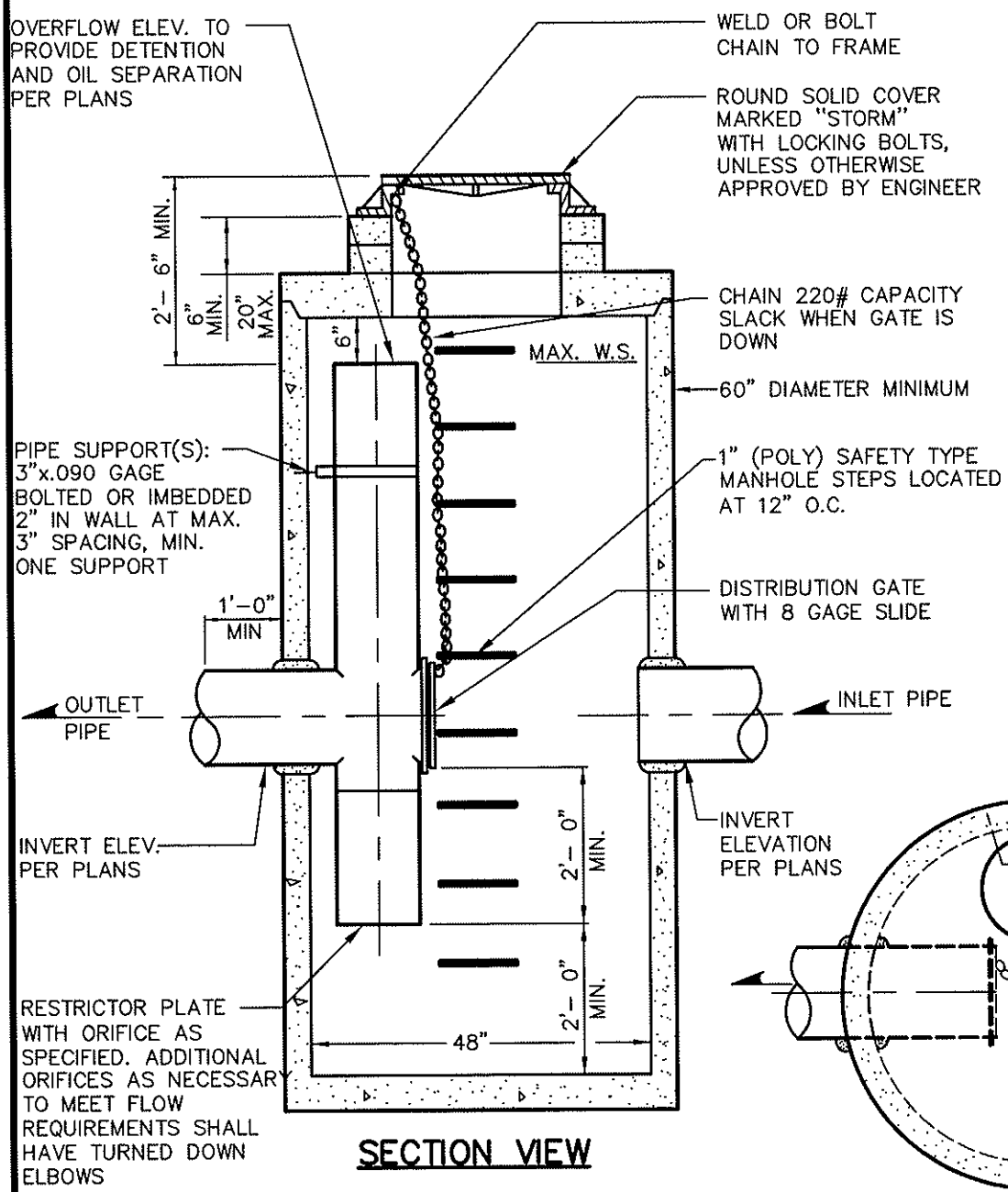

SECTION VIEW

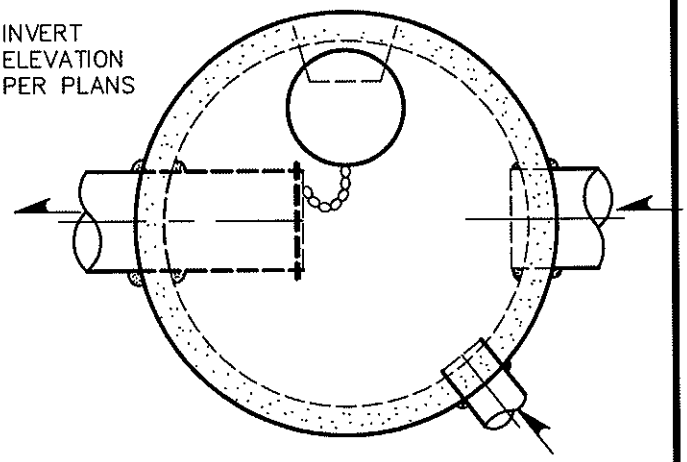

PLAN VIEW

FLOW RESTRICTOR CATCH BASIN TYPE 2

NOTES:

1. PIPE SIZES AND SLOPES: PER APPROVED PLANS
2. OUTLET CAPACITY: NOT LESS THAN COMBINED INLETS
3. METAL PARTS: CORROSION RESISTANT. GALVANIZED PIPE PARTS TO HAVE ASPHALT TREATMENT 1
4. FRAME AND LADDER OR STEPS OFFSET SO:
   A. CLEANOUT GATE IS VISIBLE FROM TOP
   B. CLIMB–DOWN SPACE IS CLEAR OF RISER AND CLEANOUT GATE
   C. FRAME IS CLEAR OF CURB
5. IF METAL OUTLET PIPE CONNECTS TO CEMENT CONCRETE PIPE: OUTLET PIPE TO HAVE SMOOTH O.D. EQUAL TO CONCRETE PIPE I.D. LESS 1/4"

CITY OF GRANITE FALLS			
FLOW RESTRICTOR CATCH BASIN TYPE 2			
APPROVED: Warren W. Perkins 4/10/08 BY CITY DATE			DWG. NO. CB–2
DATE: 3/2008	DRWN: M.S.	CHKD: W.P.	SCALE: NONE

L:\GRFALLS\00311 STD DETAILS\STANDARDS\CB-2.DWG, LAYOUT1, 3/24/2008 5:17:46 PM, 1:1, BY: PERKLINS W

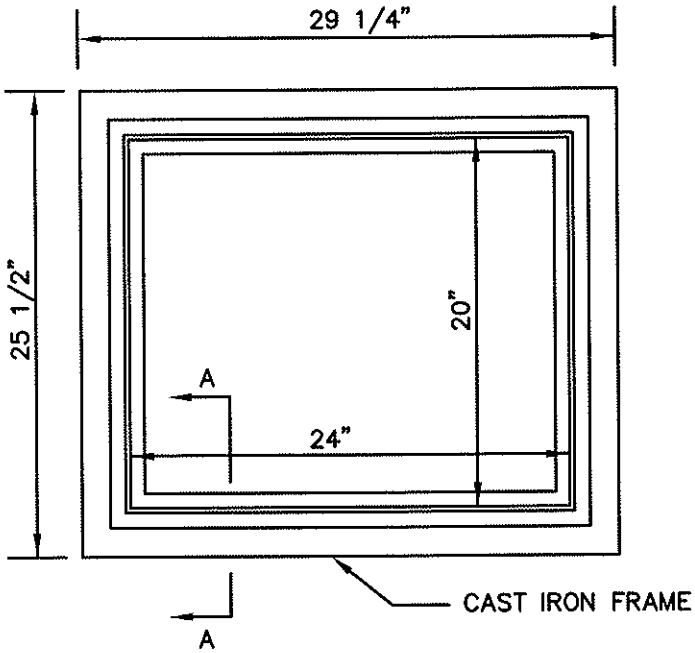

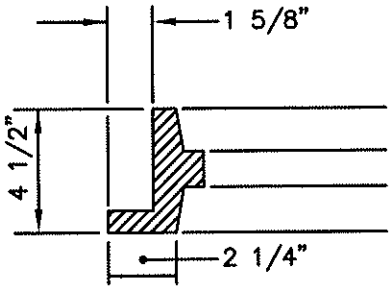

SECTION A–A

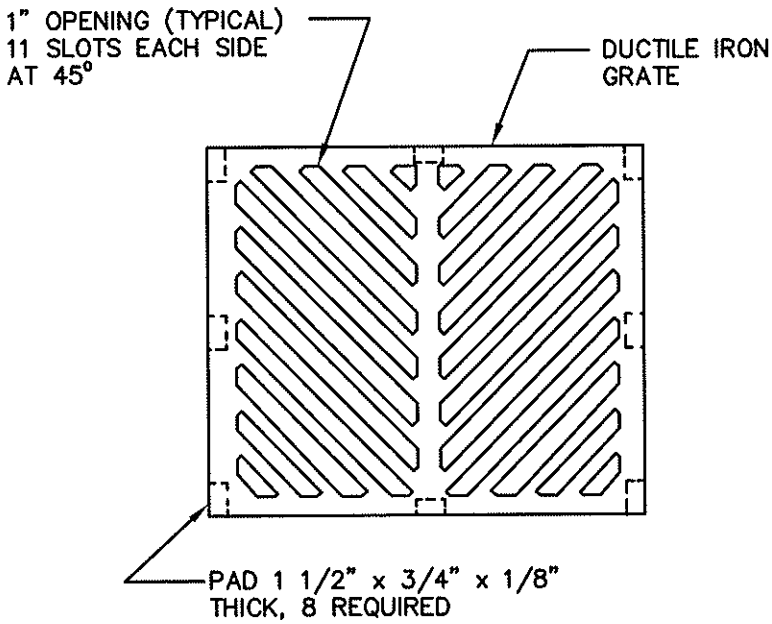

NOTES:

1. MATERIAL SHALL CONFORM TO THE STANDARD SPECIFICATIONS PREPARED BY THE WASHINGTON STATE DEPARTMENT OF TRANSPORTATION AND AMERICAN PUBLIC WORKS ASSOCIATION, WASHINGTON CHAPTER

2. WHEN ROAD PROFILE, EXCEED 6% "VANED" GRATES SHALL BE INSTALLED IN LIEU OF THE STANDARD FRAME AND GRATE, AT THE DISCRETION OF THE CITY

CITY OF GRANITE FALLS			
CATCH BASIN FRAME AND GRATE			
APPROVED: Warren W. Valkins 4/10/08 BY CITY DATE			DWG. NO. STOM–3
DATE: 3/2008	DRWN: M.S.	CHKD: W.P.	SCALE: NONE

L:\GRFALLS\00311 STD DETAILS\STANDARDS\STOM-3.DWG, LAYOUT1, 3/24/2008 5:22:36 PM, 1:1, BY: PERKLINS W

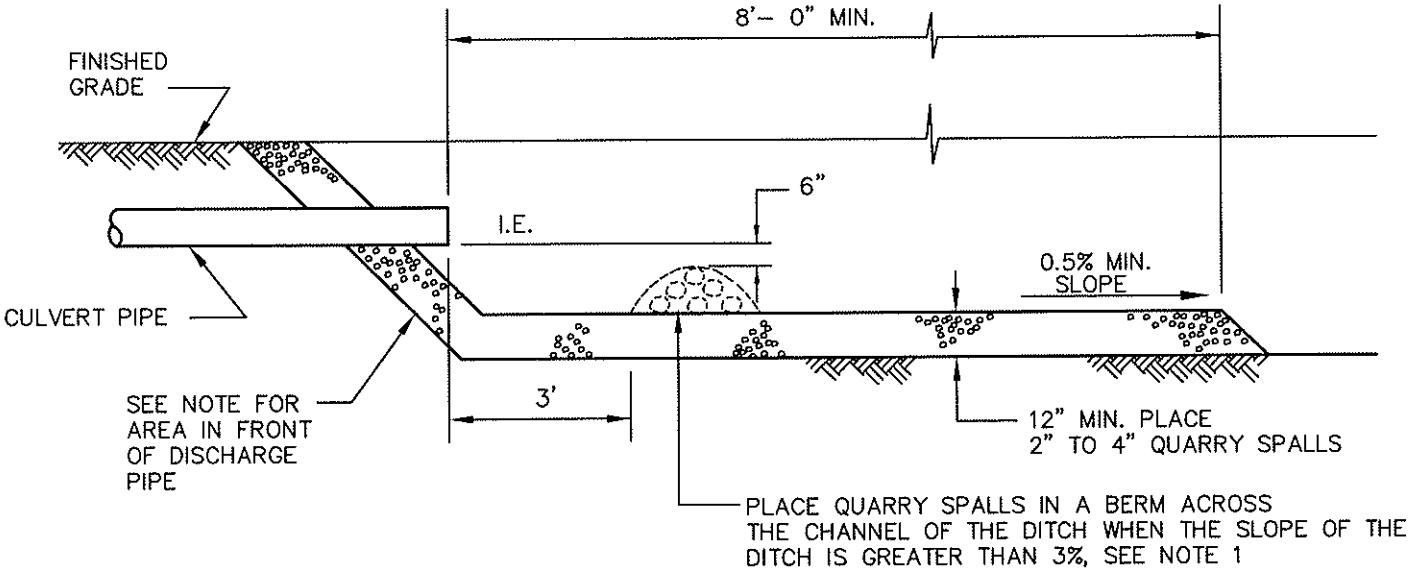

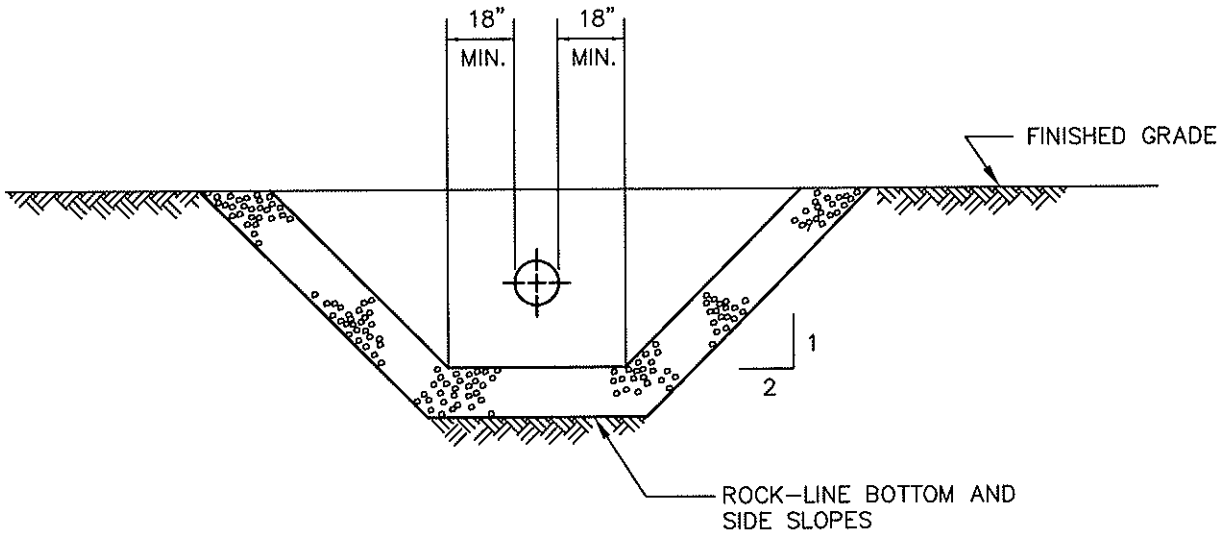

NOTES:

1. PLACE QUARRY SPALLS IN FRONT OF CULVERT DISCHARGE, ENGINEER SHALL SIZE QUARRY SPALL BERM

RIPRAP AND ENERGY DISSIPATION FOR DITCH

CITY OF GRANITE FALLS			
RIPRAP AND ENERGY DISSIPATION FOR DITCH			
APPROVED: Warren V. Vaden 4/10/08 BY CITY DATE			DWG. NO. DTCH–2
DATE: 3/2008	DRWN: M.S.	CHKD: W.P.	SCALE: NONE

L:\GRFALLS\00311 STD DETAILS\STANDARDS\DTCH-2.DWG, LAYOUT1, 3/24/2008 5:24:42 PM, 1:1, BY: PERKLINS W

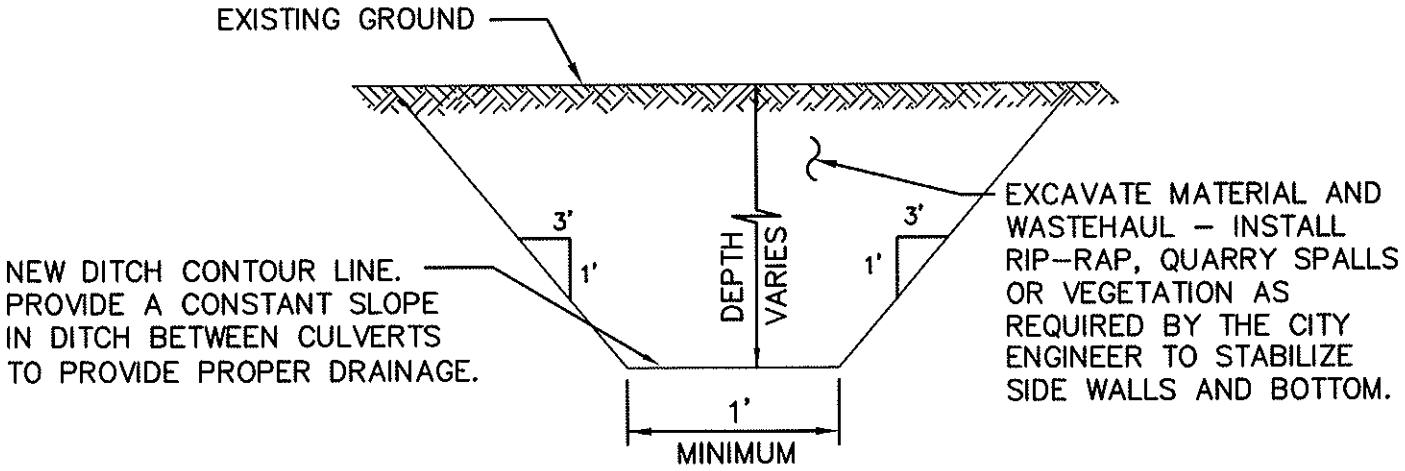

CITY OF GRANITE FALLS			
NEW DITCH CONSTRUCTION			
APPROVED: Warren W. Vakim 4/10/08 BY CITY DATE			DWG. NO. STOM–5
DATE: 3/2008	DRWN: M.S.	CHKD: W.P.	SCALE: NONE

L:\GRFALLS\00311 STD DETAILS\STANDARDS\STOM-5.DWG, LAYOUT1, 3/24/2008 5:27:48 PM, 1:1, BY: PERKLINS W

Sanitary Sewer Details

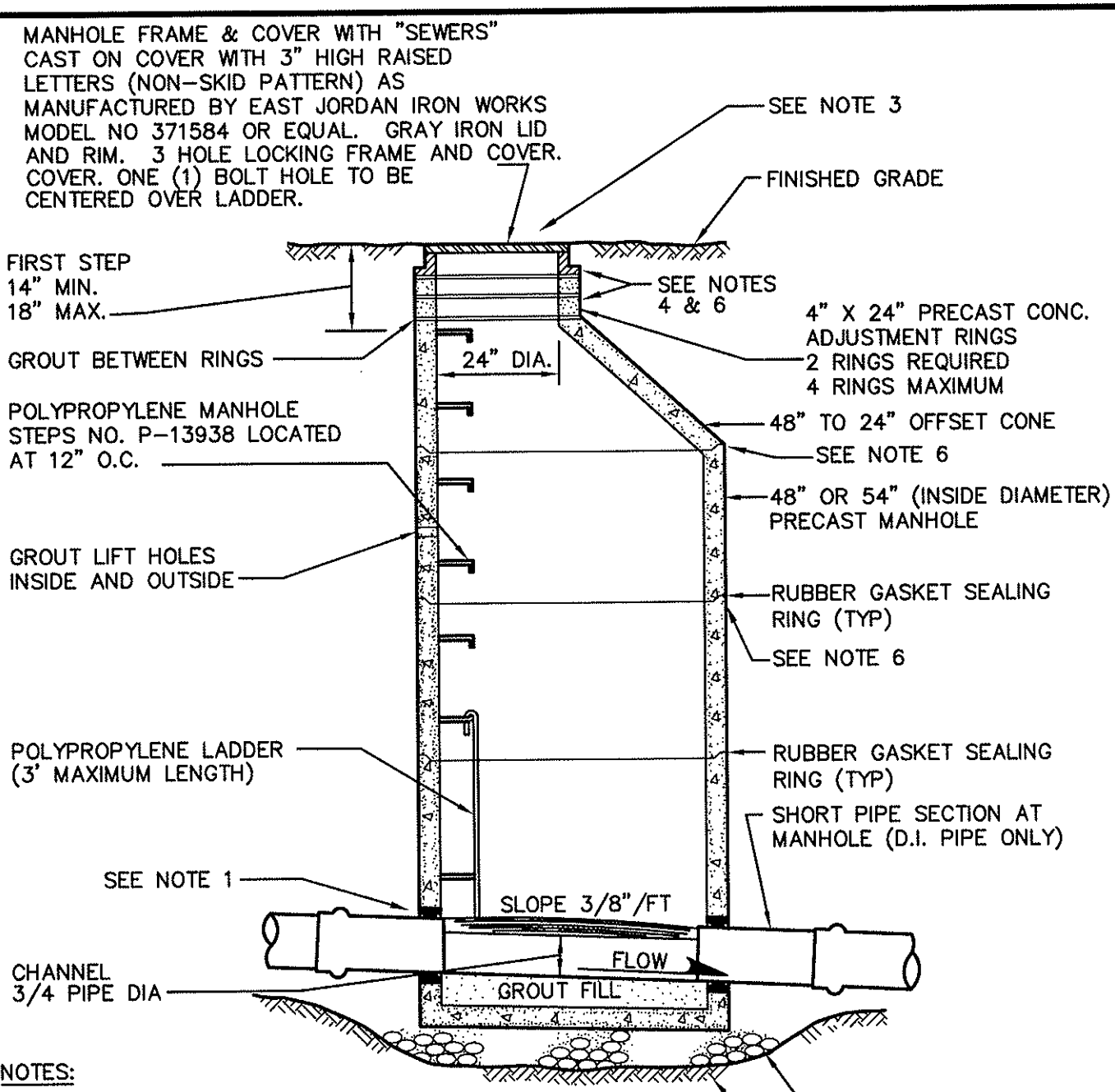

NOTES:

1. PIPE CONNECTIONS TO MANHOLES SHALL BE AS FOLLOWS:
   PVC PIPE: CAST OR GROUT A MANHOLE COUPLING INTO WALL.
   D.I. PIPE: BELL AND SPIGOT JOINT OR FLEXIBLE COUPLING JOINT DIST FROM MANHOLE WALL; PVC 5 F, DI 1 FT.
   PVC AND D.I. PIPE, OPTIONAL: CORE THE MANHOLE AND CONNECT SEWER PIPE WITH A WATER TIGHT FLEXIBLE RUBBER BOOT IN MANHOLE WALL, KOR-N-SEAL BOOT OR EQUAL.
2. DROP OF GRADE THRU MANHOLE SHALL BE 0.10' (SLOPE=3/8"/FT) (48" MANHOLE) UNLESS OTHERWISE APPROVED BY CITY INSPECTOR.
3. LARGER MANHOLES WILL BE REQUIRED AT THE DISCRETION OF THE CITY ENGINEER BASED ON PIPE SIZE, NUMBER AND ORIENTATION OF PIPE(S).
4. CONCRETE COLLAR IF OUTSIDE PAVED AREA.
5. PRE-CHANNELED MANHOLE ARE NOT ACCEPTABLE.
6. THE INSIDE AND OUTSIDE OF ALL JOINTS SHALL BE THOROUGHLY COATED WITH NON-SHRINK GROUT (THOROC OR EQUAL) TO BE APPLIED ACCORDING TO MANUFACTURERS SPECIFICATIONS.

CITY OF GRANITE FALLS			
TYPICAL PRECAST MANHOLE			
APPROVED: Warren W. Perkins 4/10/08 BY CITY DATE			DWG. NO. TPMH
DATE: 3/2008	DRWN: M.S.	CHKD: W.P.	SCALE: NONE

L:\GRFALLS\00311 STD DETAILS\STANDARDS\TPMH.DWG, LAYOUT2, 3/13/2008 8:07:10 AM, 1:1, BY: PERKLINS W

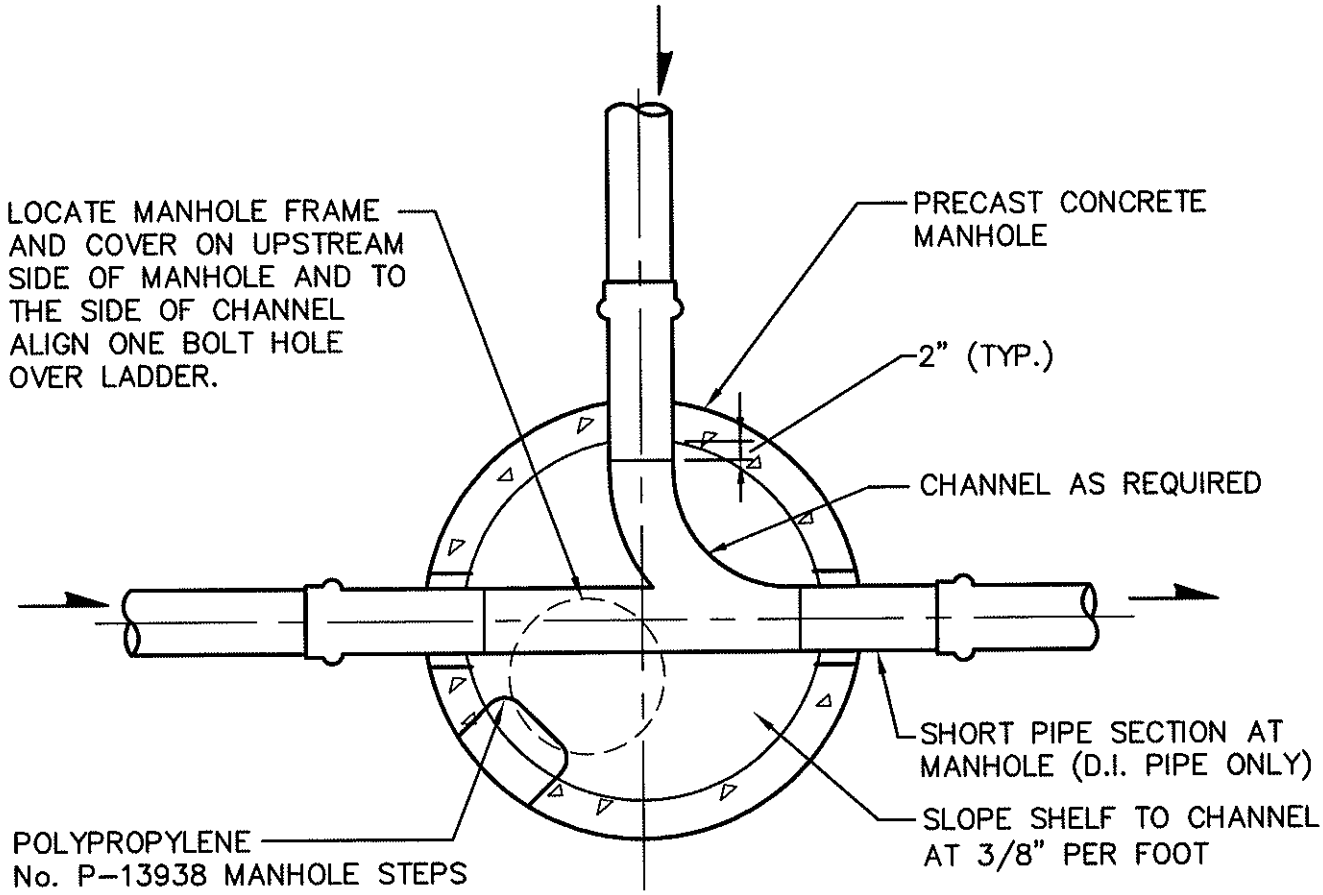

NOTES:

1. PIPE CONNECTIONS TO MANHOLES SHALL BE AS FOLLOWS:

   PVC PIPE: CAST OR GROUT A MANHOLE COUPLING INTO WALL
   D.I. PIPE: BELL AND SPIGOT JOINT OR FLEXIBLE COUPLING

2. EITHER SHALL BE 12" MAXIMUM DISTANCE FROM MANHOLE WALL.

3. PVC AND D.I. (OPTION):

   CORE THE MANHOLE AND CONNECT SEWER PIPE WITH A WATER TIGHT FLEXIBLE RUBBER BOOT IN MANHOLE WALL, KOR-N-SEAL BOOT OR EQUAL.

4. ALL CONNECTIONS TO EXISTING MANHOLES SHALL BE MADE WITH A CONCRETE CORING MACHINE UNLESS OTHERWISE APPROVED BY THE CITY.

CITY OF GRANITE FALLS			
TYPICAL MANHOLE PLAN VIEW			
APPROVED: Warren W. Perkins 4/10/08 BY CITY DATE			DWG. NO. TMHP
DATE: 3/2008	DRWN: M.S.	CHKD: W.P.	SCALE: NONE

L:\GRFALLS\0031I STD DETAILS\STANDARDS\TMHP.DWG, LAYOUT1, 3/24/2008 5:31:19 PM, 1:1, BY: PERKLINS W

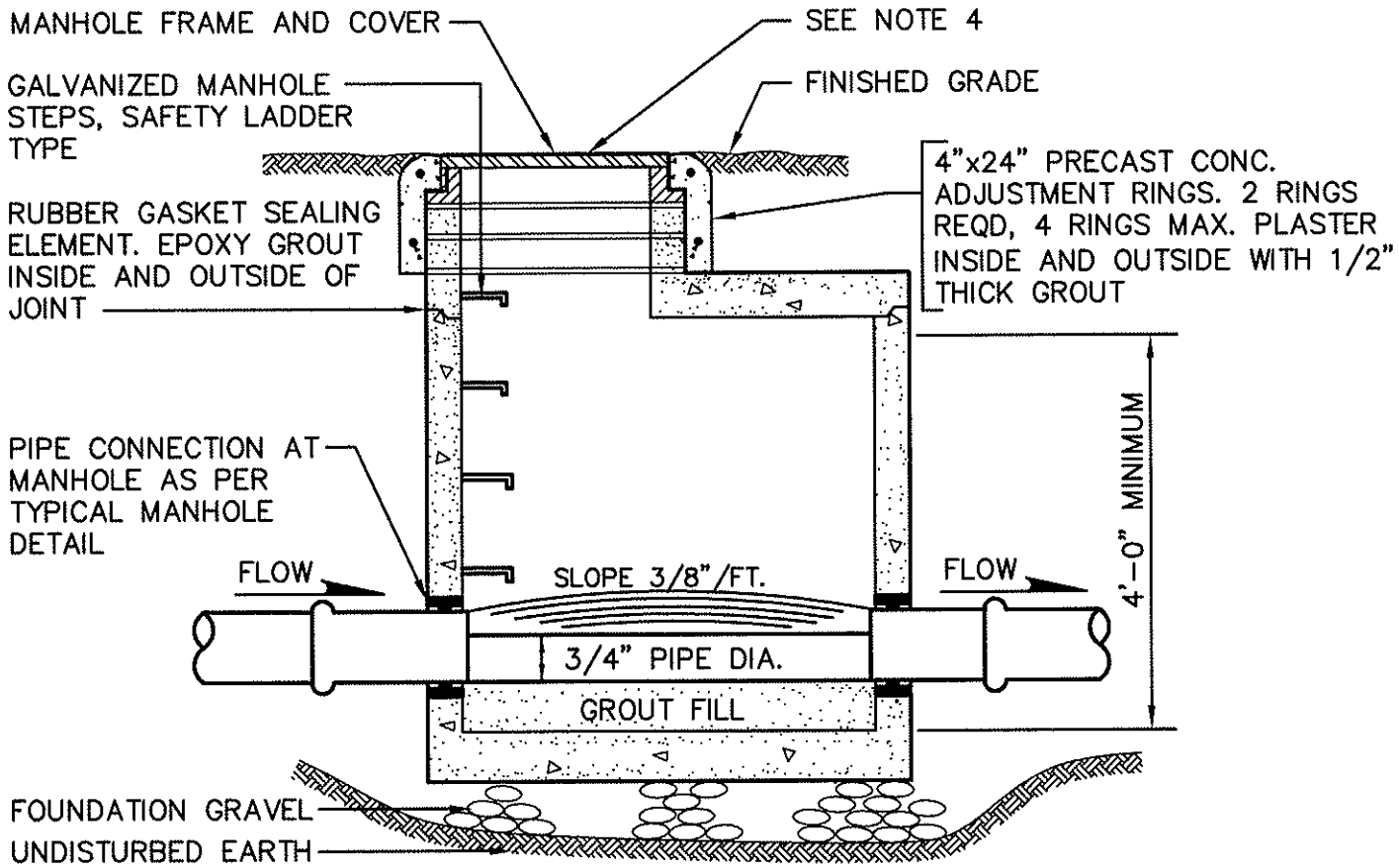

NOTES:

1. PIPE CONNECTIONS TO MANHOLES SHALL BE AS FOLLOWS:
   PVC PIPE: CAST OR GROUT A MANHOLE COUPLING INTO WALL.
   D.I. PIPE: BELL AND SPIGOT JOINT OR FLEXIBLE COUPLING JOINT DIST FROM MANHOLE WALL; PVC 5 F, DI 1 FT.
   PVC AND D.I. PIPE, OPTIONAL: CORE THE MANHOLE AND AND CONNECT SEWER PIPE WITH A WATER TIGHT FLEXIBLE RUBBER BOOT IN MANHOLE WALL, KOR-N-SEAL BOOT OR EQUAL.
   ALL CONNECTIONS TO EXISTING MANHOLES SHALL BE MADE WITH A CONCRETE CORING MACHINE UNLESS OTHERWISE APPROVED BY THE CITY.
2. DROP OF GRADE THRU MANHOLE SHALL BE 0.10'.
3. PRE-CHANNELED MANHOLES ARE NOT ACCEPTABLE.
4. CONSTRUCT CONCRETE COLLARS PER DETAILS. MANHOLE RIM AND LID PER TYPICAL PRECAST MANHOLE DETAIL.

CITY OF GRANITE FALLS			
TYPICAL SHALLOW PRECAST MANHOLE			
APPROVED: Warren L. Perkins 4/10/08 BY CITY DATE			DWG. NO. TS-PMH
DATE: 3/2008	DRWN: M.S.	CHKD: W.P.	SCALE: NONE

L:\GRFALLS\00311 STD DETAILS\STANDARDS\TS-PMH.DWG, LAYOUT2, 3/13/2008 7:02:30 AM, 1:1, BY: PERKLINS W

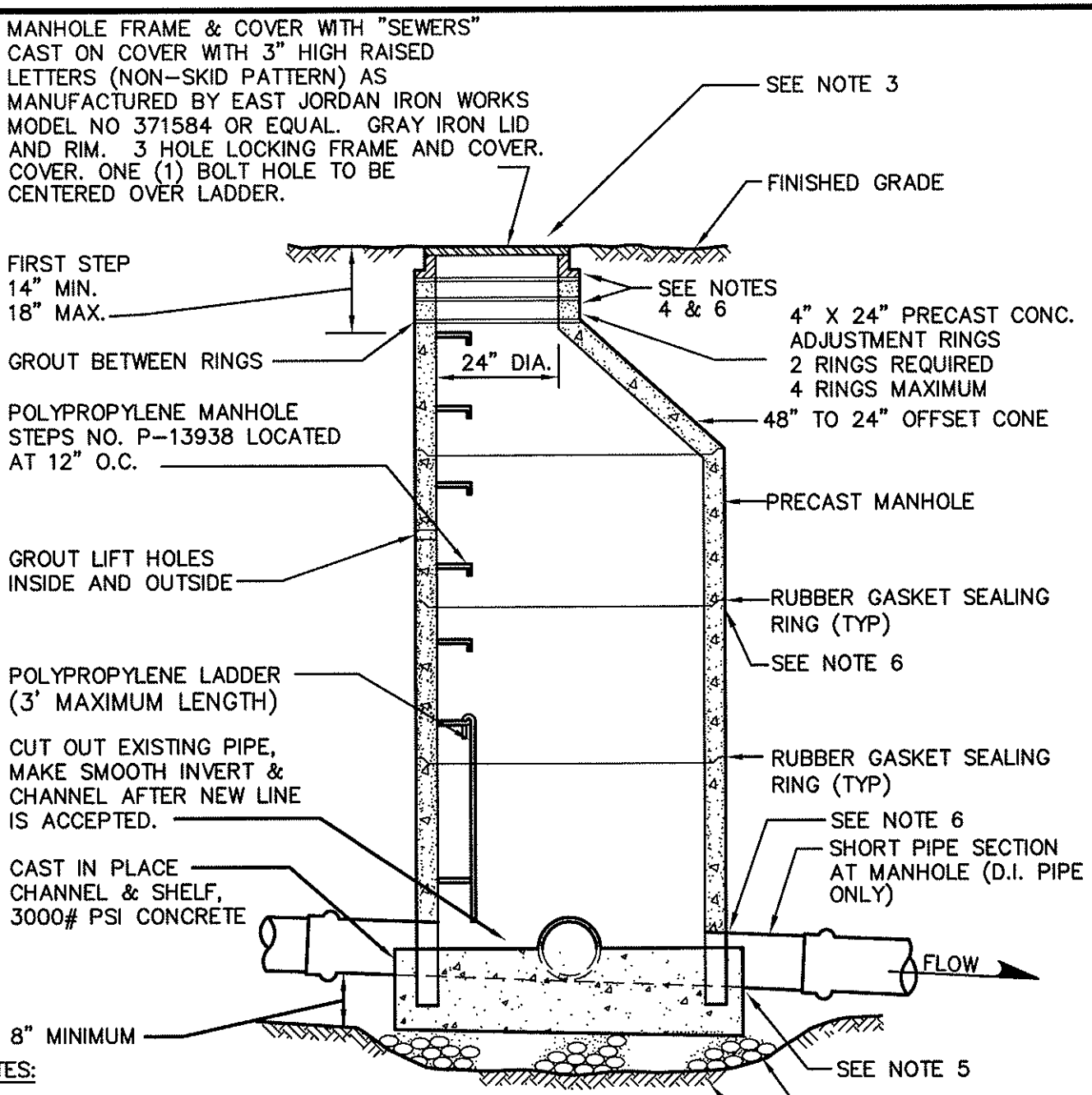

NOTES:

1. PIPE CONNECTIONS TO MANHOLES SHALL BE AS FOLLOWS:
   PVC PIPE: CAST OR GROUT A MANHOLE COUPLING INTO WALL.
   D.I. PIPE: BELL AND SPIGOT JOINT OR FLEXIBLE COUPLING JOINT DIST FROM MANHOLE WALL; PVC 5 F, DI 1 FT.
   PVC AND D.I. PIPE, OPTIONAL: CORE THE MANHOLE AND CONNECT SEWER PIPE WITH A WATER TIGHT FLEXIBLE RUBBER BOOT IN MANHOLE WALL, KOR-N-SEAL BOOT OR EQUAL.
2. DROP OF GRADE THRU MANHOLE SHALL BE 0.10' (SLOPE=3/8"/FT) (48" MANHOLE) UNLESS OTHERWISE APPROVED BY CITY INSPECTOR.
3. LARGER MANHOLES WILL BE REQUIRED AT THE DISCRETION OF THE CITY ENGINEER BASED ON PIPE SIZE, NUMBER AND ORIENTATION OF PIPE(S).
4. CONCRETE COLLAR IF OUTSIDE PAVED AREA.
5. PRE-CHANNELED MANHOLE ARE NOT ACCEPTABLE.
6. THE INSIDE AND OUTSIDE OF ALL JOINTS SHALL BE THOROUGHLY COATED WITH NON-SHRINK GROUT (THOROC OR EQUAL) TO BE APPLIED ACCORDING TO MANUFACTURERS SPECIFICATIONS.

CITY OF GRANITE FALLS			
TYPICAL SADDLE MANHOLE			
APPROVED: Warren N. Perkins 4/10/08 BY CITY DATE			DWG. NO. TSMH
DATE: 3/2008	DRWN: M.S.	CHKD: W.P.	SCALE: NONE

L:\GRFALLS\0031I STD DETAILS\STANDARDS\TSMH.DWG, LAYOUT2, 3/13/2008 8:09:22 AM, 1:1, BY: PERKLINS W

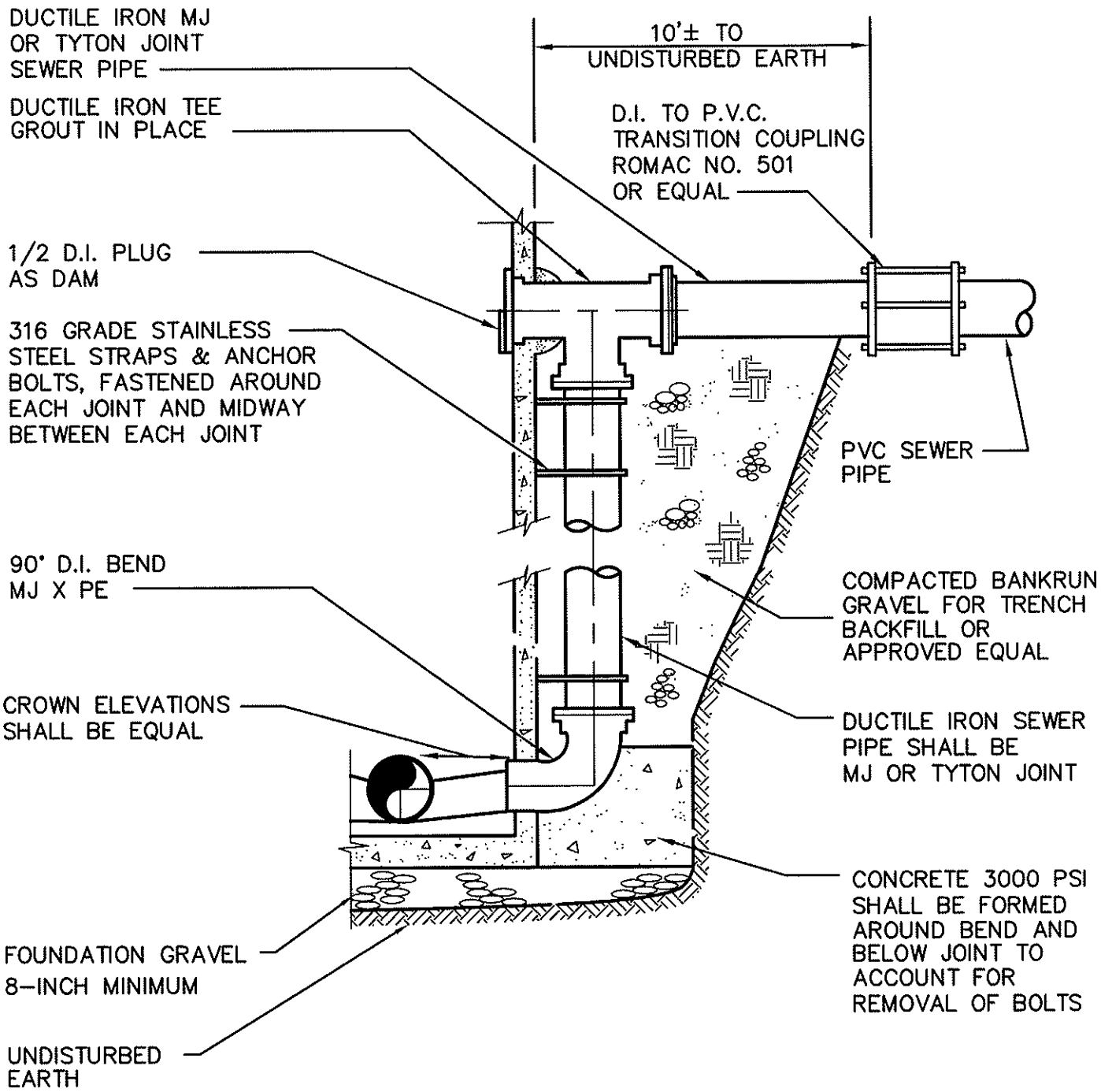

CITY OF GRANITE FALLS			
OUTSIDE DROP MANHOLE			
APPROVED: Warren N. Vaden 4/10/08 BY CITY DATE			DWG. NO. ODMH
DATE: 3/2008	DRWN: M.S.	CHKD: W.P.	SCALE: NONE

L:\GRFALLS\00311 STD DETAILS\STANDARDS\ODMH.DWG, LAYOUT1, 3/24/2008 5:36:54 PM, 1:1, BY: PERKLINS W

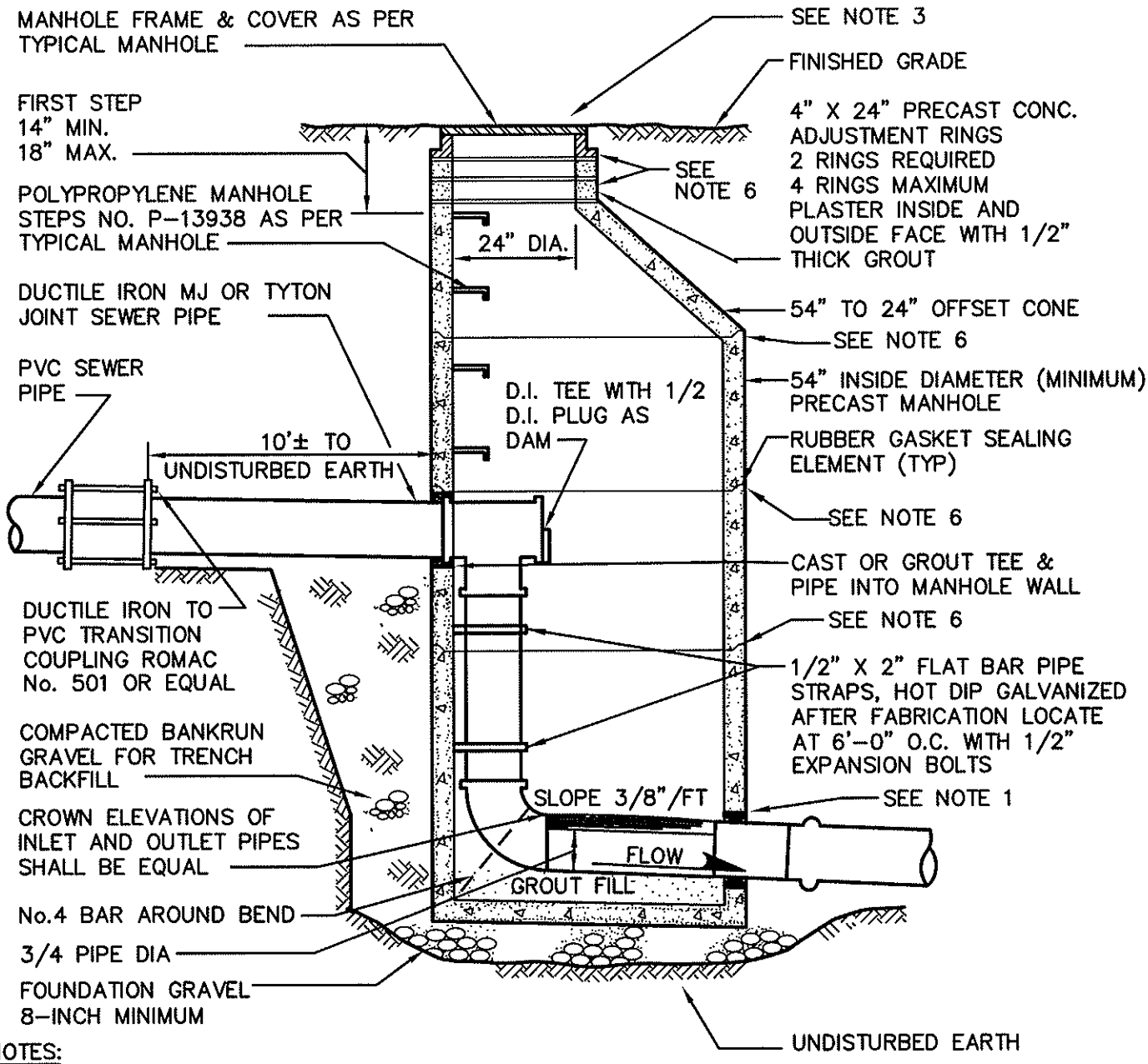

NOTES:

1. PIPE CONNECTIONS TO MANHOLES SHALL BE AS FOLLOWS:
   PVC PIPE: CAST OR GROUT A MANHOLE COUPLING INTO WALL.
   D.I. PIPE: BELL AND SPIGOT JOINT OR FLEXIBLE COUPLING EITHER SHALL BE 12" MAXIMUM DISTANCE FROM MANHOLE WALL.
   PVC AND D.I. PIPE, OPTIONAL: CORE THE MANHOLE AND CONNECT SEWER PIPE WITH A WATER TIGHT FLEXIBLE RUBBER BOOT IN MANHOLE WALL, KOR-N-SEAL BOOT OR EQUAL.
2. DROP OF GRADE THRU MANHOLE SHALL BE 0.10' (SLOPE=3/8"/FT) (48" MANHOLE) UNLESS OTHERWISE APPROVED BY CITY INSPECTOR.
3. LARGER MANHOLES WILL BE REQUIRED AT THE DISCRETION OF THE CITY ENGINEER BASED ON PIPE SIZE, NUMBER AND ORIENTATION OF PIPE(S).
4. INSTALL CONCRETE COLLAR. SEE DETAIL.
5. PRE-CHANNELED MANHOLE ARE NOT ACCEPTABLE.
6. THE INSIDE AND OUTSIDE OF ALL JOINTS SHALL BE THOROUGHLY COATED WITH EPOXY GROUT (THOROC OR EQUAL) TO BE APPLIED ACCORDING TO MANUFACTURERS SPECIFICATIONS.

CITY OF GRANITE FALLS			
INSIDE DROP MANHOLE			
APPROVED: Warren R. Watkins 4/10/08 BY CITY DATE			DWG. NO. IDMH
DATE: 3/2008	DRWN: M.S.	CHKD: W.P.	SCALE: NONE

L:\GRFALLS\00311 STD DETAILS\STANDARDS\IDMH.DWG, LAYOUT2, 3/24/2008 5:53:05 PM, 1:1, BY: PERKLINS W

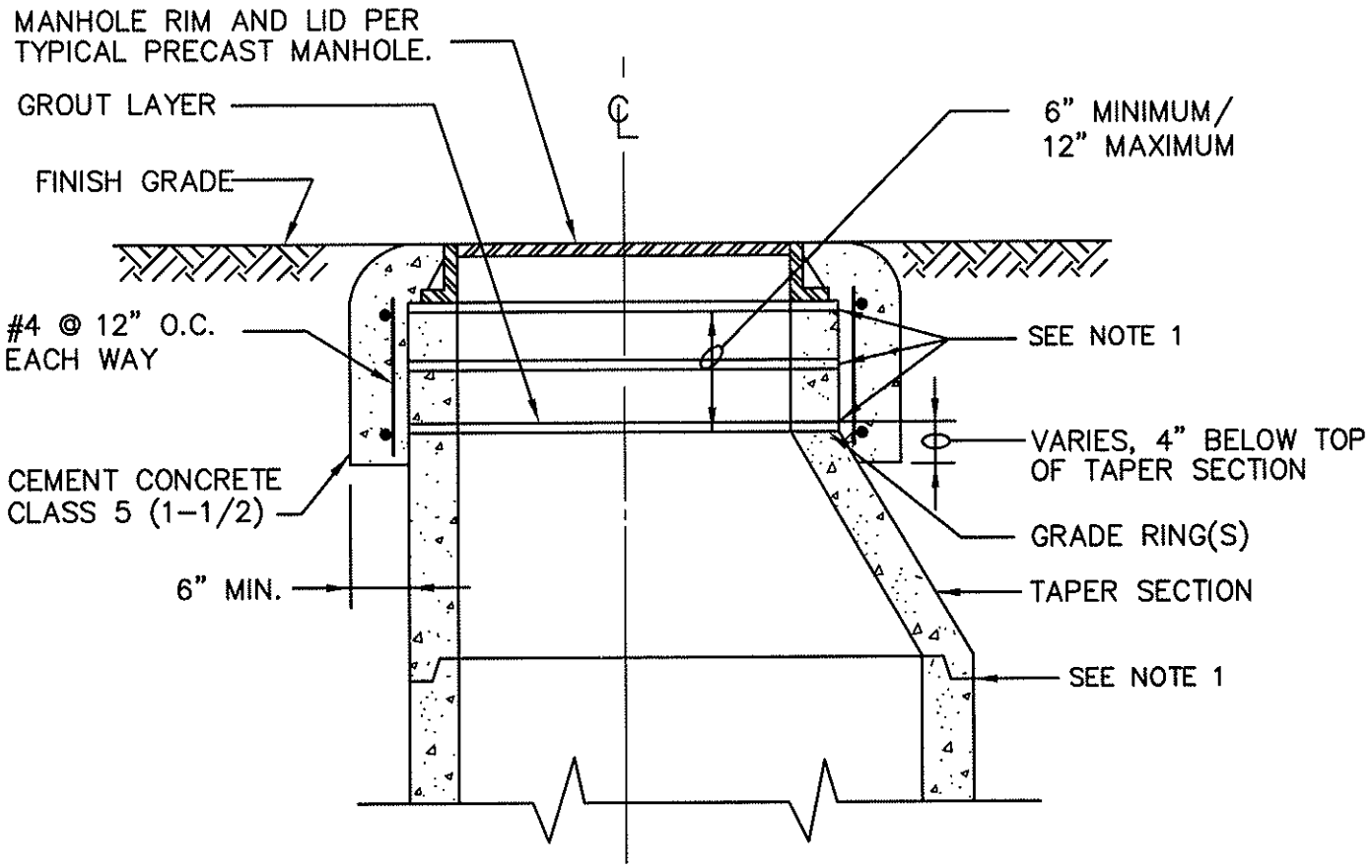

SECTION

NOTE:

CONSTRUCT CONCENTRIC CONCRETE COLLARS AROUND ALL MANHOLE FRAMES LOCATED OUTSIDE OF PAVEMENT AREAS

MANHOLE FRAME COLLAR

NOTE:

1. THE INSIDE AND OUTSIDE OF ALL JOINTS SHALL BE THOROUGHLY COATED WITH EPOXY GROUT (THOROC OR EQUAL) TO BE APPLIED ACCORDING TO MANUFACTURERS SPECIFICATIONS.

CITY OF GRANITE FALLS			
MANHOLE FRAME COLLAR			
APPROVED: Warren W. Perkins 4/10/08 BY CITY DATE			DWG. NO. MHCLAR
DATE: 3/2008	DRWN: M.S.	CHKD: W.P.	SCALE: NONE

L:\GRFALLS\00311 STD DETAILS\STANDARDS\MHCLAR.DWG, LAYOUT2, 3/13/2008 7:06:33 AM, 1:1, BY: PERKLINS W

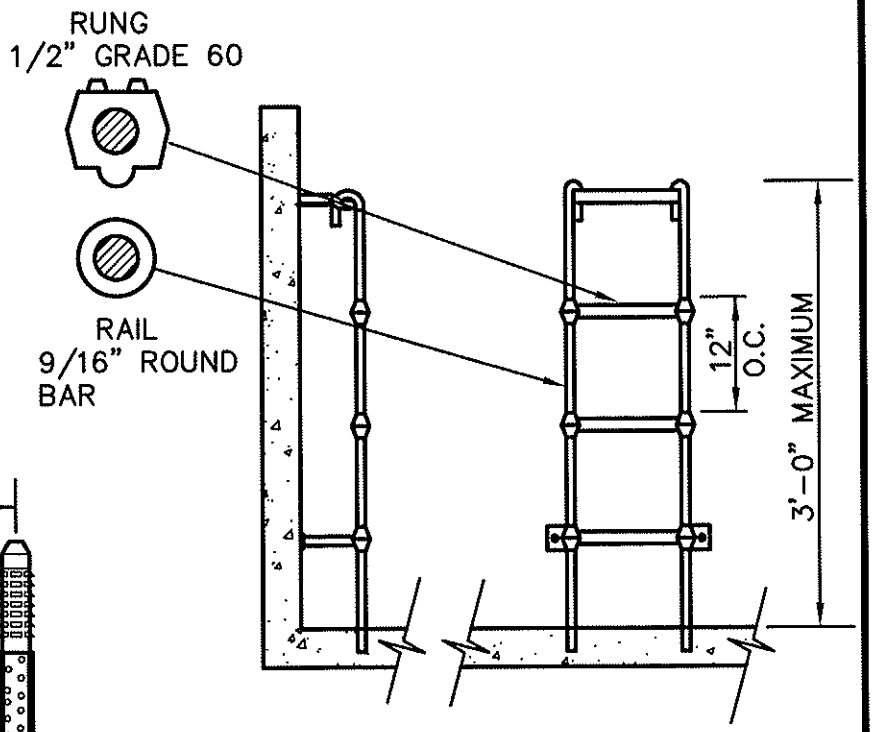

LADDER SHALL CONFORM TO POLYPROPYLENE ASTM D-4101 1/2" GRADE 60 REINFORCING BAR A-615 9/16" COLD DRAWN BAR C-1018

POLYPROPYLENE LADDER

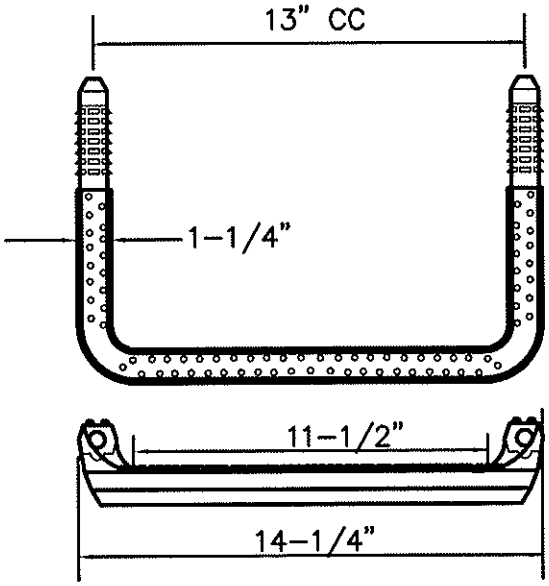

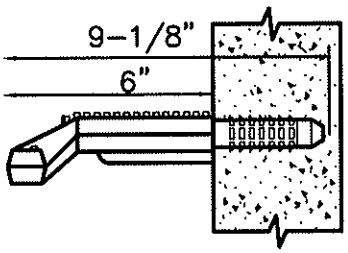

POLYPROPYLENE STEP, LANE NO. P-13938 OR EQUAL

POLYPROPYLENE MANHOLE STEPS

CITY OF GRANITE FALLS			
POLYPROPYLENE LADDER AND MANHOLE STEPS			
APPROVED: Warren W. Perkins 4/10/08 BY CITY DATE			DWG. NO. PLMHS
DATE: 3/2008	DRWN: M.S.	CHKD: W.P.	SCALE: NONE

L:\GRFALLS\00311 STD DETAILS\STANDARDS\PLMHS.DWG, LAYOUT1, 3/24/2008 5:58:02 PM, 1:1, BY: PERKLINS W

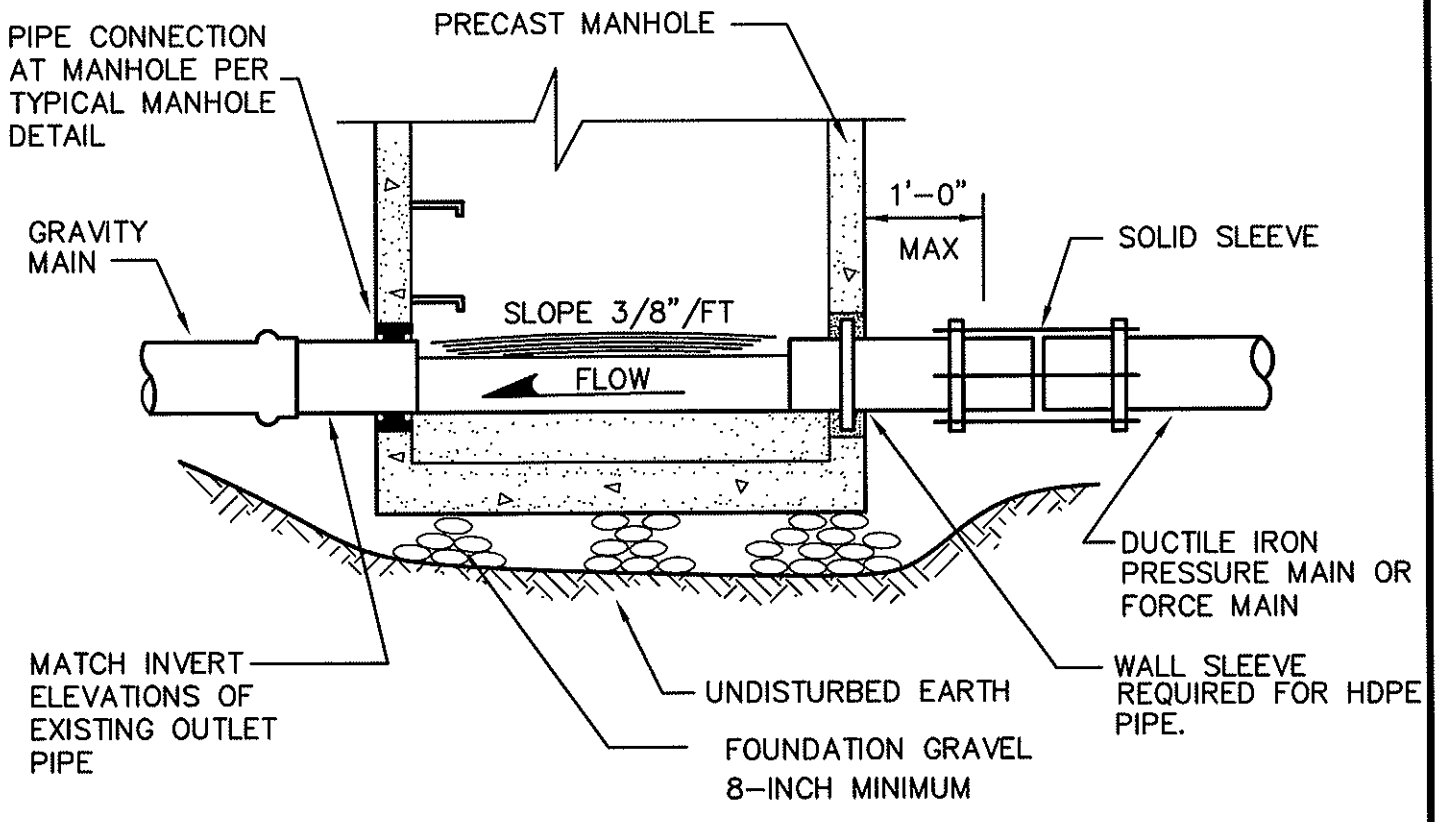

NOTES:

1. PIPE CONNECTIONS TO MANHOLES SHALL BE AS FOLLOWS:
   PVC PIPE: CAST OR GROUT A MANHOLE COUPLING INTO WALL.
   D.I. PIPE: BELL AND SPIGOT JOINT OR FLEXIBLE COUPLING JOINT DIST FROM MANHOLE WALL; PVC 5 F, DI 1 FT.
   PVC AND D.I. PIPE, OPTIONAL: CORE THE MANHOLE AND CONNECT SEWER PIPE WITH A WATER TIGHT FLEXIBLE RUBBER BOOT IN MANHOLE WALL, KOR-N-SEAL BOOT OR EQUAL.
2. DROP OF GRADE THRU MANHOLE SHALL BE 0.10', UNLESS OTHERWISE APPROVED.
3. COATING OF DISCHARGE MANHOLE MAY BE REQUIRED TO PREVENT CORROSION.

CITY OF GRANITE FALLS			
FORCE MAIN DISCHARGE MANHOLE			
APPROVED: Warren W. Perkins 4/10/08 BY CITY DATE			DWG. NO. FMDMH
DATE: 3/2008	DRWN: M.S.	CHKD: W.P.	SCALE: NONE

L:\GRFALLS\00311 STD DETAILS\STANDARDS\FMDMH.DWG, LAYOUT1, 3/25/2008 4:30:36 PM, 1:1, BY: PERKLINS W

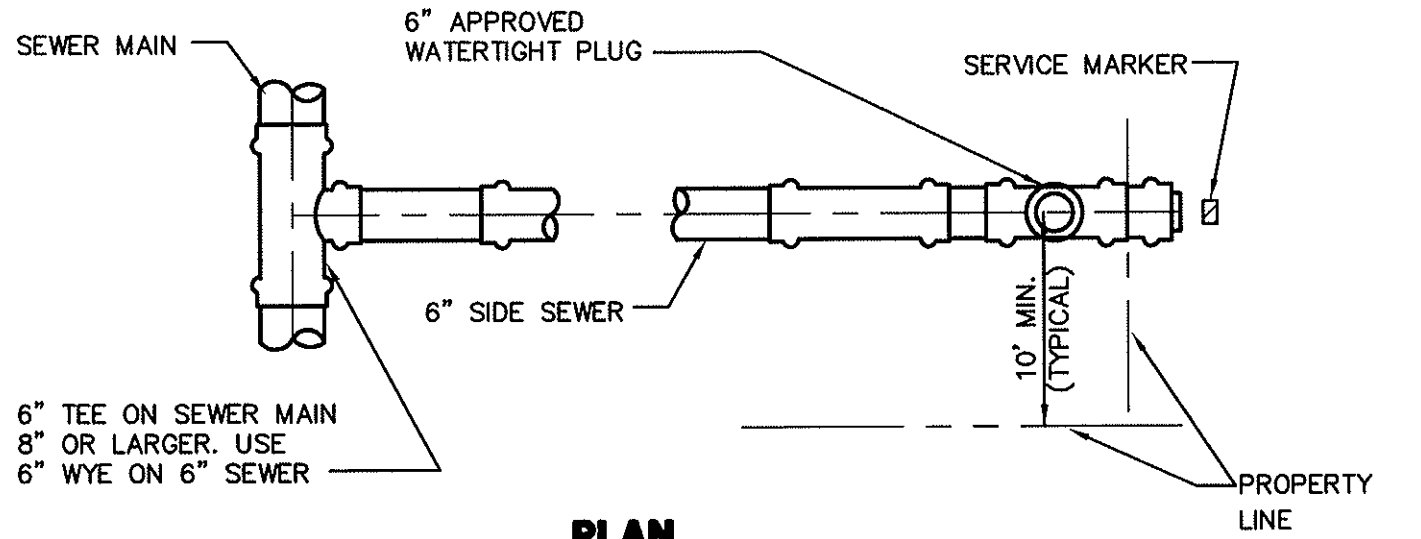

PLAN

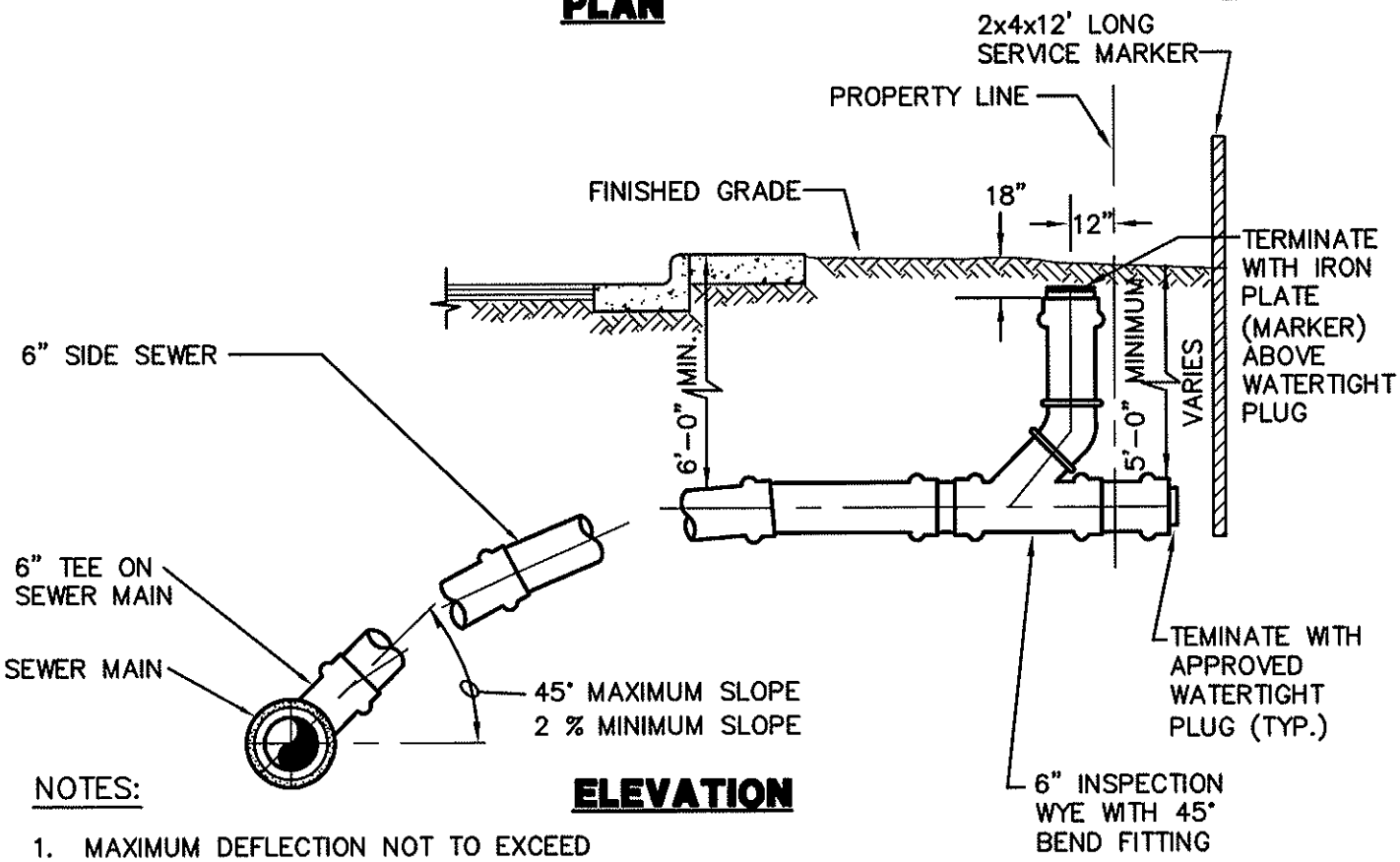

ELEVATION

NOTES:

1. MAXIMUM DEFLECTION NOT TO EXCEED PIPE MANUFACTURER RECOMMENDATIONS.
2. SIDE SEWER LATERAL SHALL BE THE SAME MATERIAL AS THE MAIN LINE SEWER AND BEDDED THE SAME.
3. PIPE TO BE BEDDED IN GRAVEL BACKFILL FOR PIPE ZONE BEDDING OR APPROVED SUITABLE EXCAVATED MATERIAL.
4. TAP EXISTING SEWER MAIN WITH APPROVED CITY SADDLE.
5. PAINT PORTION OF SERVICE MARKER THAT IS ABOVE FINISHED GRADE WITH WHITE PAINT. STENCIL WITH BLACK LETTERS "S/S" USING 3" HIGH LETTERS. LOCATE SERVICE MARKER AT END OF EACH SERVICE. STENCIL TOTAL LENGTH OF 2x4.

CITY OF GRANITE FALLS			
TYPICAL SIDE SEWER DETAIL (WITHIN NEW DEVELOPMENT)			
APPROVED: Warren W. Perkins 4/10/08 BY CITY DATE			DWG. NO. TSSD
DATE: 3/2008	DRWN: M.S.	CHKD: W.P.	SCALE: NONE

L:\GRFALLS\00311 STD DETAILS\STANDARDS\TSSD.DWG, LAYOUT1, 3/24/2008 6:22:48 PM, 1:1, BY: PERKLINS W

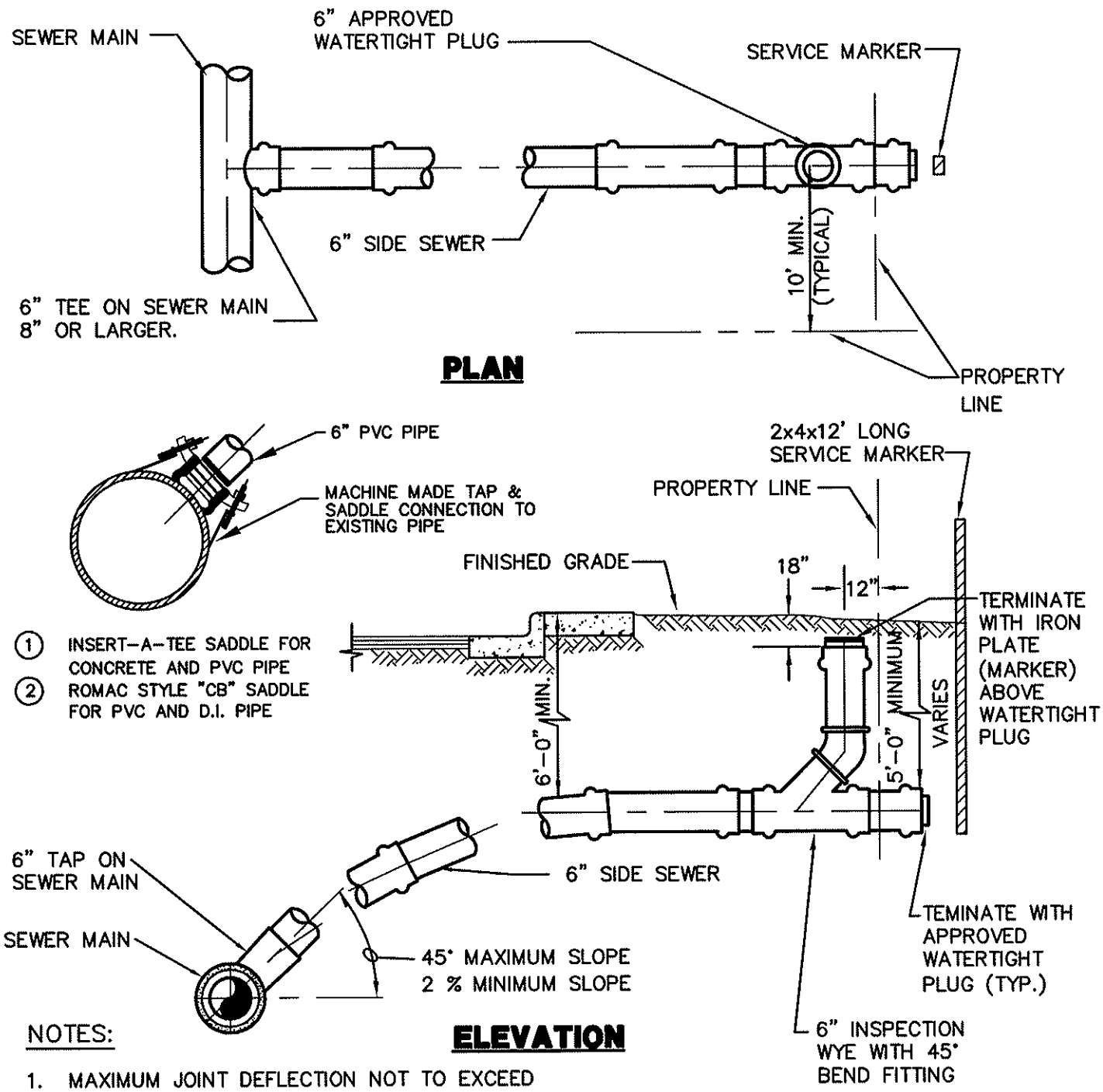

NOTES:

1. MAXIMUM JOINT DEFLECTION NOT TO EXCEED PIPE MANUFACTURER RECOMMENDATIONS.
2. DEVELOPER TO PROVIDE ALL MATERIALS TRQAFFIC CONTROL, SHORING AND MISC. WORK AS REQUIRED FOR INSTALLATION.
3. PIPE TO BE BEDDED IN GRAVEL BACKFILL FOR PIPE ZONE BEDDING OR APPROVED SUITABLE EXCAVATED MATERIAL.
4. TAP EXISTING SEWER MAIN WITH APPROVED CITY SADDLE
5. PAINT PORTION OF SERVICE MARKER THAT IS ABOVE FINISHED GRADE WITH WHITE PAINT. STENCIL WITH BLACK LETTERS "S/S" USING 3" HIGH LETTERS. LOCATE SERVICE MARKER AT END OF EACH SERVICE. STENCIL TOTAL LENGTH OF 2x4

CITY OF GRANITE FALLS			
TYPICAL SIDE SEWER DETAIL (WITHIN EXISTING RIGHT-OF-WAY)			
APPROVED: Warren W. Perkins 4/10/08 BY CITY DATE			DWG. NO. TSSD-RW
DATE: 3/2008	DRWN: M.S.	CHKD: W.P.	SCALE: NONE

L:\GRFALLS\00311 STD DETAILS\STANDARDS\TSSD-RW.DWG, LAYOUT1, 3/24/2008 6:26:03 PM, 1:1, BY: PERKLINS W

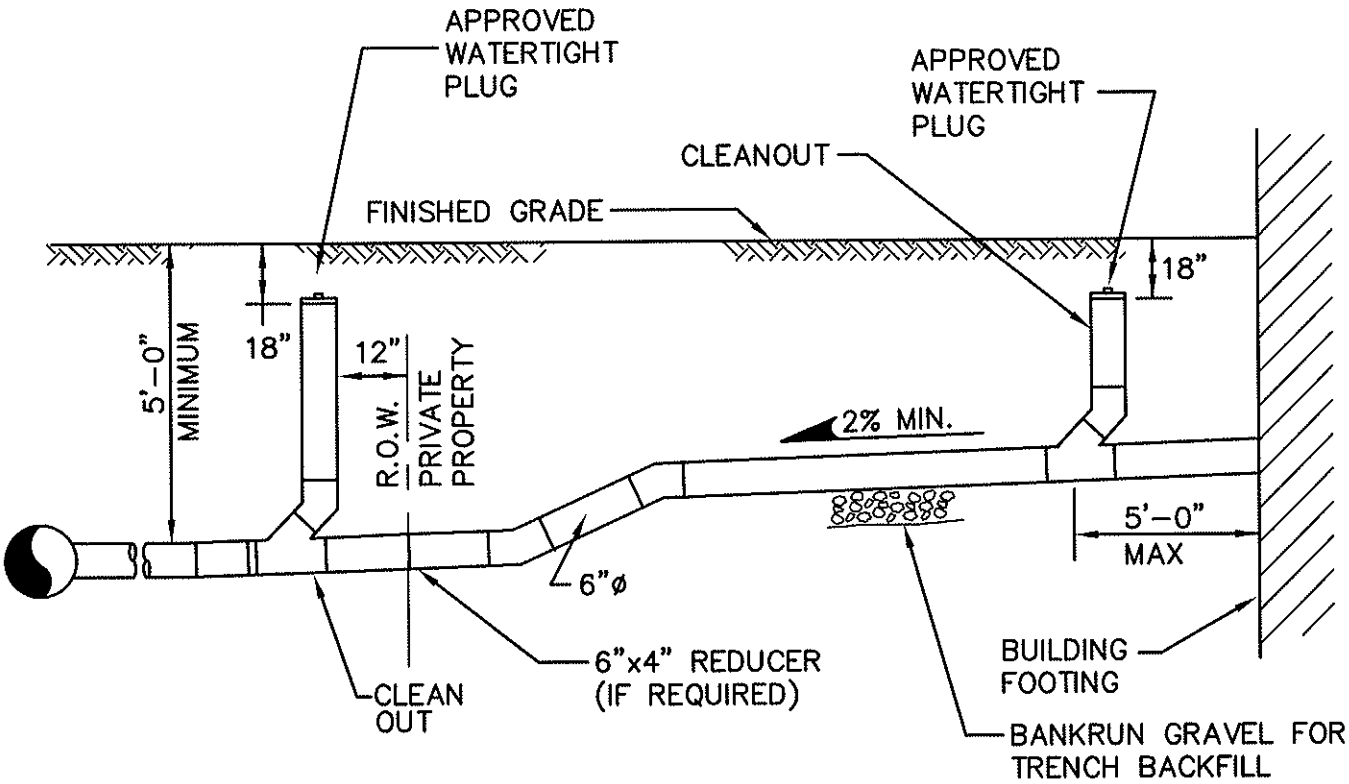

ELEVATION

NOTES:

1. ELBOWS SHALL NOT BE GREATER THAN 45°
2. A CLEAN OUT IS REQUIRED FOR PIPE RUNS GREATER THAN 100' AND FOR EACH 90° ACCUMULATED BEND/100' OF LENGTH
3. RIGHT-OF-WAY RESTORATION SHALL MATCH OR EXCEED ORIGINAL CONDITIONS.
4. TRENCH BACKFILL BENEATH PAVED SURFACE SHALL BE 5/8" MINUS CRUSHED SURFACING TOP COURSE, COMPACTED IN 12" LIFTS
5. ALL PLUMBING OUTLETS SHALL BE CONNECTED TO THE SEWER. NO DOWNSPOUTS OR STORM DRAINAGE SHALL BE CONNECTED TO THE SANITARY SYSTEM.
6. 18" MINIMUM COVER ON ALL PIPES (PRIVATE PROPERTY) AND SLOPE @ 2% MINIMUM.
7. 6' MIMIMUM PIPE COVER AT PROPERTY LINE
8. LAY PIPE IN STRAIGHT LINE BETWEEN BENDS. MAKE ALL CHANGES IN GRADE OR LINE WITH AN ELBOW OR WYE.
9. 6" SEWER PIPE MINIMUM SIZE IN RIGHT-OF-WAY. LAY AT 2% MINIMUM GRADE, 45% MAXIMUM GRADE.
10. 4" SEWER PIPE MINIMUM SIZE ON PRIVATE RESIDENTIAL PROPERTY. 6" SEWER PIPE MIN. SIZE ON COMMERCIAL PROPERTIES. 2% MINIMUM GRADE, 45° MAXIMUM.
11. CONSTRUCTION IN RIGHT-OF-WAY SHALL BE PERFORMED BY A REGISTERED LICENSED CONTRACTOR. ACQUIRE CITY PERMIT.
12. ALL CONSTRUCTION REQUIRES A PERMIT AND PAYMENT OF FEE.
13. AS-BUILT DRAWING SHOWING LOCATION OF SIDE SEWER IN RELATION TO THE HOUSE AND EXISTING UTILITIES IS REQUIRED AFTER INSTALLATION.

CITY OF GRANITE FALLS			
PRIVATE SIDE SEWER INSTALLATION			
APPROVED: Warren W. Perkins 4/10/08 BY CITY DATE			DWG. NO. PSSI
DATE: 3/2008	DRWN: M.S.	CHKD: W.P.	SCALE: NONE

L:\GRFALLS\00311 STD DETAILS\STANDARDS\PSSI.DWG, LAYOUT1, 3/24/2008 6:28:00 PM, 1:1, BY: PERKLINS W

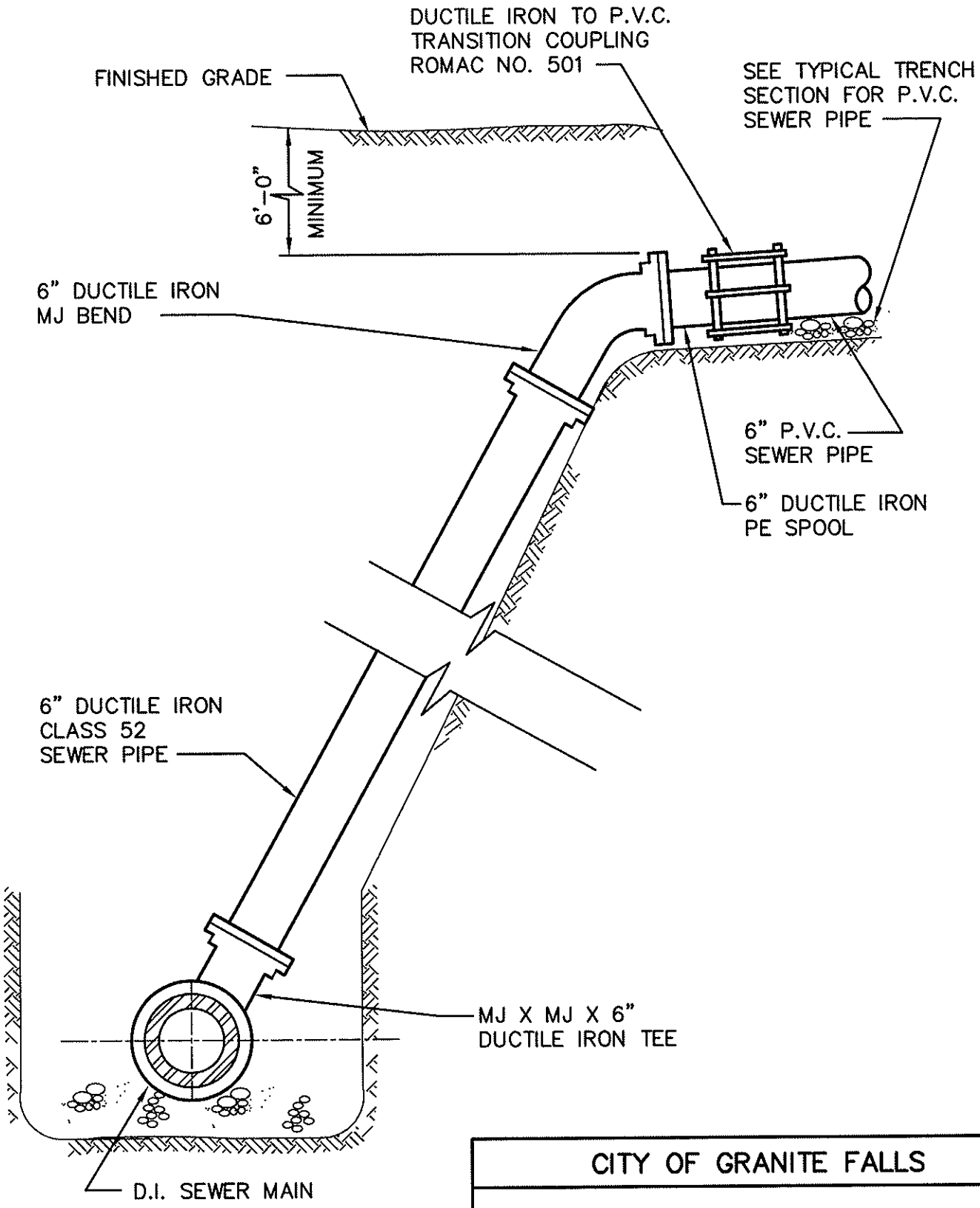

NOTE:

SEE TYPICAL TRENCH SECTION FOR DUCTILE IRON SEWER PIPE FLEXIBLE OR RIGID PIPE AS APPROPRIATE

CITY OF GRANITE FALLS			
STANDING SIDE SEWER			
APPROVED: Warren W. Perkins 4/10/08 BY CITY DATE			DWG. NO. SSS
DATE: 3/2008	DRWN: M.S.	CHKD: W.P.	SCALE: NONE

L:\GRFALLS\0031| STD DETAILS\STANDARDS\SSS.DWG, LAYOUT1, 3/24/2008 6:29:12 PM, 1:1, BY: PERKLINS W

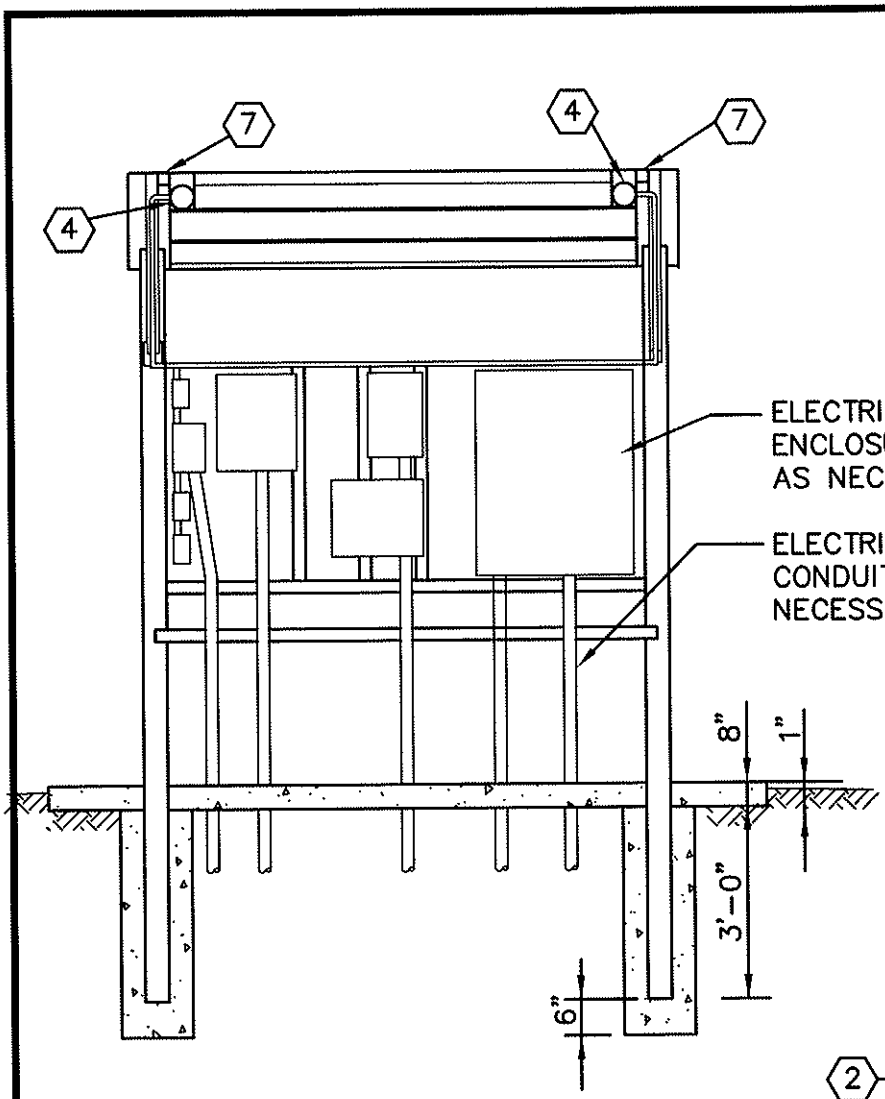

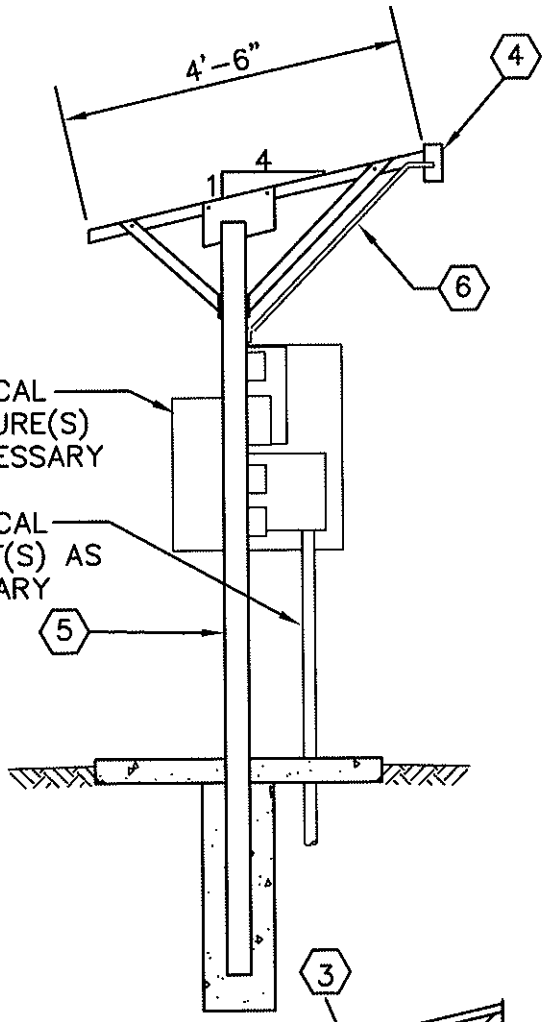

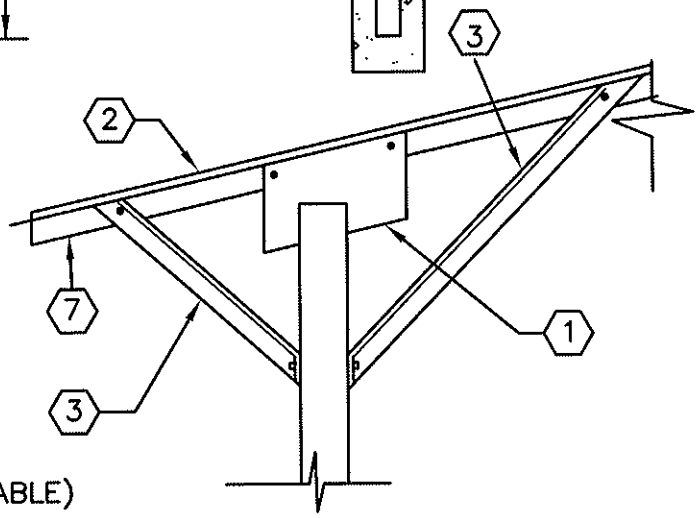

1. GALVANIZED STEEL PLATE 8x14x1/4"
2. 24 GAGE METAL ROOFING MATERIAL, PAINTED, OVERHANG ALL SIDES.
3. 2X2 GALV. STEEL ANGLE
4. LIGHT FIXTURE, 2 SETS, WEATHER PROOF CAST ALUMINUM BOX AND COVER 2 150 WATT FLOOD LIGHTS EACH (ADJUSTABLE)
5. 6" I.D. ELECTRICAL GALV. CONDUIT (SCHEDULE 40) CLOSED TOP (WELDED)
6. ELECTRICAL CONDUIT, 3/4" GALV.
7. 2-1/2" SQUARE TUBE STEEL, 1/4" WALL WITH 4 ROOF SUPPORT STRINGERS.

CITY OF GRANITE FALLS			
ROOF STRUCTURE FOR ELECTRICAL ENCLOSURE			
APPROVED: Warren W. Perkins 4/10/08 BY CITY DATE			DWG. NO. RSEE
DATE: 3/2008	DRWN: M.S.	CHKD: W.P.	SCALE: NONE

L:\GRFALLS\00311 STD DETAILS\STANDARDS\RSEE.DWG, LAYOUT1, 3/24/2008 6:30:00 PM, 1:1, BY: PERKLINS W

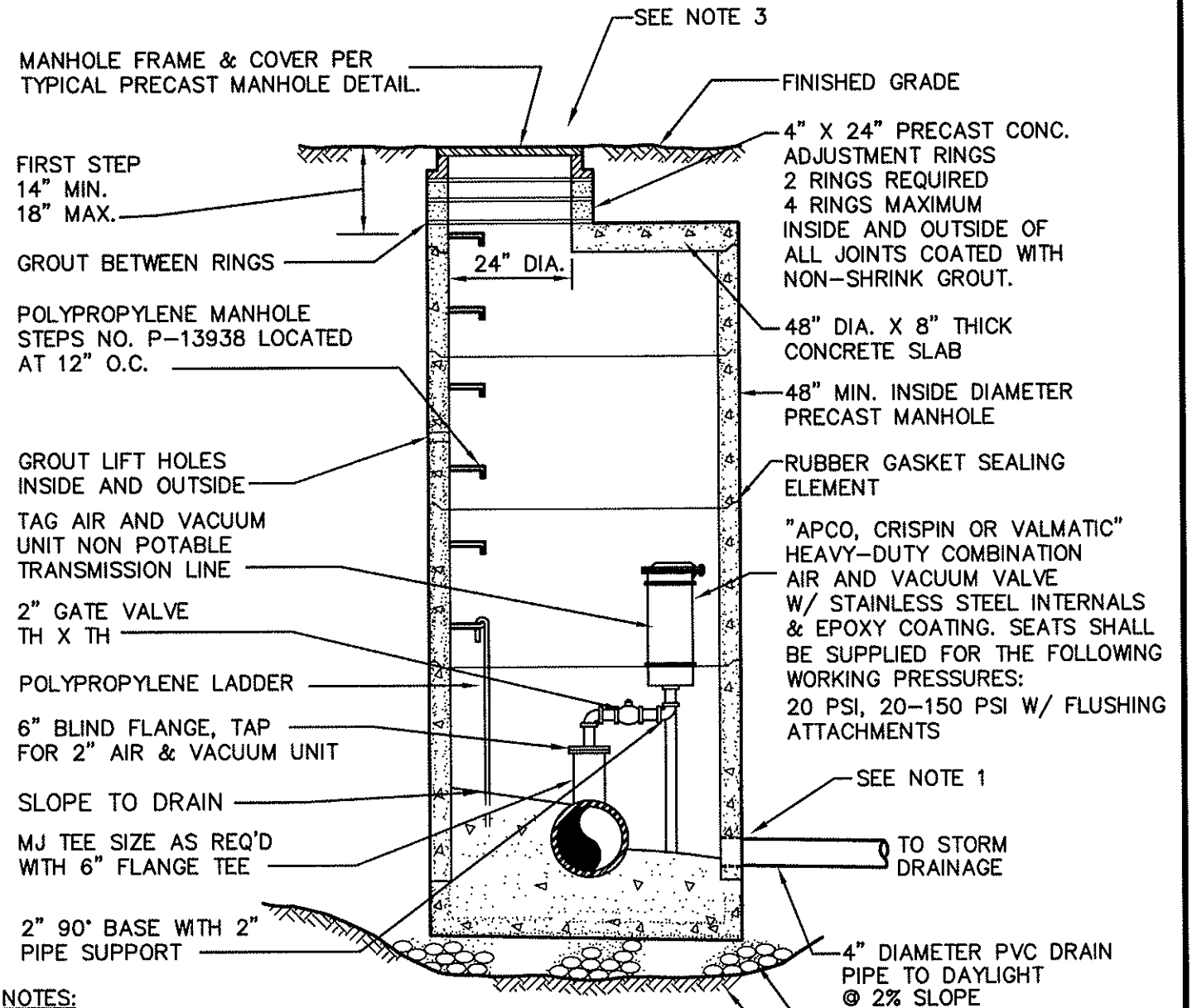

NOTES:

1. PIPE CONNECTIONS TO STORM DRAINAGE MANHOLES SHALL BE AS FOLLOWS:
   PVC PIPE: CAST OR GROUT A MANHOLE COUPLING INTO WALL.
   D.I. PIPE: BELL AND SPIGOT JOINT OR FLEXIBLE COUPLING EITHER SHALL BE 12" MAXIMUM DISTANCE FROM MANHOLE WALL.
   PVC AND D.I. PIPE, OPTIONAL: CORE THE MANHOLE AND CONNECT SEWER PIPE WITH A WATER TIGHT FLEXIBLE RUBBER BOOT IN MANHOLE WALL, KOR-N-SEAL BOOT OR EQUAL.
2. DROP OF GRADE THRU MANHOLE SHALL BE 0.10', UNLESS OTHERWISE APPROVED.
3. INSTALL CONCRETE COLLAR

CITY OF GRANITE FALLS			
AIR & VACUUM RELEASE ASSEMBLY			
APPROVED: Warren W. Perkins 4/10/08 BY CITY DATE			DWG. NO. AVRA
DATE: 3/2008	DRWN: M.S.	CHKD: W.P.	SCALE: NONE

L:\GRFALLS\00311 STD DETAILS\STANDARDS\AVRA.DWG, LAYOUT1, 3/13/2008 8:12:28 AM, 1:1, BY: PERKLINS W

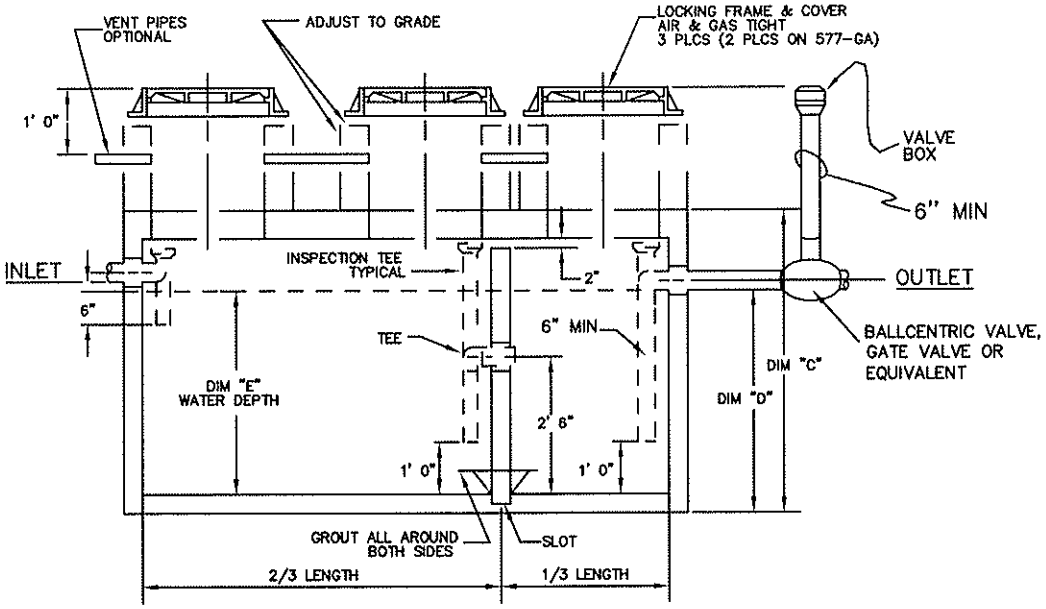

SECTION VIEW AA

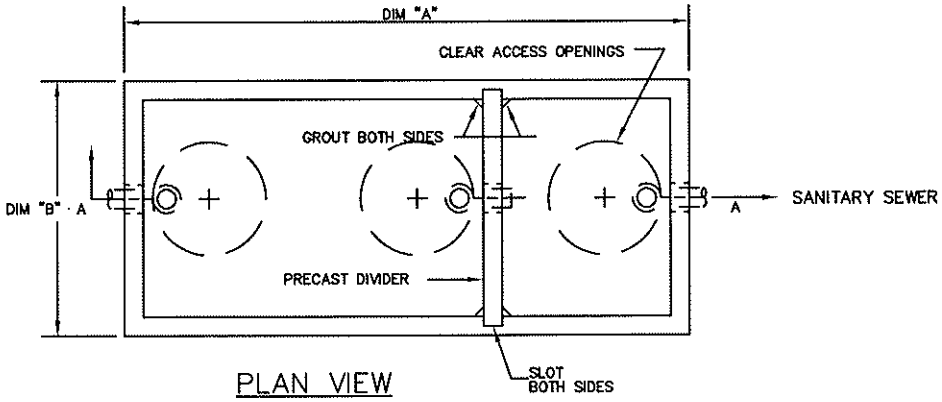

PLAN VIEW

NOTES:

1. CONCRETE: 28 DAY COMPRESSIVE STRENGTH fc = 4500 psi
2. REBAR: ASTM A-615 GRADE 60
3. MESH: ASTM A-185 GRADE 65
4. DESIGN: ACI-318-83 BUILDING CODE ASTM C-857 "MINIMUM STRUCTURAL DESIGN LOADING FOR UNGERGROUND PRECAST CONCRETE UTILITY STRUCTURES"

DIM "A"	DIM "B"	DIM "C"	DIM "D"	WATER DEPTH DIM "E"
7'-0"	4'-8"	7'-0"	3'-6"	3'-2"
7'-0"	4'8"	7'-0"	4'-3"	3'-11"
7'-0"	4'-8"	7'-0"	5'-3"	4'-11"
9'-0"	5'-0"	7'-2"	4'-2"	3'-10"
9'-0"	5'-0"	7'-2"	5'-2"	4'-10"
11'-2"	5'-8"	7'-2"	4'-4"	4'-0"
11'-2"	5'-8"	7'-2"	4'-11"	4'-7"
12'-8"	6'-8"	8'-0"	4'-7"	3'-10"
12'-8"	6'-8"	8'-0"	5'-6"	4'-9"
12'-8"	6'-8"	8'-0"	6'-0"	5'-3"
15'-7"	9'-7"	8'-6.5"	5'-0"	3'-9"
15'-7"	9'-7"	8'-6.5"	6'-3"	5'-0"
19'-11"	9'-11"	8'-11"	6'-2"	4'-9"
19'-11"	9'-11"	8'-11"	7'-2"	5'-9"

CITY OF GRANITE FALLS

GREASE INTERCEPTOR (1 of 2)

APPROVED: Warren V. Perkins 4/10/08
BY CITY DATE

DWG. NO. GREA-INT

DATE:	DRWN:	CHKD:	SCALE:
3/2008	M.S.	W.P.	NONE

L:\GRFALLS\00311 STD DETAILS\STANDARDS\GREA-INT.DWG, LAYOUT1, 3/24/2008 6:52:35 PM, 1:1, BY: PERKLINS W

NOTES FOR GREASE INTERCEPTORS

1. THE PLANS AND SPECIFICATIONS SHALL ILLUSTRATE PROPERTY BOUNDARIES, PIPING/ DRAINAGE DETAILS AND CONNECTIONS TO THE SANITARY SEWER. DETAIL AND ELEVATION DRAWINGS OF THE GREASE INTERCEPTOR SHALL INCLUDE UPC APPENDIX 'H' DESIGN CALCULATIONS TO SHOW CAPACITY, DETENTION TIME AND REMOVAL EFFICIENCIES.

   NO. OF MEALS/PEAK HOUR X WASTE FLOW RATE X RETENTION TIME X STORAGE FACTOR = CAPACITY IN GALLONS

2. EFFLUENT FROM GREASE INTERCEPTORS SHALL NOT EXCEED 100 mg/l FAT, OIL AND GREASE DISCHARGED TO THE SANITARY SEWER.

3. GREASE INTERCEPTORS INSTALLED IN PAVED AREAS SHALL COMPLY WITH H-20 LOADING.

4. THE GREASE INTERCEPTOR SHALL BE INSTALLED AND CONNECTED SUCH THAT IT SHALL BE EASILY ACCESSIBLE FOR INSPECTION, CLEANING AND REMOVAL AT ALL TIMES. NO SANITARY WASTEWATER SHALL BE CONVEYED TO THE SEPARATOR. A SEPARATE SIDE SEWER SHALL BE REQUIRED TO CARRY SANITARY WASTEWATER TO THE SEWER MAIN. IT SHALL BE PLACED AS CLOSE TO THE SERVICE AREA AS PRACTICAL. MANHOLE COVERS SHALL BE GAS TIGHT AND HAVE A MINIMUM OPENING OF 20 INCHES IN DIAMETER.

5. PLUMBING/PIPING SHALL BE CONSTRUCTED TO ESTABLISH "PARALLEL FLOW" (90° TO THE TANK BAFFLE) THROUGH THE GREASE INTERCEPTOR. NO RADIUS, BEND OR ELBOW SHALL BE ALLOWED IN THE INLET PIPE, FOR A MINIMUM OF 10 FEET OR 20 PIPE DIAMETERS, WHICHEVER IS GREATER, UPSTREAM OF THE INTERCEPTOR.

6. VENTING OF THE INTERCEPTOR SHALL BE IN ACCORDANCE WITH CHAPTER 4, 5 AND 7 OF THE UNIFORM PLUMBING CODE-1988 OR AS ADOPTED BY THE CITY OF PUYALLUP.

7. A BALLCENTRIC VALVE OR GATE VALVE SHALL BE LOCATED IN THE DISCHARGE PIPING, A MAXIMUM OF 10 FEET FROM THE GREASE INTERCEPTOR. THIS VALVE SHALL BE CLOSED WHEN CLEANING OR SERVICING THE DEVICE. ANY PUMP MECHANISM SHALL BE INSTALLED DOWNSTREAM OF THE INTERCEPTOR TO PREVENT FAT, OIL AND GREASE EMULSIFICATION. A 'TEE' CONNECTION SHALL BE INSTALLED IN THE DISCHARGE PIPING TO PROVIDE FOR SAMPLE COLLECTION.

8. ALL GREASE INTERCEPTORS SHALL BE FILLED WITH CLEAN WATER BEFORE USE.

9. THE DESIGN ENGINEER SHALL PROVIDE THE CITY ENGINEER OR HIS REPRESENTATIVE WITH A LETTER OF INSPECTION CERTIFYING THAT THE INSTALLATION WAS PERFORMED IN ACCORDANCE WITH ALL REGULATIONS AND THE APPROVED PLAN.

10. FINAL INSPECTION IS REQUIRED BY THE CITY ENGINEER OR HIS REPRESENTATIVE PRIOR TO CONNECTION TO THE SANITARY SEWER.

11. THE PROPERTY OWNER SHALL RETAIN OWNERSHIP OF THE GREASE INTERCEPTOR AND SIDE SEWER LINES AND SHALL BE RESPONSIBLE FOR THEIR OPERATION AND MAINTENANCE. A SERVICE/MAINTENANCE RECORD SHALL BE KEPT ON THE PREMISES AT ALL TIMES AND SHALL BE IMMEDIATELY AVALABLE TO THE CITY ENGINEER OR HIS REPRESENTATIVE UPON REQUEST.

12 THE PROPERTY OWNER SHALL REPORT IMMEDIATELY TO THE CITY ENGINEER OR HIS REPRESENTATIVE, ANY SPILL, SURCHARGE, BYPASS OR MECHANICAL FAULT OR FAILURE WHICH INTERRUPTS OR OTHERWISE REDUCES THE CAPACITY OR REMOVAL EFFICEINCY OF THE GREASE INTERCEPTOR.

CITY OF GRANITE FALLS			
GREASE INTERCEPTOR (2 of 2)			
APPROVED: Warren W. Valkin 4/10/08 BY CITY DATE			DWG. NO. GREA-INT
DATE: 3/2008	DRWN: M.S.	CHKD: W.P.	SCALE: NONE

L:\GRFALLS\10031I STD DETAILS\STANDARDS\GREA-INT.DWG, LAYOUT1, 3/24/2008 6:43:25 PM, 1:1, BY: PERKLINS W

Water System Details

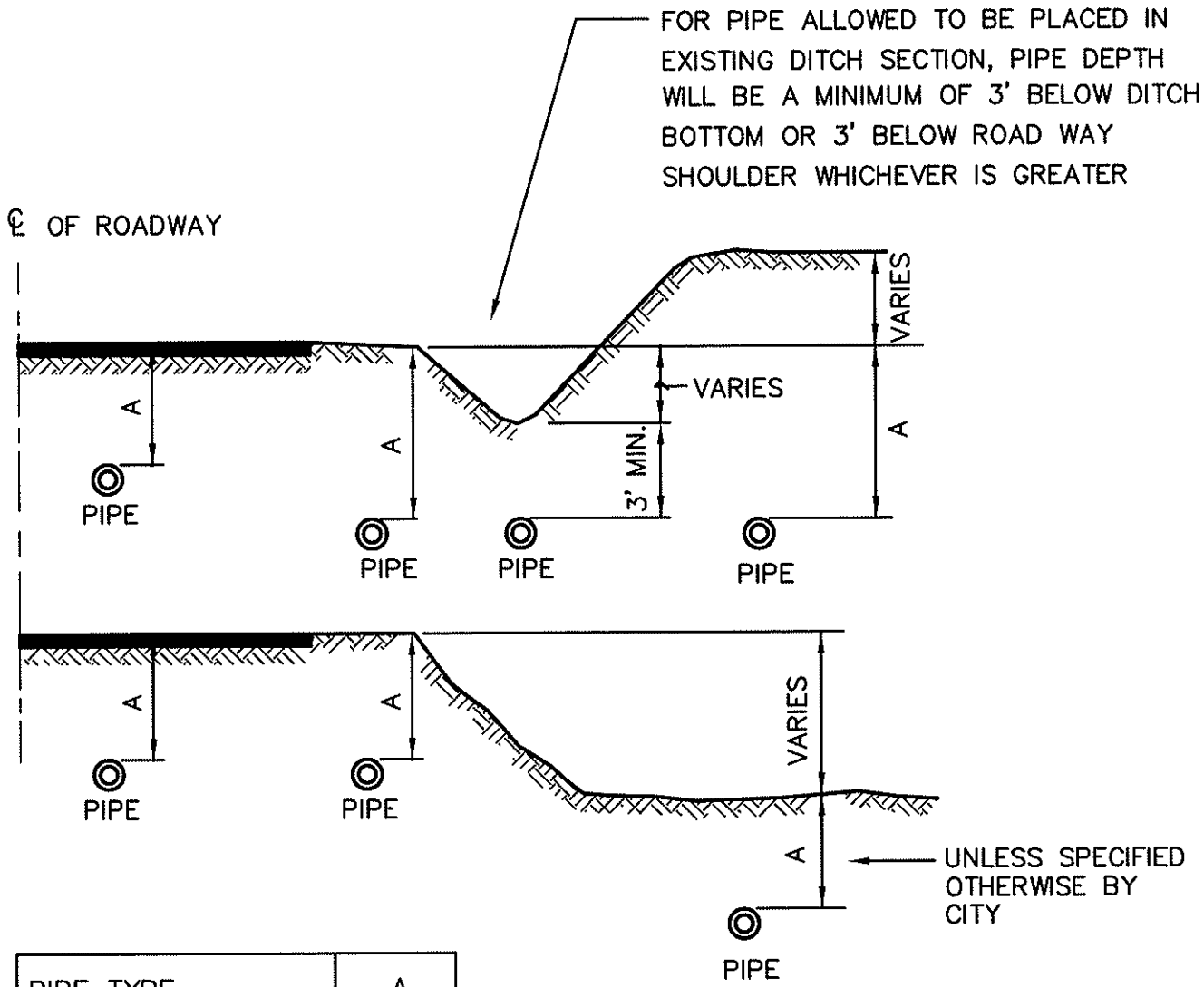

PIPE TYPE	A
TRANSMISSION	42"
DISTRIBUITION	36"

* MINIMUM DEPTH

CITY OF GRANITE FALLS			
WATER MAIN DEPTH REQUIREMENTS			
APPROVED: Warren W. Perkins 4/10/08 BY CITY DATE			DWG. NO. WA-MAIN
DATE: 3/2008	DRWN: M.S.	CHKD: W.P.	SCALE: NONE

L:\GRFALLS\00311 STD DETAILS\STANDARDS\WA-MAIN.DWG, LAYOUT1, 3/25/2008 4:04:32 PM, 1:1, BY: PERKLINS W

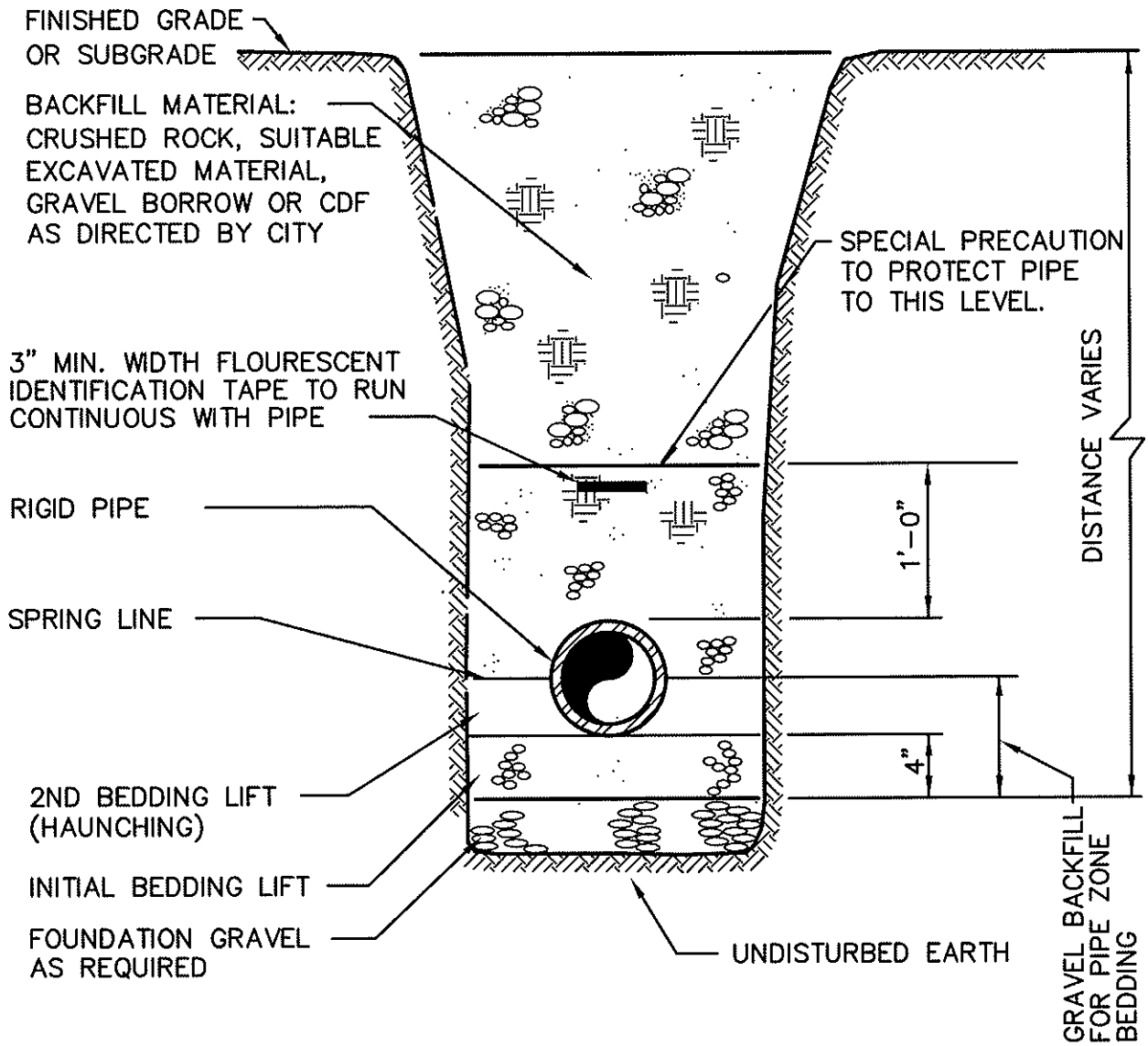

NOTE:

BACKFILL MATERIAL AND COMPACTION SHALL BE IN CONFORMANCE WITH CITY STANDARDS AND/OR THE STATE OR COUNTY PERMIT REQUIREMENTS (AS MAY BE APPLICABLE);

MINIMUM REQUIREMENTS:
ALL GRANULAR BACKFILL SHALL BE COMPACTED TO 95% MODIFIED PROCTOR, ASTM D1557

CITY OF GRANITE FALLS			
TRENCH SECTION FOR RIGID PIPE			
APPROVED: Warren W. Perkins 4/10/08 BY CITY DATE			DWG. NO. SSTSRIGIDP
DATE: 3/2008	DRWN: M.S.	CHKD: W.P.	SCALE: NONE

L:\GRFALLS\00311 STD DETAILS\STANDARDS\SSTSRIGIDP.DWG, LAYOUT1, 3/25/2008 4:05:31 PM, 1:1, BY: PERKLINS W

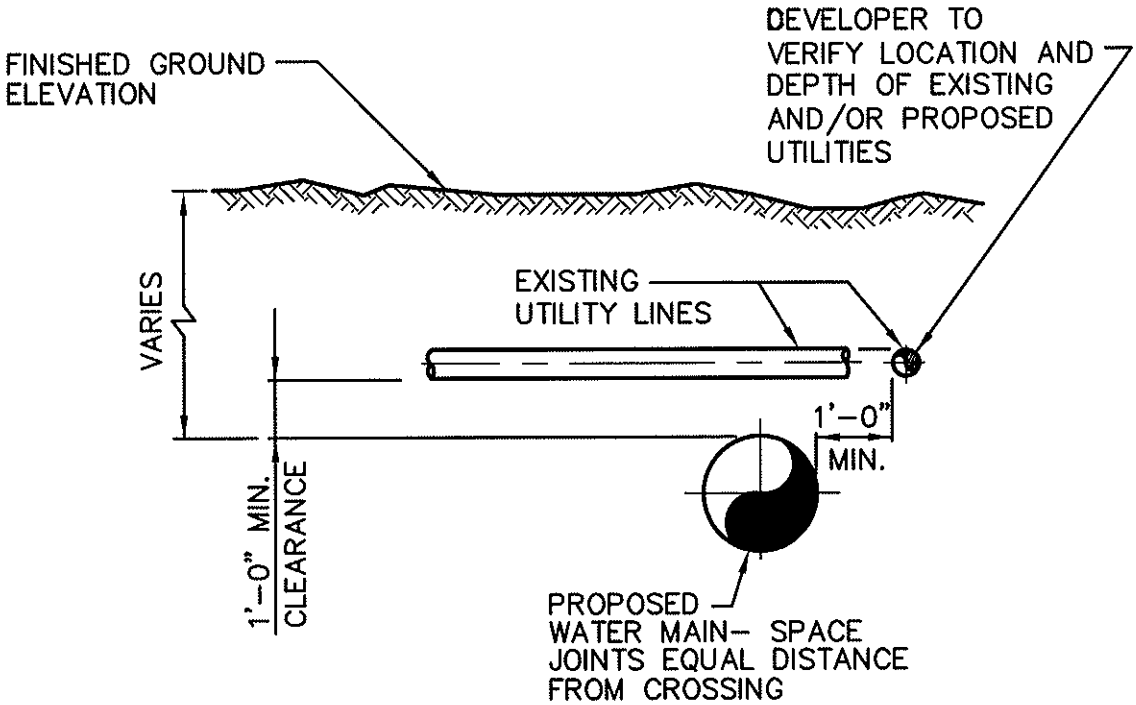

NOTE: CONCRETE ENCASEMENT (BEDDING) SHALL BE UTILIZED, IF APPROVED BY THE CITY, AT LOCALIZED UTILITY CROSSING IF MINIMUM PIPE SEPARATION (ELEVATION) CANNOT BE MAINTAINED / ACHIEVED.

CITY OF GRANITE FALLS			
TYPICAL UTILITY CROSSING			
APPROVED: Warren N. Perkins 4/10/08 BY CITY DATE			DWG. NO. TYP-UTIL
DATE: 3/2008	DRWN: M.S.	CHKD: W.P.	SCALE: NONE

L:\GRFALLS\003II STD DETAILS\STANDARDS\TYP-UTIL.DWG, LAYOUT1, 3/25/2008 4:06:19 PM, 1:1, BY: PERKLINS W

MINIMUM BEARING AREA TABLE					
FITTING D	TEE	90°	45°	22 1/2°	11 1/4°
6"	4 SQ.FT.	6 SQ.FT.	3 SQ.FT.	2 SQ.FT.	2 SQ.FT.
8"	7 SQ.FT.	10 SQ.FT.	6 SQ.FT.	3 SQ.FT.	2 SQ.FT.
10"	10 SQ.FT.	15 SQ.FT.	9 SQ.FT.	5 SQ.FT.	3 SQ.FT.
12"	14 SQ.FT.	22 SQ.FT.	12 SQ.FT.	6 SQ.FT.	4 SQ.FT.
16"	25 SQ.FT.	38 SQ.FT.	21 SQ.FT.	11 SQ.FT.	7 SQ.FT.
18"	32 SQ.FT.	48 SQ.FT.	27 SQ.FT.	14 SQ.FT.	8 SQ.FT.

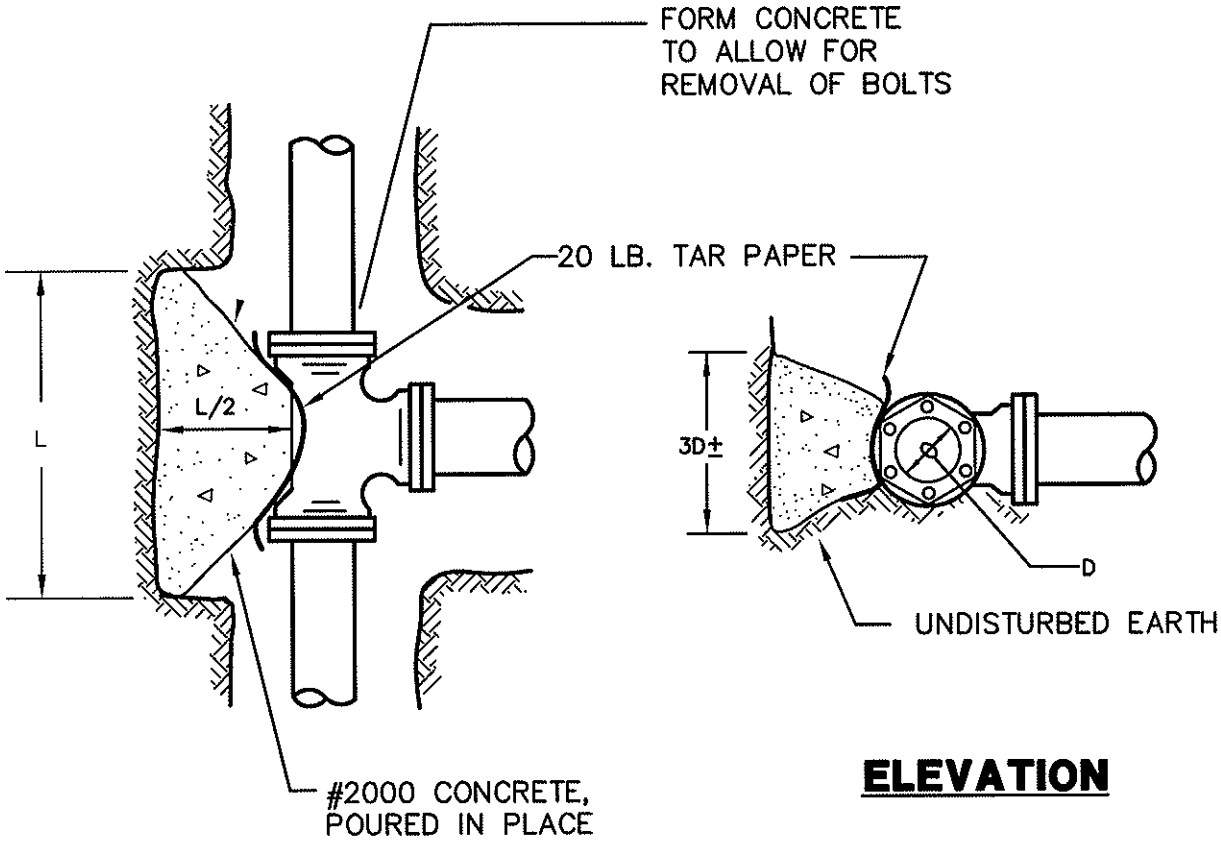

PLAN

ELEVATION

NOTE:
BEARING AREA TABLE BASED ON 250 PSI PRESSURE AND 2000 PSF SOIL BEARING. IF PRESSURE IS GREATER OR SOIL BEARING IS LESS, THE THRUST BLOCK SIZE SHALL BE INCREASED.

THIS TABLE REPRESENTS THE "MINIMUM" CONSTRUCTION STANDARDS. APPROPRIATELY SIZED THRUST BLOCKS BASED ON EXISTING AND LOCAL CONDITIONS ARE REQUIRED IF SOIL BEARING PRESSURE IS LESS THAN 2000 PSI OR PIPELINE PRESSURE EXCEEDS 250 PSI

CITY OF GRANITE FALLS			
CONCRETE THRUST BLOCK			
APPROVED: Warren R. Perkins 4/10/08 BY CITY DATE			DWG. NO. THR-BLO
DATE: 3/2008	DRWN: M.S.	CHKD: W.P.	SCALE: NONE

L:\GRFALLS\0031I STD DETAILS\STANDARDS\THR-BLO.DWG, LAYOUT1, 3/25/2008 4:36:56 PM, 1:1, BY: PERKLINS W

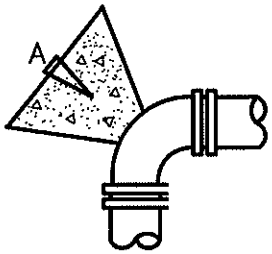

90° BEND

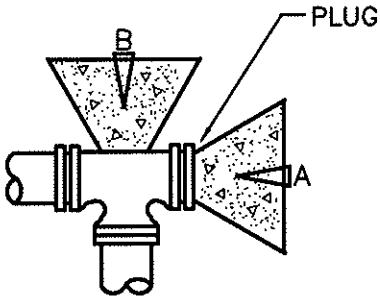

TEE

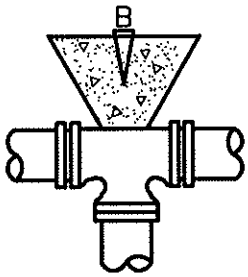

TEE

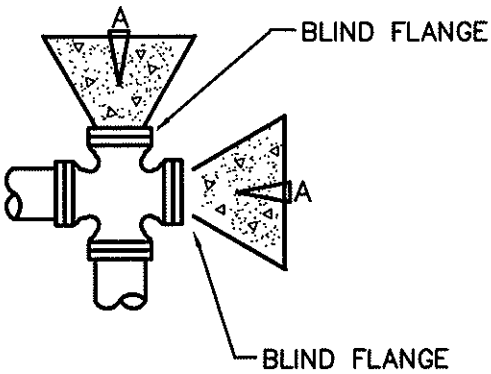

CAPPED CROSS

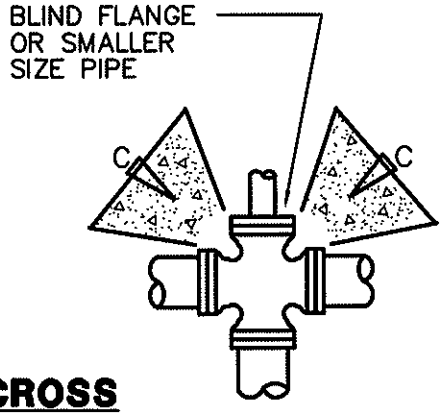

CROSS

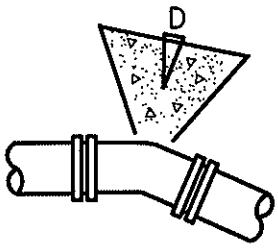

22 1/2 ° BEND

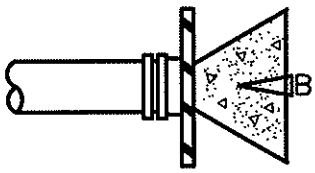

CAP

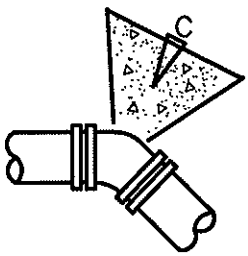

45° BEND

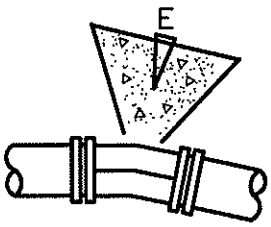

11 1/4 ° BEND

CITY OF GRANITE FALLS			
THRUST BLOCK DETAIL (1 of 2)			
APPROVED: Warren W. Perkins 4/10/08 BY CITY DATE			DWG. NO. THRU-BLO2
DATE: 3/2008	DRWN: M.S.	CHKD: W.P.	SCALE: NONE

L:\GRFALLS\0031I STD DETAILS\STANDARDS\THRU-BLO2.DWG, LAYOUT1, 3/25/2008 4:12:58 PM, 1:1, BY: PERKLINS W

THRUST BLOCK – TABLE

MIN. BEARING AREA AGAINST UNDISTURBED SOIL SQUARE FEET

PIPE SIZE	A(FT^2)	B(FT^2)	C(FT^2)	D(FT^2)	E(FT^2)	X
4"	3	1	1	1	1	NONE
6"	4	4	2	1	1	NONE
8"	7	6	4	2	1	4
10"	11	10	6	3	2	6
12'	16	14	9	5	3	9
14"	22	19	12	6	3	12
16"	29	25	16	8	4	16
18"	36	31	20	10	5	20
20"	45	39	24	13	6	24
22"	54	47	29	15	8	29
24"	64	56	35	18	9	35
28"	87	76	48	24	12	48
30"	101	87	55	28	14	55
36"	145	125	78	40	20	78
42"	197	171	107	55	27	107
48"	257	223	140	71	36	140

NOTES:

1. BEARING AREA OF CONCRETE THRUST–BLOCK BASED ON 200 PSI PRESSURE AND SAFE SOIL BEARING LOAD OF 2,000 POUNDS PER SQUARE FOOT.
2. AREAS MUST BE ADJUSTED FOR OTHER PIPE SIZES, PRESSURES AND SOIL CONDITIONS.
3. CONCRETE BLOCKING SHALL BE CAST IN PLACE AND HAVE A MINIMUM OF 1/4 SQUARE FOOT BEARING AGAINST THE FITTING. WRAP ALL FITTINGS IN 6 MIL PLASTIC PRIOR TO POURING BLOCK. NO CONCRETE SHALL BE PLACED NEAR BOLTS.
4. BLOCK SHALL BEAR AGAINST FITTINGS ONLY AND SHALL BE CLEAR OF JOINTS TO PERMIT TAKING UP OR DISMANTLING OF JOINT.
5. CONTRACTOR SHALL INSTALL BLOCKING ADEQUATE TO WITHSTAND FULL TEST PRESSURE AS WELL AS CONTINUOUSLY WITHSTAND OPERATING PRESSURE UNDER ALL CONDITIONS OF SERVICE.

CITY OF GRANITE FALLS			
THRUST BLOCK DETAIL (2 of 2)			
APPROVED: Warren W Perkins 4/10/08 BY CITY DATE			DWG. NO. THRU–BLO2
DATE: 3/2008	DRWN: M.S.	CHKD: W.P.	SCALE: NONE

L:\GRFALLS\00311 STD DETAILS\STANDARDS\THRU-BLO2.DWG, LAYOUT1, 3/25/2008 4:12:07 PM, 1:1, BY: PERKLINS W

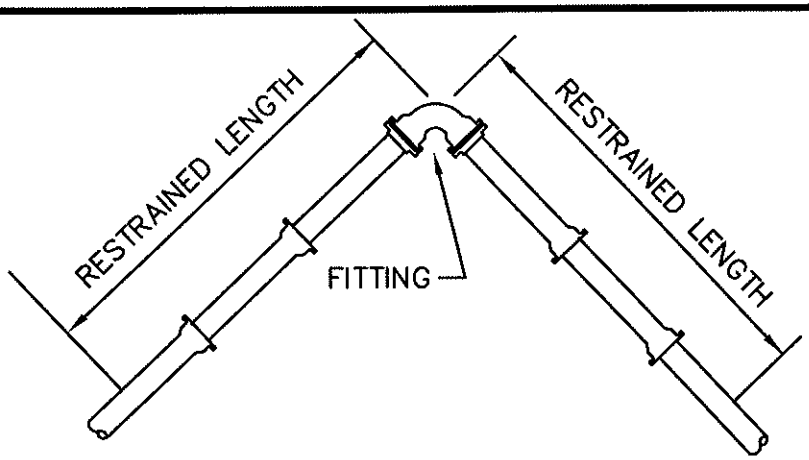

PIPE SIZE	90° BEND	45° BEND	22 1/2° BEND	11 1/4° BEND	TEE OR DEAD END CAP
	RESTRAINED LENGTH IN FEET				
4"	40	17	8	4	30
6"	55	23	11	6	39
8"	73	31	15	8	53
10"	88	37	18	9	67
12"	103	43	21	10	82
16"	133	55	27	13	110
18"	145	60	29	15	124

NOTES:

① RESTRAINED LENGTHS SHOWN ARE MINIMUM AND FOR LINEAL FEET REQUIRED ON EACH SIDE OF FITTING INDICATED.

② FOOTAGES ARE BASED ON 250 PSI PRESSURE AND 42 INCHES COVER. IF PRESSURE IS GREATER OR COVER IS LESS, THE RESTRAINED LENGTH SHALL BE INCREASED ACCORDINGLY

CITY OF GRANITE FALLS			
THRUST RESTRAINT FOR DUCTILE IRON PIPE			
APPROVED: Warren W. Perkins 4/10/08 BY CITY DATE			DWG. NO. DUCT-PIP
DATE: 3/2008	DRWN: M.S.	CHKD: W.P.	SCALE: NONE

L:\GRFALLS\00311 STD DETAILS\STANDARDS\DUCT-PIP.DWG, LAYOUT1, 3/25/2008 4:13:45 PM, 1:1, BY: PERKLINS W

TYPE "A" BLOCKING
FOR 11 1/4°–22 1/2°–30° VERTICAL BENDS

PIPE SIZE NOMINAL DIAMETER– INCHES	TEST PRESSURE PSI	VB VERTICAL BEND DEGREES	No. OF CU. FT. OF CONC. BLOCKING	S SIDE OF CUBE LIN. FT.	D DIAM. OF SHACKLE RODS (2) INCHES	L DEPTH OF RODS IN CONCRETE LIN. FT.
4"	300	11 1/4	8	2	5/8"	1.5
		22 1/2	11	2.2		2.0
		30	17	2.6		
6"	300	11 1/4	11	2.2	5/8"	2.0
		22 1/2	25	2.9		
		30	41	3.5		
8"	300	11 1/4	16	2.5	5/8"	2.0
		22 1/2	47	3.6		
		30	70	4.1	3/4"	2.5
12"	250	11 1/4	32	3.2	5/8"	2.0
		22 1/2	88	4.5	7/8"	3.0
		30	132	5.1		
16"	225	11 1/4	70	4.1	7/8"	3.0
		22 1/2	184	5.7	1 1/8"	4.0
		30	275	6.5	1 1/4"	
20"	200	11 1/4	91	4.5	7/8"	3.0
		22 1/2	225	6.1	1 1/4"	4.0
		30	330	6.9	1 3/8"	4.5
24"	200	11 1/4	128	5.0	1"	3.5
		22 1/2	320	6.8	1 3/8"	4.5
		30	480	7.9	1 7/8"	5.5

TYPE "B" BLOCKING
FOR – 45° VERTICAL BENDS

		VB		S	D	L
4"	300	45	30	3.1	5/8"	2.0
6"			68	4.1		
8"			123	5.0		
12"	250		232	6.1	3/4"	2.5
16"	225		478	7.8	1 1/8"	4.0
20"	200		560	8.2	1 1/4"	
24"			820	9.4	1 3/8"	4.5

THIS TABLE REPRESENTS THE "MINIMUM" CONSTRUCTION STANDARD. APPROPRIATELY SIZED ANCHOR BLOCKS BASED ON EXISTING AND LOCAL CONDITIONS ARE REQUIRED

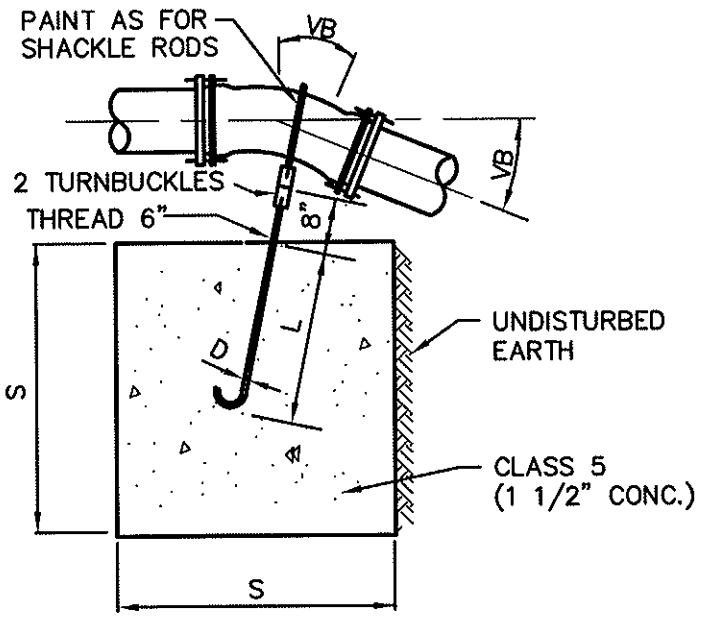

TYPE "A" BLOCKING

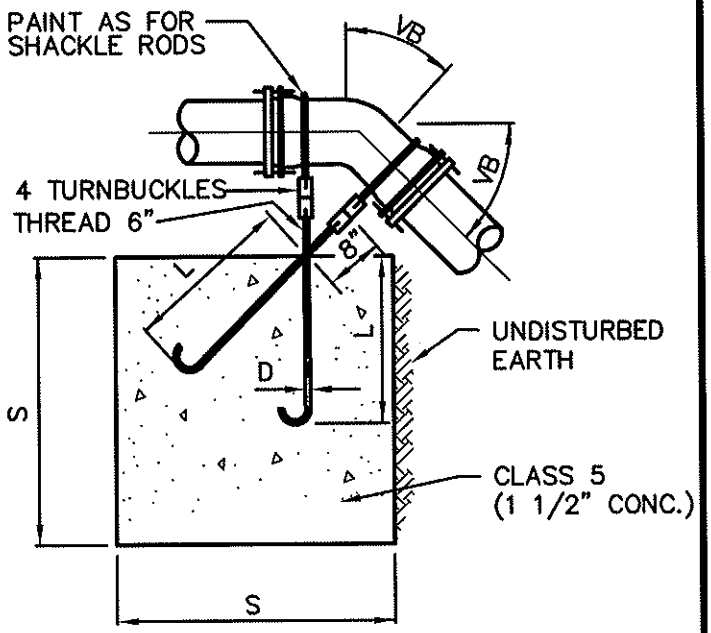

TYPE "B" BLOCKING

CITY OF GRANITE FALLS

ANCHOR BLOCK

APPROVED: Warren W. Perkins 4/10/08
BY CITY DATE

DWG. NO. ANCH–BLO

DATE:	DRWN:	CHKD:	SCALE:
3/2008	M.S.	W.P.	NONE

L:\GRFALLS\00311 STD DETAILS\STANDARDS\ANCH-BLO.DWG, LAYOUT1, 3/25/2008 4:14:58 PM, 1:1, BY: PERKLINS W

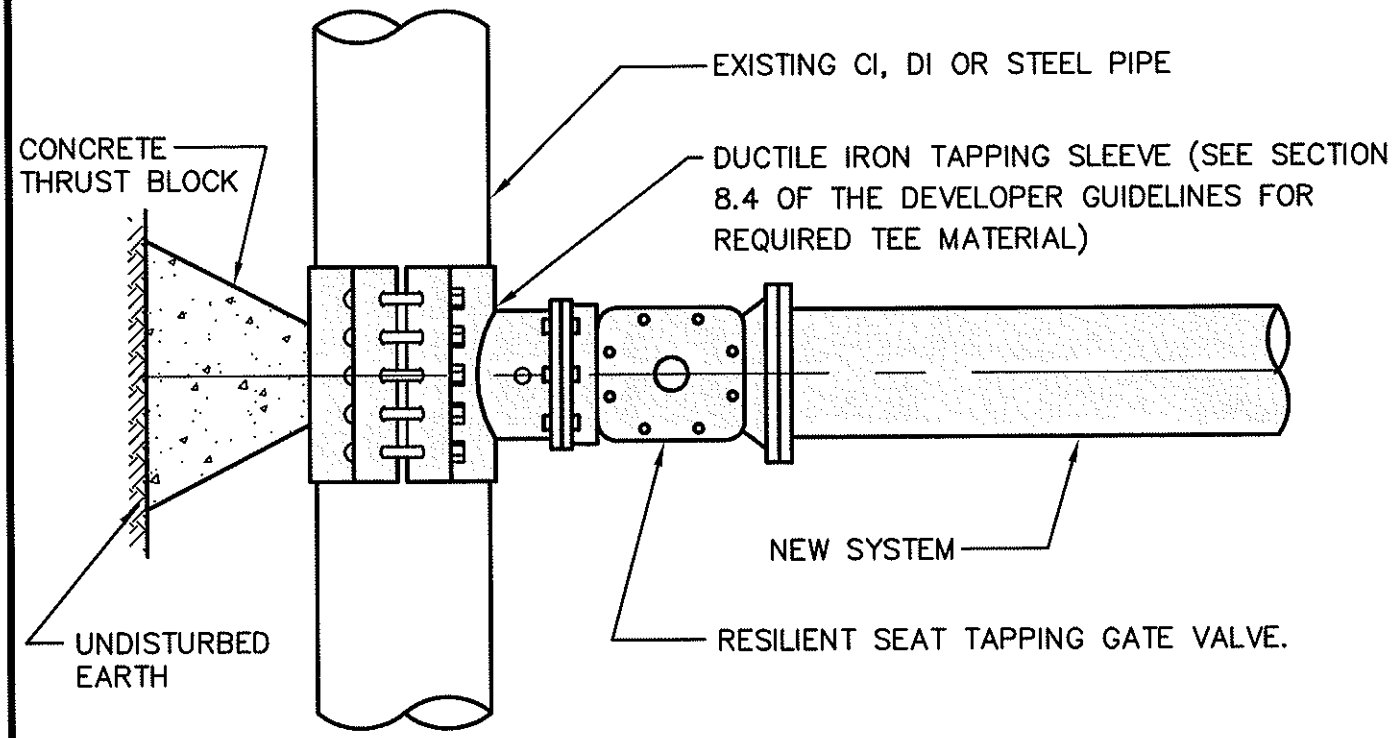

CITY OF GRANITE FALLS			
WET OR HOT TAP CONNECTION			
APPROVED: Warren R. Perkins 4/10/08 BY CITY DATE			DWG. NO. TAP-CONN
DATE: 3/2008	DRWN: M.S.	CHKD: W.P.	SCALE: NONE

L:\GRFALLS\0031I STD DETAILS\STANDARDS\TAP-CONN.DWG, LAYOUT1, 3/25/2008 4:16:00 PM, 1:1, BY: PERKLINS W

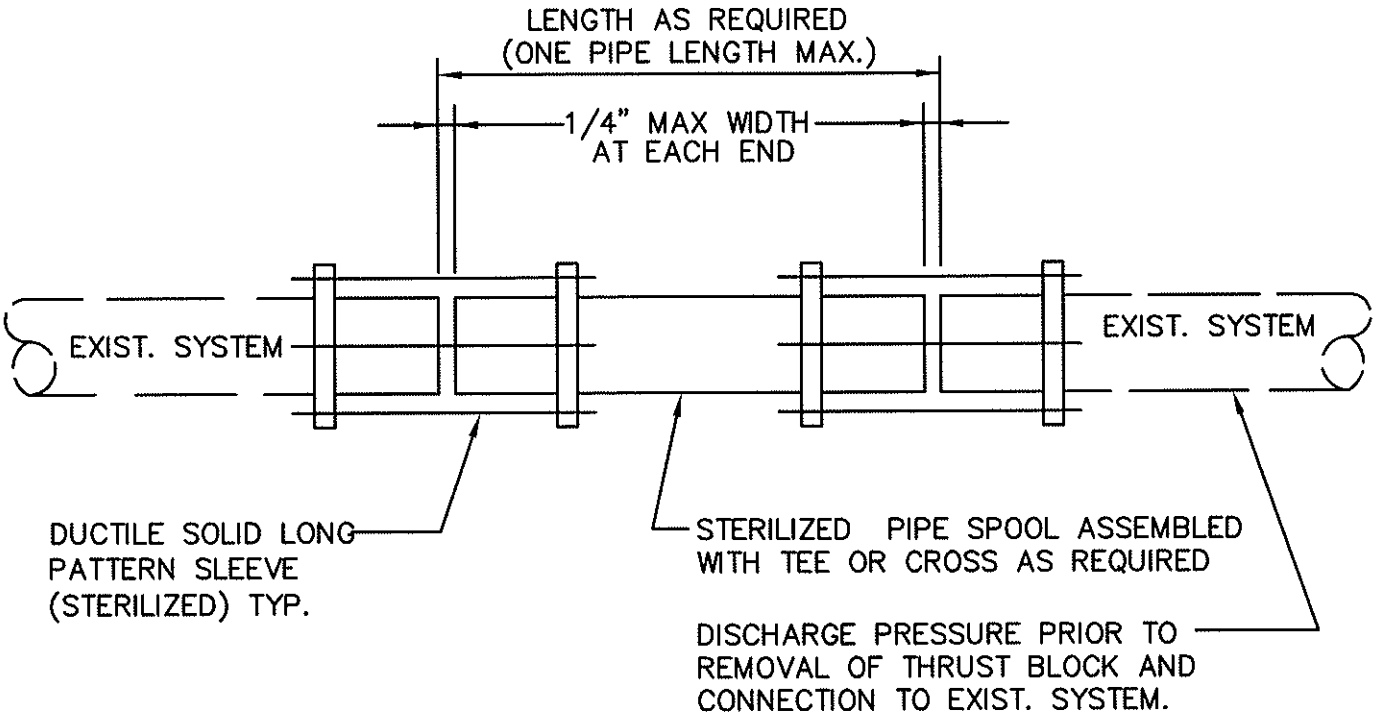

NOTE:

1. NO DEFLECTION SHALL BE ALLOWED AT EITHER COUPLING.
2. CUT-IN CONNECTIONS ON STEEL PIPE TO USE D.I. x O.D. STEEL TRANSITION COUPLINGS ROMAC OR EQUAL.
3. IN-LINE VALVE(S) IN EXISTING SYSTEM MAY BE REQUIRED AT THE SOLE DISCRETION OF THE CITY AT ALL NEW INTERTIE LOCATIONS. (NOTE: VALVE(S) ARE NOT SHOWN ABOVE FOR CLARITY)

CITY OF GRANITE FALLS			
CUT IN CONNECTION			
APPROVED: Warren W. Perkins 4/10/08 BY CITY DATE			DWG. NO. CUT-CONN
DATE: 3/2008	DRWN: M.S.	CHKD: W.P.	SCALE: NONE

L:\GRFALLS\00311 STD DETAILS\STANDARDS\CUT-CONN.DWG, LAYOUT1, 3/25/2008 4:17:25 PM, 1:1, BY: PERKLINS W

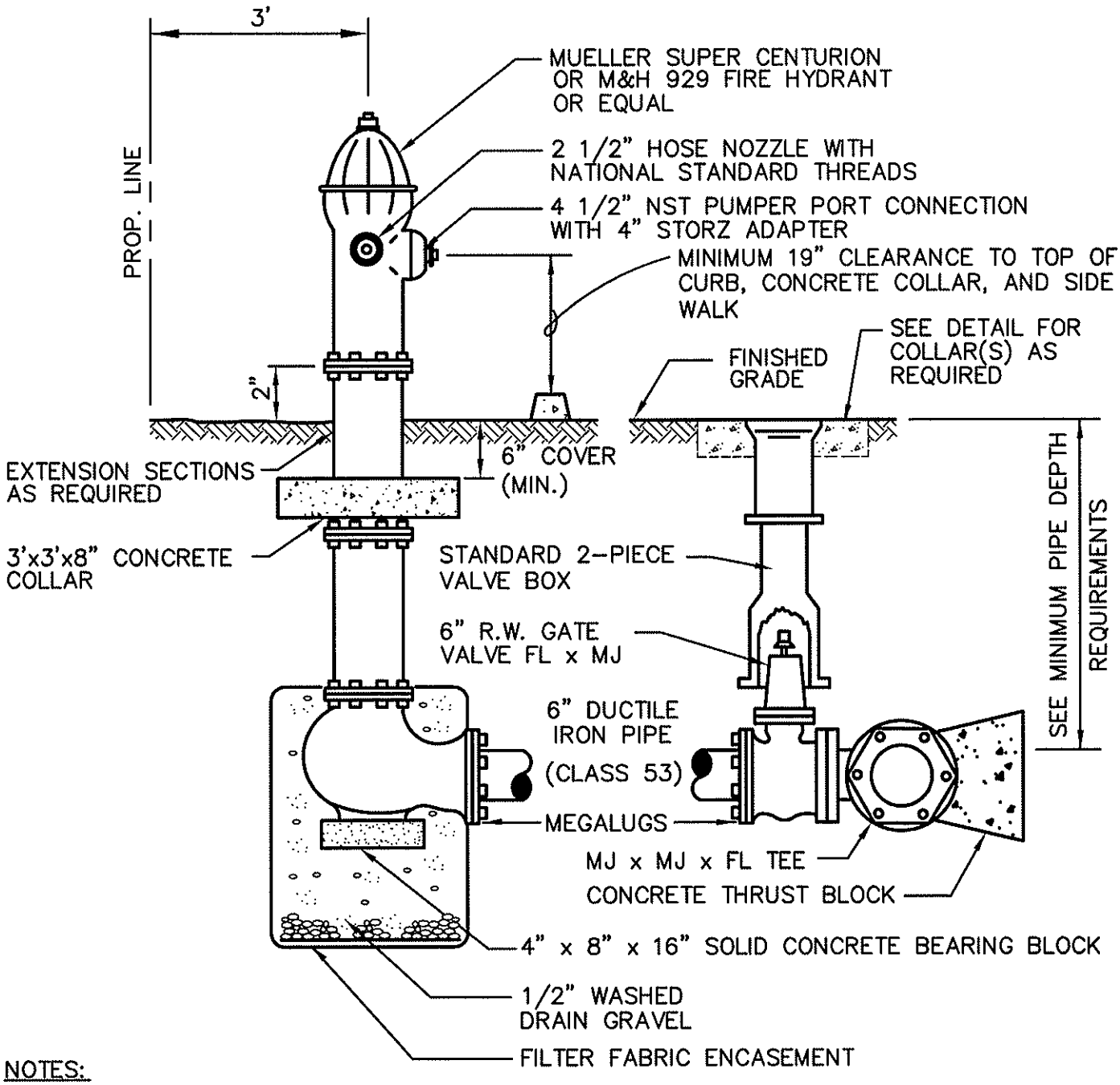

NOTES:

1. FIRE HYDRANTS TO BE PAINTED AS FOLLOWS:
   A. IF IN CITY: RUSTOLEUM SAFETY YELLOW BASE No. 288-14, COLOR CODE AX-6732, T-4432
   B. IF IN COUNTY: APPLY SNOHOMISH COUNTY P.U.D. REQUIREMENTS
2. INSTALL BLUE LANE REFLECTOR IN PAVEMENT.
3. STANDARD 4 1/2" NST PUMPER PORT CAP SUPPLIED WITH HYDRANT SHALL BE SALVAGED FOR CITY USE.
4. HYDRANTS SHALL BE MUELLER SUPER CENTURION OR M&H 929 OR EQUAL.

CITY OF GRANITE FALLS			
FIRE HYDRANT INSTALLATION (EXTRUDED CURB)			
APPROVED: Warren W. Perkins 4/10/08 BY CITY DATE			DWG. NO. FIRE-HYD
DATE: 3/2008	DRWN: M.S.	CHKD: W.P.	SCALE: NONE

L:\GRFALLS\0031 STD DETAILS\STANDARDS\FIRE-HYD.DWG, LAYOUT1, 3/7/2008 9:51:29 AM, 1:1, BY: PERKLINS W

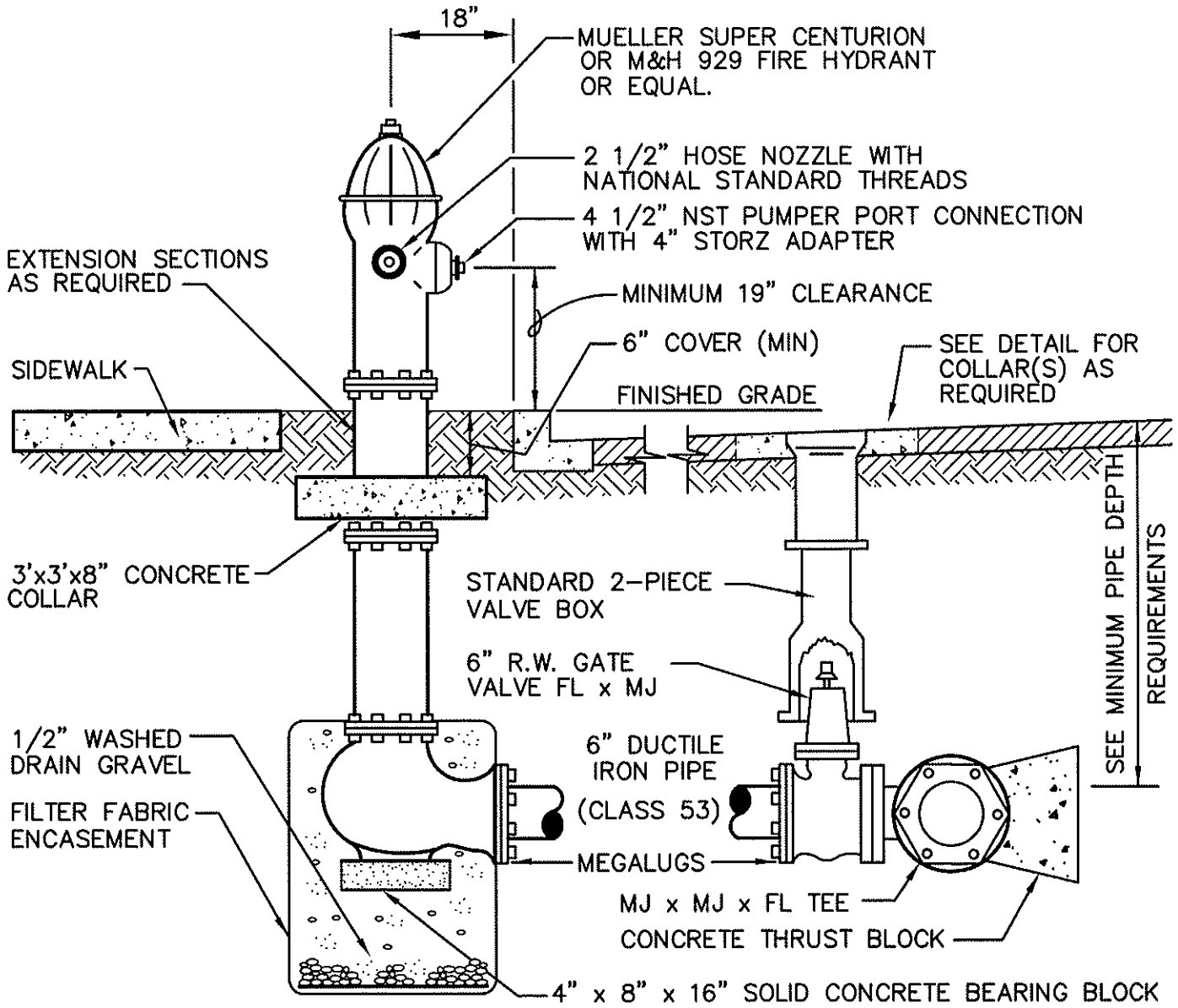

NOTES:

1. FIRE HYDRANTS TO BE PAINTED AS FOLLOWS:
   A. IF IN CITY: RUSTOLEUM SAFETY YELLOW BASE No. 288-14, COLOR CODE AX-6732, T-4432
   B. IF IN COUNTY: APPLY SNOHOMISH COUNTY P.U.D. REQUIREMENTS
2. INSTALL BLUE LANE REFLECTOR IN PAVEMENT.
3. STANDARD 4 1/2" NST PUMPER PORT CAP SUPPLIED WITH HYDRANT SHALL BE SALVAGED FOR CITY USE.
4. HYDRANTS SHALL BE MUELLER SUPER CENTURION, M&H 929 OR EQUAL UNLESS APPROVED BY CITY ENGINEER.

CITY OF GRANITE FALLS			
FIRE HYDRANT INSTALLATION (CURB, GUTTER, SIDEWALK)			
APPROVED: Warren W. Perkins 4/10/08 BY CITY DATE			DWG. NO. FIRE-HYD2
DATE: 3/2008	DRWN: M.S.	CHKD: W.P.	SCALE: NONE

L:\GRFALLS\00311 STD DETAILS\STANDARDS\FIRE-HYD2.DWG, LAYOUT1, 3/7/2008 9:56:20 AM, 1:1, BY: PERKLINS W

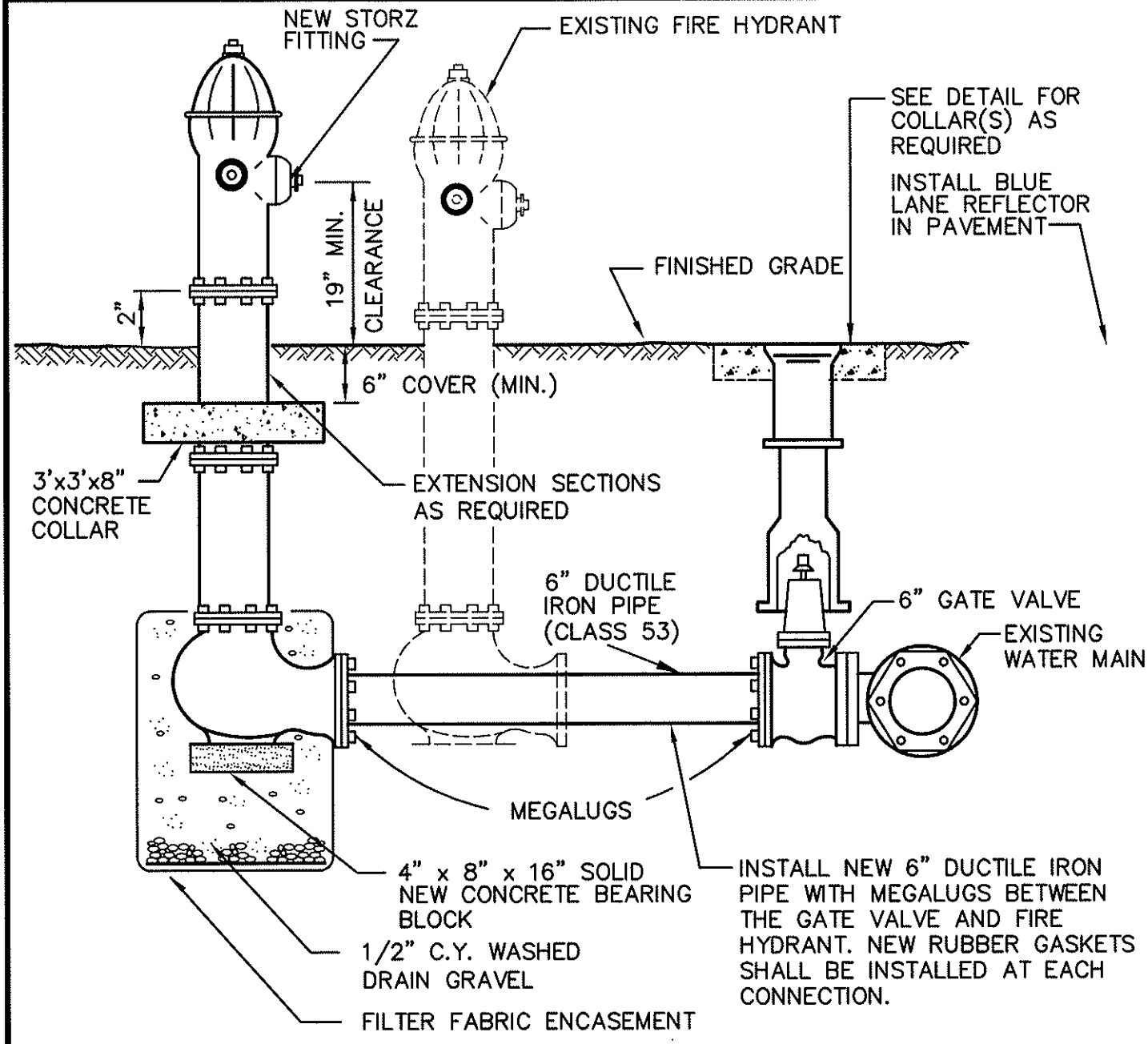

NOTES :

1. ALL RELOCATED FIRE HYDRANTS SHALL HAVE 4 1/2" PUMPER PORTS WITH STORZ ADAPTOR (DEVELOPER PROVIDE).
2. PROVIDE MIN. 3' – 0" CLEARANCE AND LEVEL AREA AROUND RELOCATED HYDRANT.
3. REPAINT FIRE HYDRANTS:
   A. IF IN CITY: RUSTOLEUM SAFETY YELLOW BASE No. 288–14 COLOR CODE AX–6732, C–24, T–4432
   B. IF IN COUNTY: APPLY SNOHOMISH COUNTY P.U.D. REQUIREMENTS.

CITY OF GRANITE FALLS			
FIRE HYDRANT RELOCATION			
APPROVED: Warren W. Perkins 4/10/08 BY CITY DATE			DWG. NO. FIRE–HYD3
DATE: 3/2008	DRWN: M.S.	CHKD: W.P.	SCALE: NONE

L:\GRFALLS\00311 STD DETAILS\STANDARDS\FIRE-HYD3.DWG, LAYOUT1, 3/7/2008 9:57:52 AM, 1:1, BY: PERKLINS W

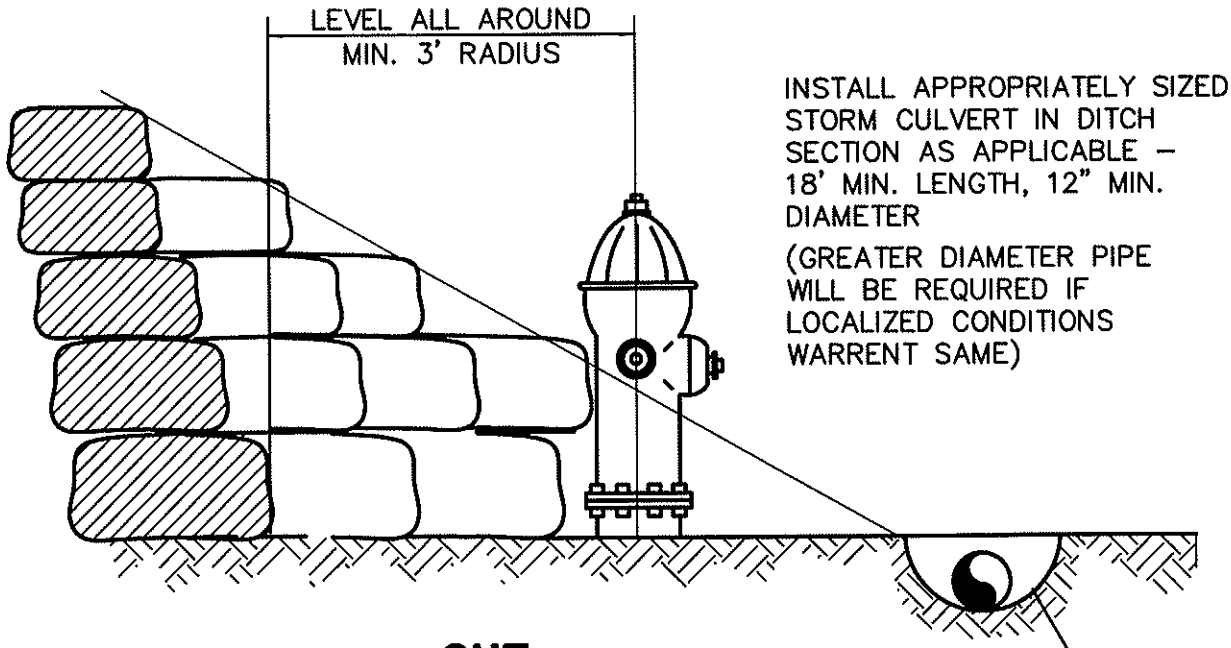

CUT

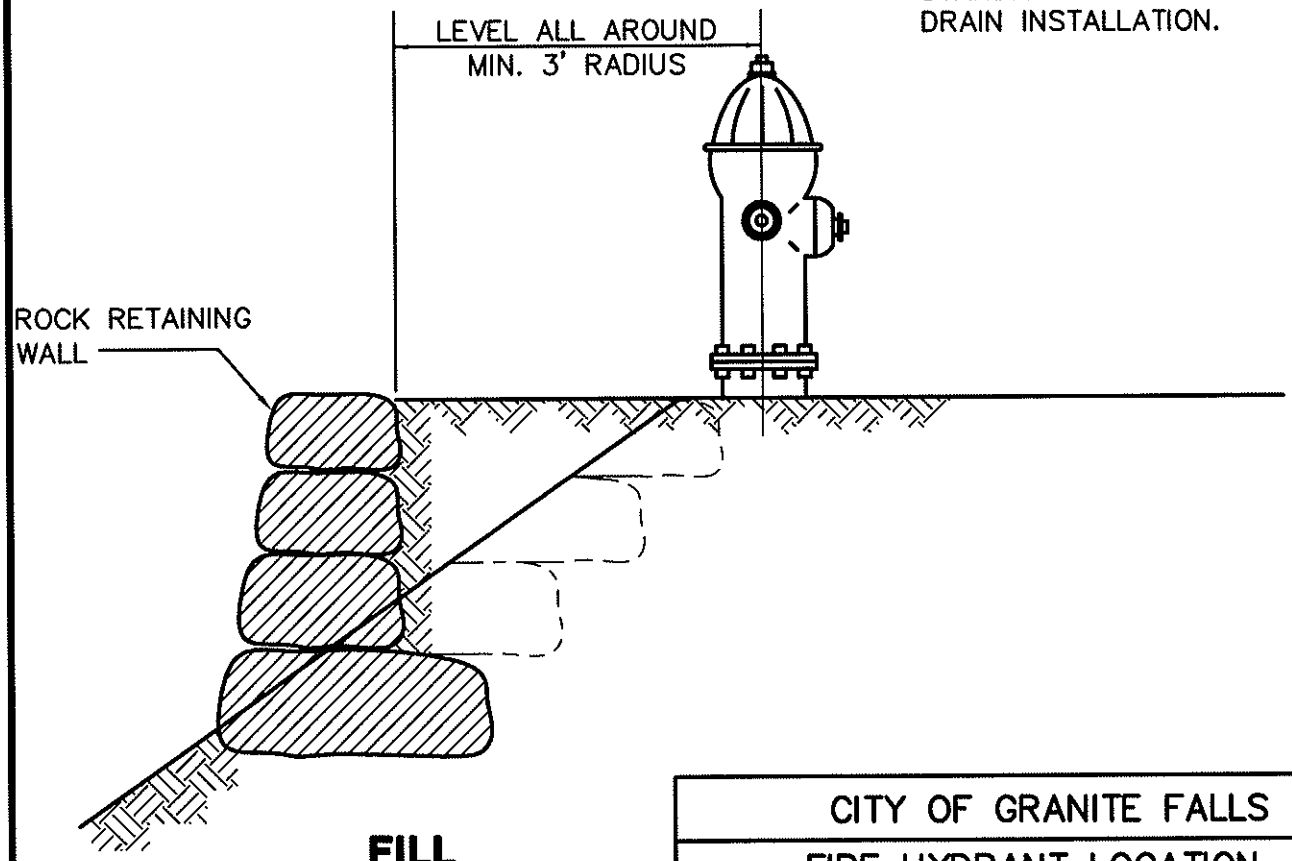

FILL

CITY OF GRANITE FALLS			
FIRE HYDRANT LOCATION IN CUT OR FILL			
APPROVED: Warren W. Perkins 4/10/08 BY CITY DATE			DWG. NO. FIRE–HYD4
DATE: 3/2008	DRWN: M.S.	CHKD: W.P.	SCALE: NONE

L:\GRFALLS\0031I STD DETAILS\STANDARDS\FIRE-HYD4.DWG, LAYOUT1, 3/25/2008 5:07:01 PM, 1:1, BY: PERKLINS W

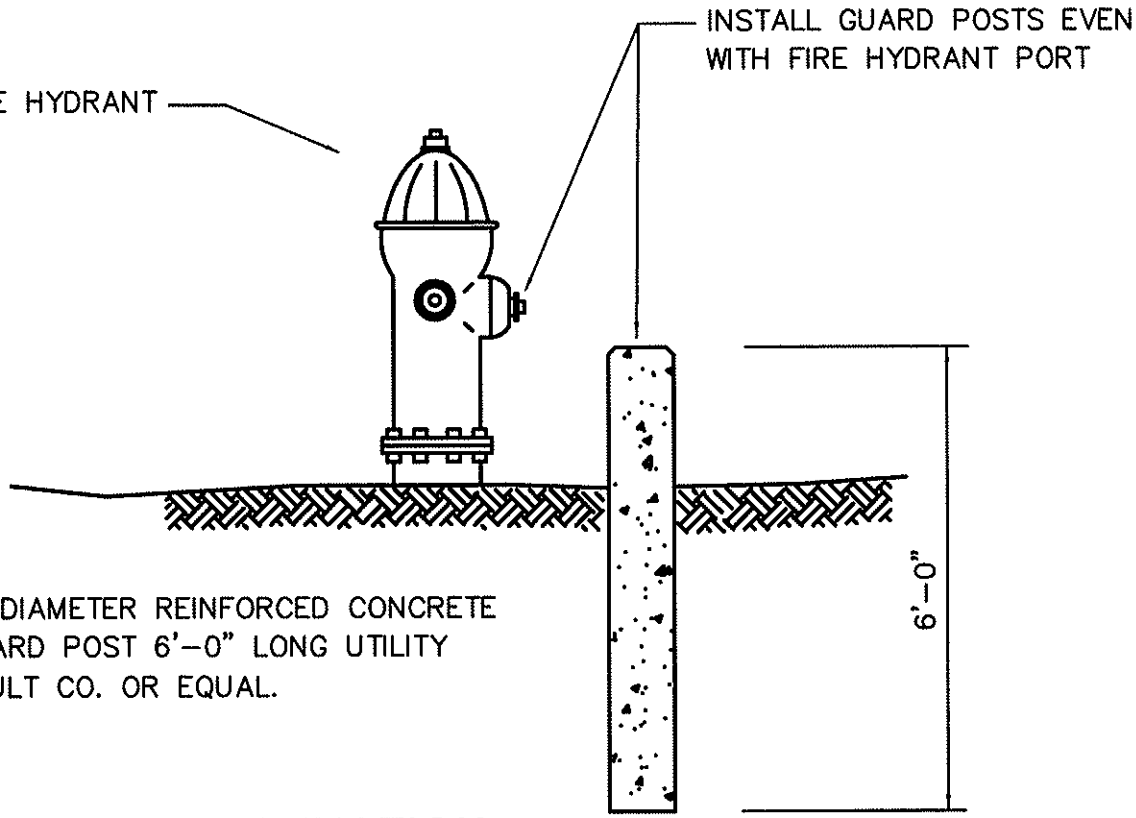

ELEVATION

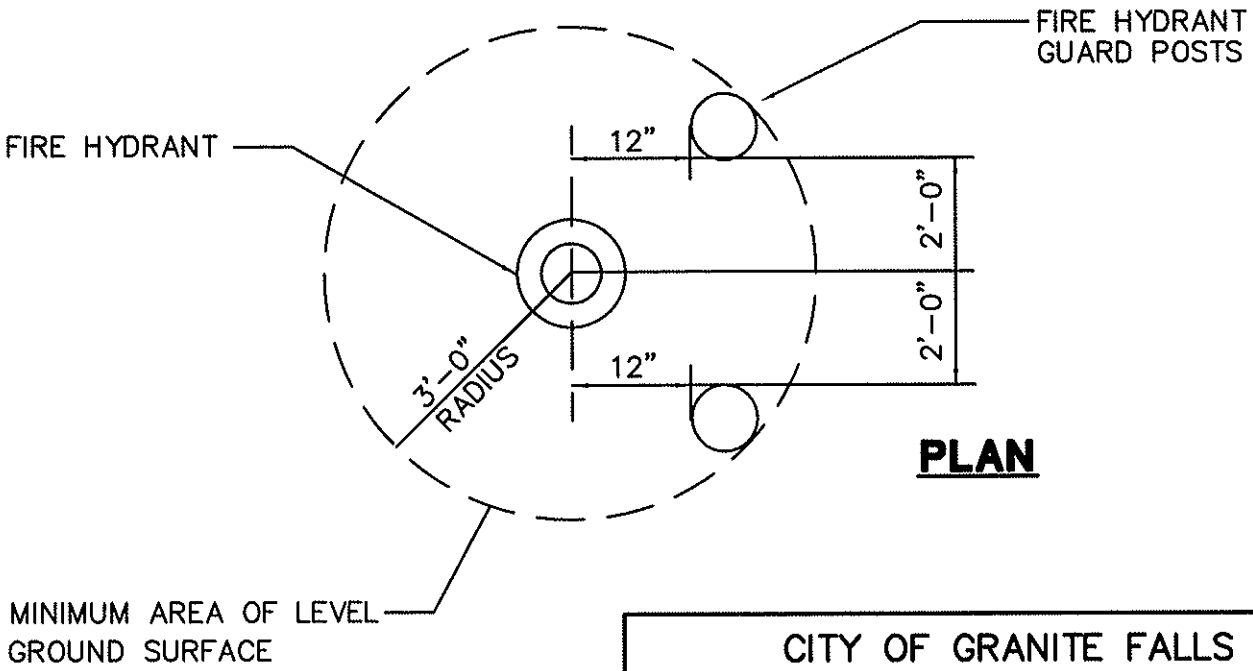

PLAN

CITY OF GRANITE FALLS			
FIRE HYDRANT GUARD POST INSTALLATION			
APPROVED: Warren W. Perkins 4/10/08 BY CITY DATE			DWG. NO. FIRE-HYD5
DATE: 3/2008	DRWN: M.S.	CHKD: W.P.	SCALE: NONE

L:\GRFALLS\0031 STD DETAILS\STANDARDS\FIRE-HYD5.DWG, LAYOUT1, 3/7/2008 10:00:39 AM, 1:1, BY: PERKLINS W

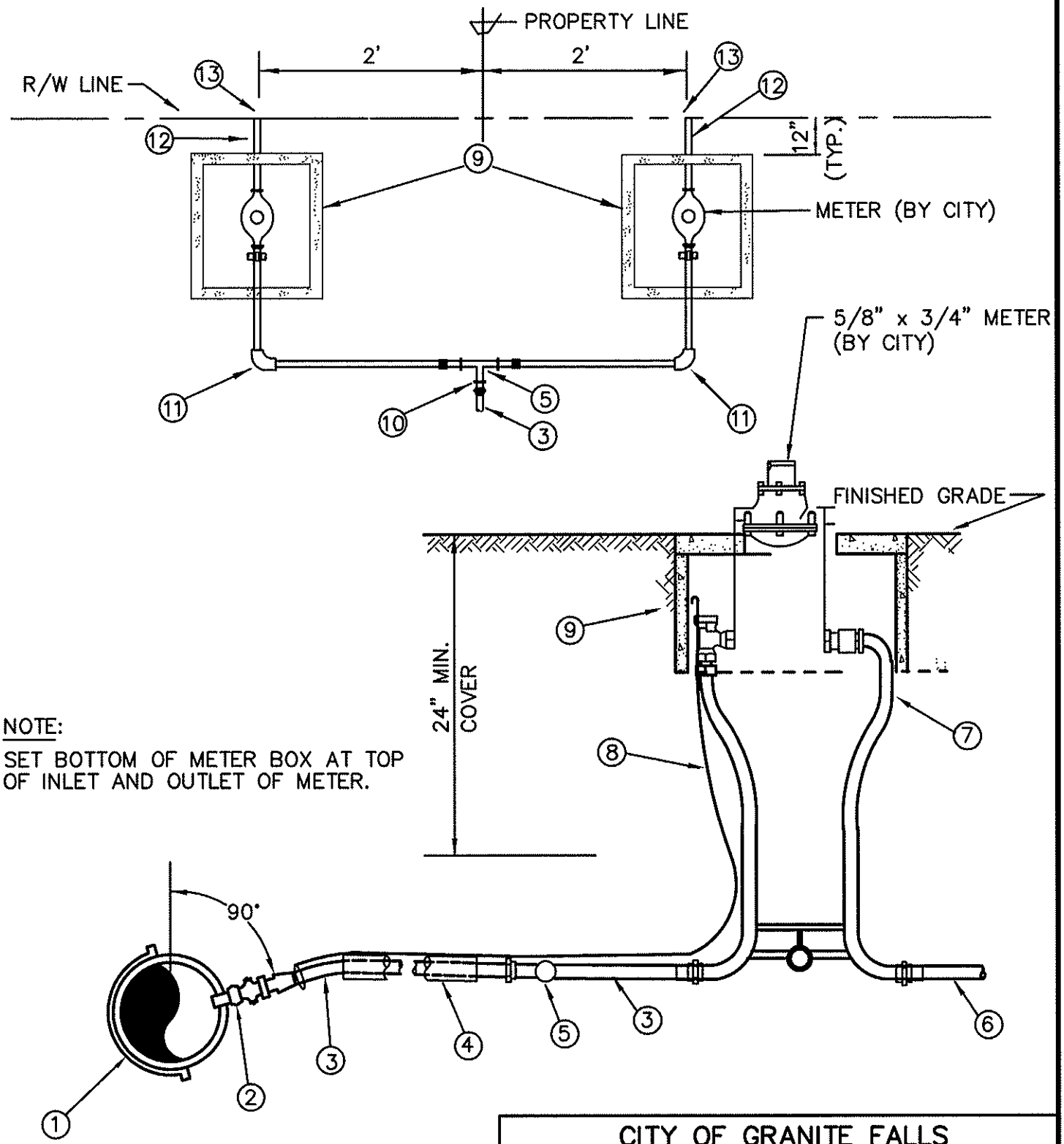

NOTE:

SET BOTTOM OF METER BOX AT TOP OF INLET AND OUTLET OF METER.

CITY OF GRANITE FALLS WATER STANDARD DETAILS			
1" AND SMALLER WATER SERVICE			
APPROVED: Warren V. Valkema 4/10/08 CITY ENGINEER DATE			DWG. NO. 1-WAT
DATE: 03/2008	DRWN: L.A.L.	CHKD: P.S.B.	SCALE: NONE

L:\GRFALLS\00311 STD DETAILS\STANDARDS\1-WAT-REV.DWG, LAYOUT1, 3/7/2008 9:49:41 AM, 1:1, BY: PERKLINS W

LEGEND

1. ROMAC SADDLE SINGLE STRAP FOR PIPE DIAMETERS LESS THAN 8" AND DIRECT THREADED TAP FOR PIPE DIAMETERS 8" OR GREATER IF DUCTILE IRON PIPE CL 52, OTHERWISE DOUBLE SADDLE STRAP.
2. 1" MIP X PEP JOINT CORP STOP EQUAL TO FORD F1101 OR EQUAL
3. 1" (DOUBLE SERVICE) OR 3/4" (SINGLE SERVICE) HIGH MOLECULAR (200 PSI, SDR 7) "POLY" PIPE (PEP) IRON PIE SIZE
4. INSTALL SERVICE LINE IN 2" PVC GUARD PIPE (SCH-80) WHEN CROSSING ROADWAY (3' MINIMUM BEYOND AND BENEATH PAVEMENT SECTION)
5. 1 X 3/4" X 3/4" BRASS TEE (IF REQUIRED)
6. 3/4" PEP, IRON PIPE SIZE
7. COPPER SETTER MUELLER P-2542 OR FORD VB72-12W-66-33 INCLUDING ANGLE BALL VALVE
8. 10 GAUGE WIRE FROM MAINLINE TAP TO METER BOX AND EXPOSE 12" MINIMUM IN BOX (RUN INSIDE 2" PVC GUARD CONDUIT WHERE APPLICABLE)
9. METER BOX - FOGTITE NO.9 WITH HINGED LID DRILLED FOR TRPL HOLE FOR TOUCH READ METERS, H20 LOADING. (SET FLUSH WITH FINISHED GRADE)
10. 1" MIP x PEP JOINT ADAPTER EQUAL TO FORD T444 SERIES OR EQUAL
11. 3/4" STREET ELL, FORD L66 SERIES OR EQUAL
12. 3/4" BRASS NIPPLE (LENGTH AS REQUIRED)
13. PROVIDE APPROVED WATERTIGHT PLUG UNTIL CONNECTION TO PRIVATE SYSTEM IS MADE.

CITY OF GRANITE FALLS			
1" AND SMALLER WATER SERVICE			
APPROVED: Warren W. Perkins 5/20/08 BY CITY DATE			DWG. NO. 1-WAT
DATE: 3/2008	DRWN: M.S.	CHKD: W.P.	SCALE: NONE

L:\GRFALLS\0031I STD DETAILS\STANDARDS\I-WAT-REV.DWG, LAYOUT1, 5/20/2008 4:49:27 PM, 1:1, BY: W PERKINS

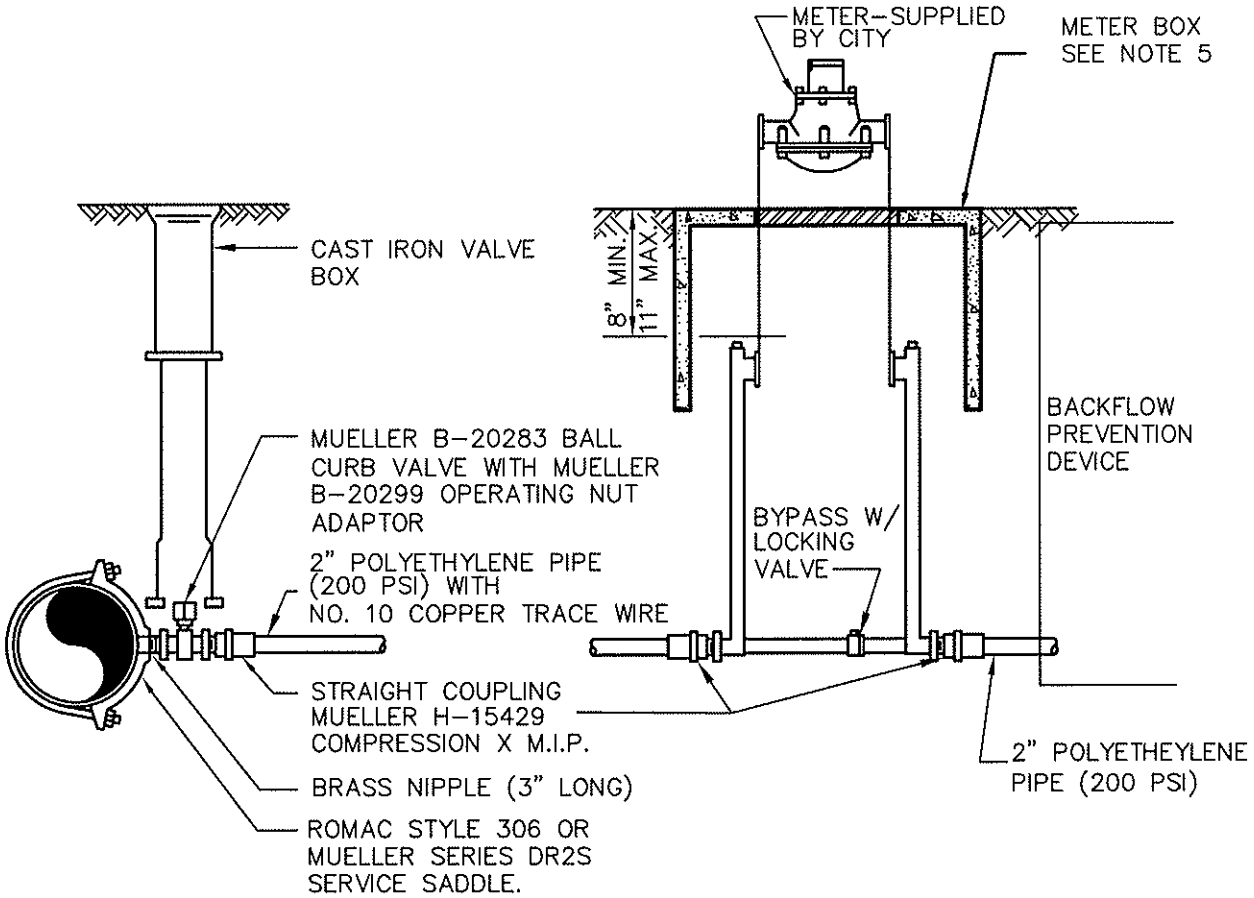

NOTES:

1. POLYETHYLENE PIPE SHALL HAVE NO. 8 COPPER TRACE WIRE WITH THHN BLUE PLASTIC INSULATION.
2. SERVICE FROM METER BOX TO STRUCTURE BY PROPERTY OWNER.
3. INDIVIDUAL SERVICES REQUIRED FOR EACH STRUCTURE.
4. METER SETTER MUELLER H-1423 OR FORD 70 SERIES. WITH LOCKING BYPASS.
5. METER BOX – FOGTITE NO.2 WITH STEEL LID AND DRILLED FOR TRPL HOLE FOR TOUCH READ. BOX SHALL BE H-20 LOAD RATED WHERE REQUIRED.
6. ESMT PROVIDED TO CITY TO AND AROUND METERS LOCATED OUTSIDE R/W.
7. ALL SERVICES SHALL HAVE WASHINGTON STATE APPROVED RPBA FOR BACKFLOW PREVENTION. CONFIRM LOCATION OF ASSEMBLY WITH CITY. INITIAL AND ANNUAL TEXTING REQUIRED. MULTIFAMILY ALLOWED TO USE DCVA IN LIEU OF RPBA.

CITY OF GRANITE FALLS			
1 1/2" & 2" WATER SERVICE			
APPROVED: Warren W. Perkins 4/10/08 BY CITY DATE			DWG. NO. 2-WAT
DATE: 3/2008	DRWN: M.S.	CHKD: W.P.	SCALE: NONE

L:\GRFALLS\00311 STD DETAILS\STANDARDS\2-WAT-REV.DWG, LAYOUT1, 3/6/2008 11:39:04 AM, 1:1, BY: PERKLINS W

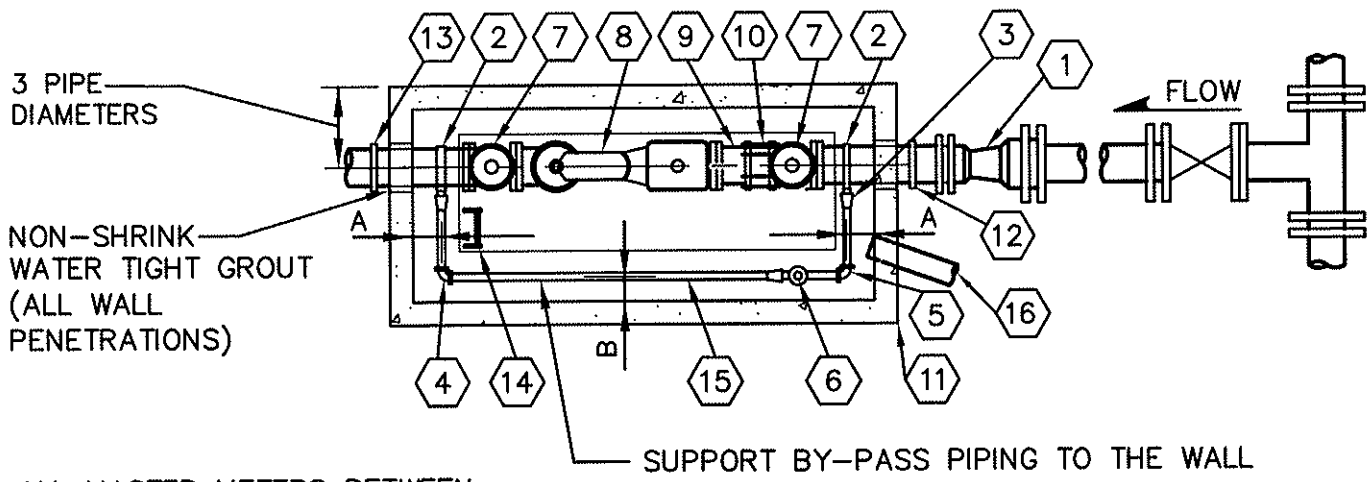

ALL MASTER METERS BETWEEN THE CITY AND THE PUD SHALL BE APPROVED BY THE PUD.

PLAN

1. REDUCER, M.J.
2. SINGLE STRAP SERVICE CLAMP, ROMAC 101 WITH IPS TAP, OR EQUAL (1 1/2" OR 2" BYPASS, 4-INCH AND LARGER BYPASS REQUIRES D.I. TEE).
3. FITTINGS AS REQUIRED.
4. BEND CPLG COPPER TO COPPER MUELLER H-15525, OR EQUAL.
5. BEND CPLG, COPPER TO OUTSIDE I.P. THREAD MUELLER H-15530, OR EQUAL.
6. BALL VALVE WITH PADLOCK WING OR LOCK CAP, FORD B21-444W OR B21-666 WITH LOCK CAP OR B21-777 WITH LOCK CAP. SIZED TO LINE.
7. RESILIENT SEAT GATE VALVE, FL X FL SIZED TO METER.
8. 3" TO 10" SENSUS METER FOR IRRIGATION SERVICES AND 3" TO 10" COMPOUND METER IF FOR DOMESTIC SERVICE. READ IN CUBIC FEET WITH MXU RADIO UNIT AS SPECIFIED BY DISTRICT SHALL BE FURNISHED AND INSTALLED BY CONTRACTOR.
9. D.I. PIPE SPOOL FL X PE LENGTH TO FIT.
10. FL CPLG. ADAPT.
11. PRECAST CONCRETE VAULT, UTILITY VAULT OR EQUAL, SEE PAGE 2 FOR SIZING AND REQUIREMENTS.
12. MEGA-LUG FOLLOWER INSTALLED ON INFLOW SIDE OF VAULT WITH CONCRETE THRUST BLOCK OR SHACKLE TO THRUST BLOCK TO PREVENT MOVEMENT IF METER IS REMOVED. (BLOCK NOT SHOWN)
13. DIELECTRIC CPLG. TO BUILDING SERVICE. SIZE AS REQUIRED.
14. GALV. STEEL OR ALUMINUM LADDER. SECURE TO VAULT LID AND FLOOR. COORDINATE LOCATION FOR ACCESS.
15. BY-PASS (SIZE BY TABLE BELOW).
16. 4" PVC TO CATCH BASIN OR DAYLIGHT. WHERE GRAVITY DRAIN IS NOT FEASIBLE, PROVIDE SUMP, ELECTRICAL SERVICE AND PUMP WITH DISCHARGE TO SURFACE DRAIN. PUMP SHALL BE 1/2 HP ZOELLER M-53, WITH CHECK VALVE ON DISCHARGE LINE.
17. ALL PIPES AND FITTTINGS 4-INCH OR LARGER SHALL BE DI., CL 52.

METER SIZE	MAIN-LINE	BYPASS	A	B
3"	4" DI.	2" COPPER	9"	4"
3"	4" DI.	2" COPPER	9"	4"
4"	6" DI.	4" DI.	9"	4"
6"	8" DI.	4" DI.	14"	6"
8"	10" DI.	8" DI.	16"	6"

NOTES:
SEE PAGE 2 FOR ELEVATION AND NOTES.

CITY OF GRANITE FALLS

METER AND METER VAULT ASSEMBLY 3" THROUGH 10"

APPROVED: Warren W. Perkins 4/10/08
BY CITY DATE

DWG. NO. 3-MM

DATE:	DRWN:	CHKD:	SCALE:
3/2008	M.S.	W.P.	NONE

L:\GRFALLS\0031I STD DETAILS\STANDARDS\3MM.DWG, LAYOUT1, 4/8/2008 3:42:53 PM, 1:1, BY: W PERKINS

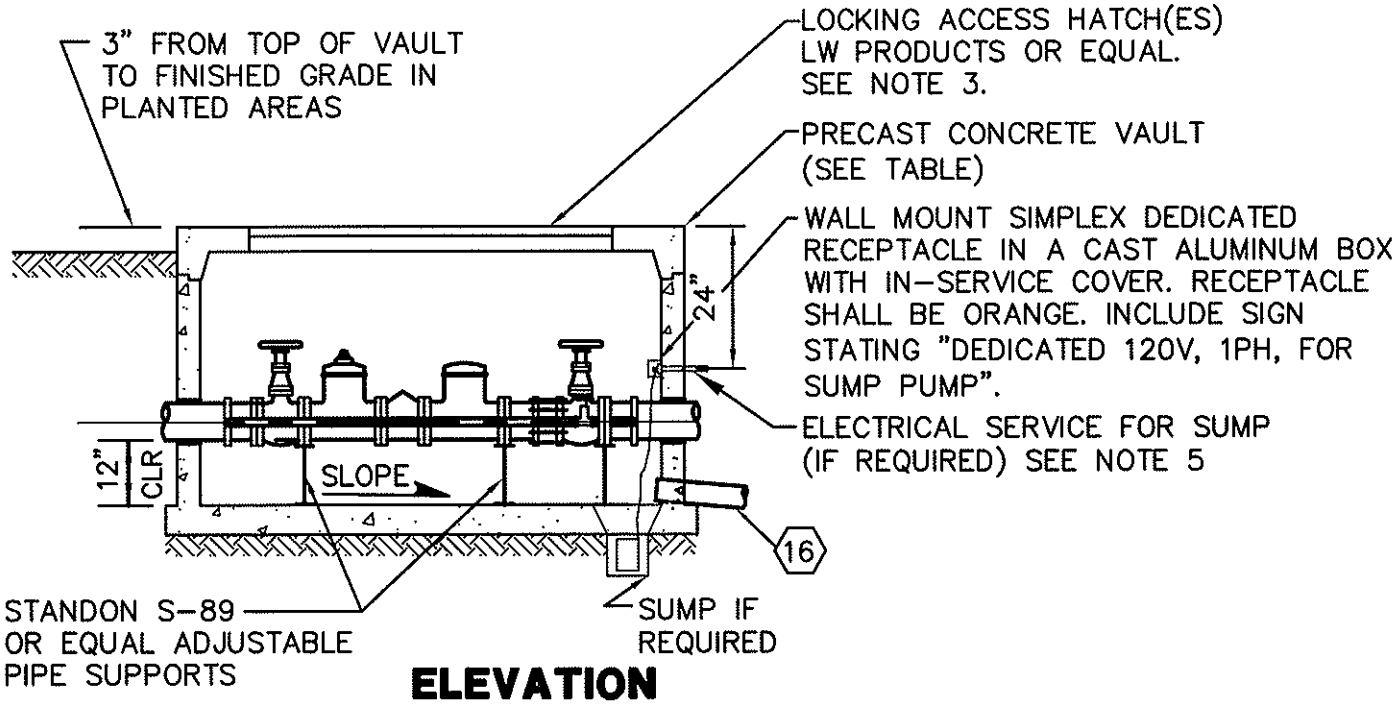

ELEVATION

SEE DETAIL V-W16A FOR CALLOUTS

METER SIZE	MAIN-LINE	MINIMUM I/S VAULT DIM. L	x W	x H	UTILITY VAULT CO APPROVED MODEL	MIN. HATCH OPENING
3"	4" DI.	8'-4"	4'-4"	3'-4"	4484-LA	3' x 6'
4"	4" DI.	8'-4"	4'-4"	3'-4"	4484-LA	3' x 6'
6"	6" DI.	10'-6"	5'-0"	6'-2"	5106-LA	3' x 6'
8"	8" DI.	12'-0"	6'-0"	6'-6"	612-LA	3' x 6'
10"	10" DI.	14'-0"	8'-0"	6'-6"	814-LA	3' x 6'

NOTES:

1. WASHINGTON STATE APPROVED REDUCED PRESSURE BACKFLOW PREVENTOR REQUIRED. SEE RPBA-2. CONFIRM INSTALLATION WITH CITY. INITIAL AND ANNUAL TEST REQUIRED.
2. METER SHALL BE INSTALLED SUCH THAT IT CAN BE READ WITHOUT ENTERING VAULT WITH ACCESS HATCH OPEN.
3. COORDINATE ORIENTATION OF HATCH(ES) TO PROVIDE CLEAR VERTICAL ACCESS TO METER ASSEMBLY, AND WITH LADDER LOCATION. VERIFY WITH DISTRICT.
4. DRAIN DRAIN HATCH(ES) TO VAULT FLOOR WITH PVC PIPE AND FITTINGS.
5. 3/4" (MINIMUM) PVC SCH-40 CONDUIT. WIRING SHALL BE COMPLETELY SEALED 120V, UNDER GROUND. CONTRACTOR TO SEAL CONDUIT PENETRATION WITH NON-SHRINK GROUT. (NOT REQUIRED IF GRAVITY VAULT DRAIN PROVIDED).
6. ESMT TO BE PROVIDED TO CITY AROUND METERS LOCATED OUTSIDE RIGHT-OF-WAY.
7. SEE PAGE 1 FOR PLAN AND NOTES.

CITY OF GRANITE FALLS			
METER AND METER VAULT ASSEMBLY 3" THROUGH 10"			
APPROVED: Warren W. Perkins 4/10/08 BY CITY DATE			DWG. NO. 3-MM
DATE: 3/2008	DRWN: M.S.	CHKD: W.P.	SCALE: NONE

L:\GRFALLS\00311 STD DETAILS\STANDARDS\3MM.DWG, LAYOUT1, 4/8/2008 3:43:18 PM, 1:1, BY: W PERKINS

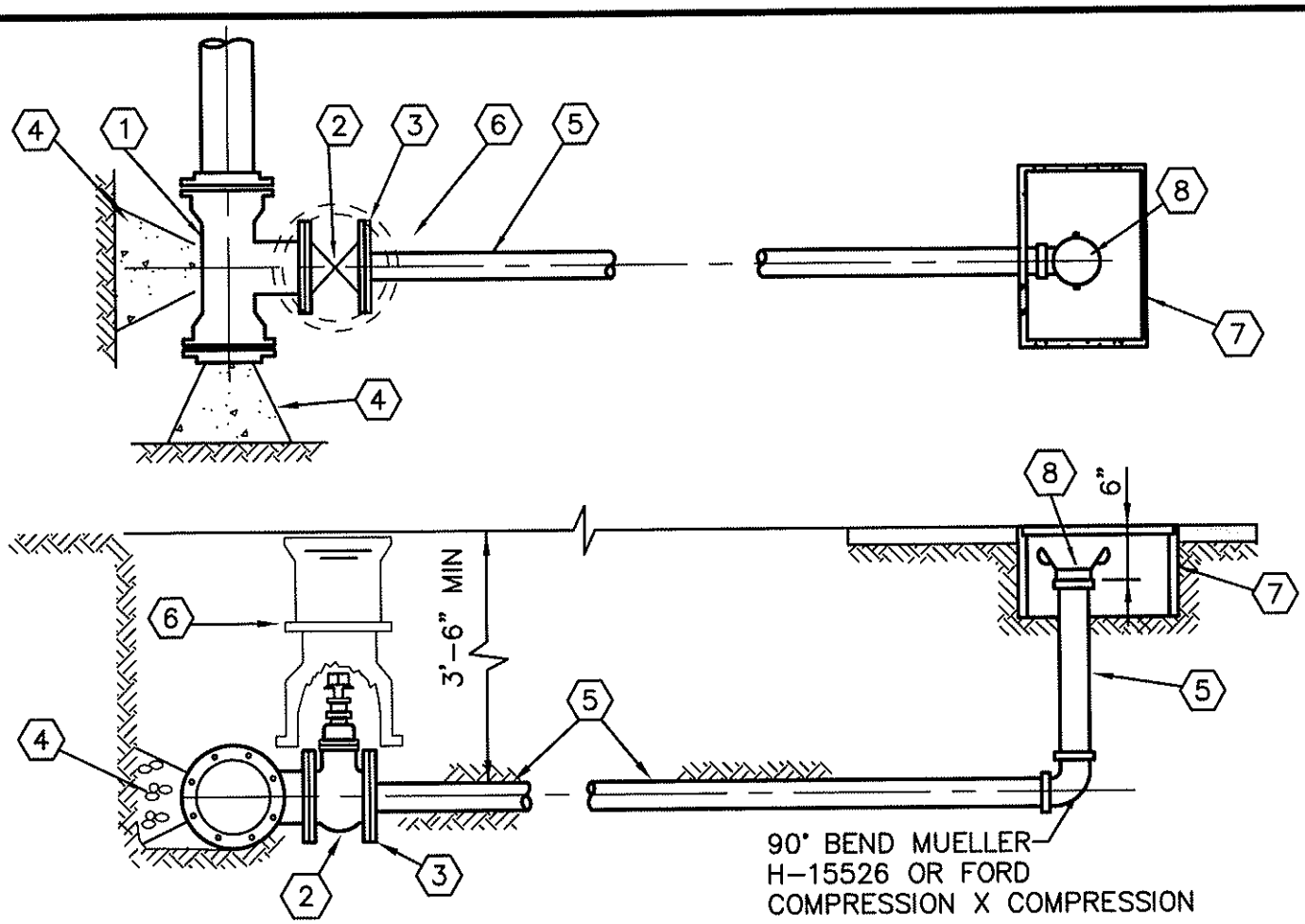

1. MJ X MJ X 4" FL D.I. TEE.
2. 4" AWWA RESILIENT SEAT GATE VALVE, FL X FL, WITH OPERATING NUT.
3. 4" BLIND FLANGE, TAPPED FOR 2" FOR 6" AND 8" MAINS. MAINS LARGER THAN 8" SHALL END IN A FIRE HYDRANT.
4. CONCRETE THRUST BLOCK.
5. 2" TYPE K COPPER PIPE.
6. CAST IRON VALVE BOX PER VB-1
7. METER BOX. BERG VAULT CO. OF WASH NO. 2 CONCRETE OR FOGTITE NO. 9. BOX SHALL BE H-20 LOAD RATED.
8. ALUMINUM CAM-LOCK AND CAP. DRILL 1/8" HOLE IN CAP. (PLASTIC CAM LOCK FITTING NOT ALLOWED)

NOTES

1. INSTALL DIELECTRIC COMPOUNDS FOR SEPARATION AT DISSIMILAR METALS.

CITY OF GRANITE FALLS			
2" BLOW-OFF ASSEMBLY			
APPROVED: Warren W. Perkins 4/10/08 BY CITY DATE			DWG. NO. BLOW-OFF
DATE: 3/2008	DRWN: M.S.	CHKD: W.P.	SCALE: NONE

L:\GRFALLS\0031I STD DETAILS\STANDARDS\BLOW-OFF.DWG, LAYOUT1, 4/8/2008 3:45:31 PM, 1:1, BY: W PERKINS

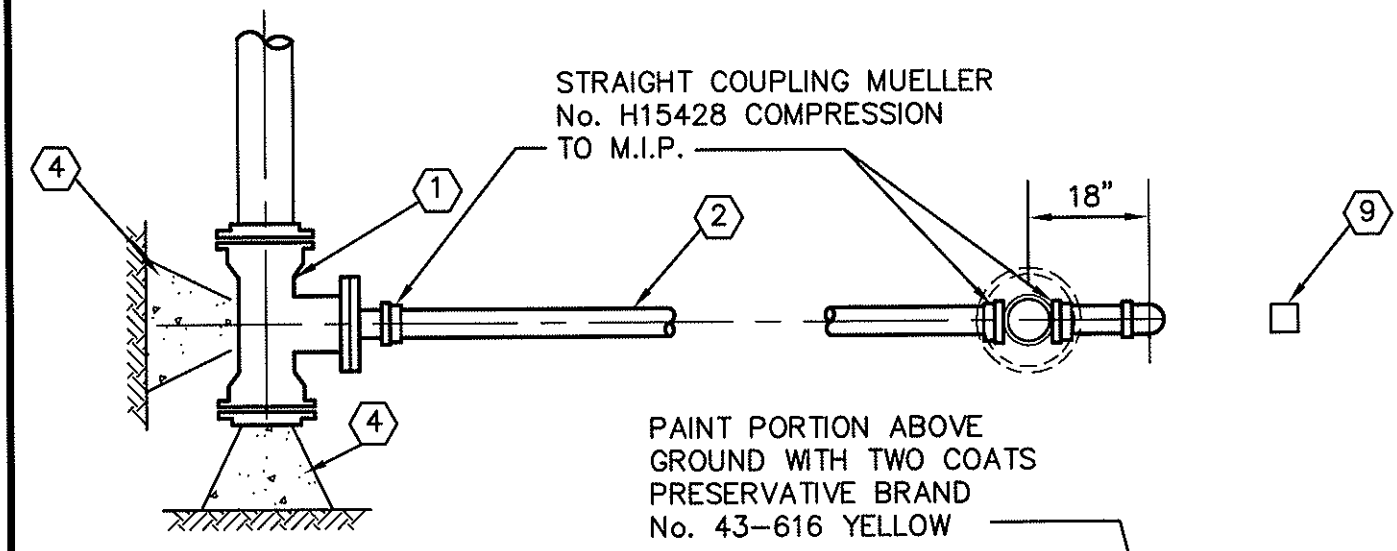

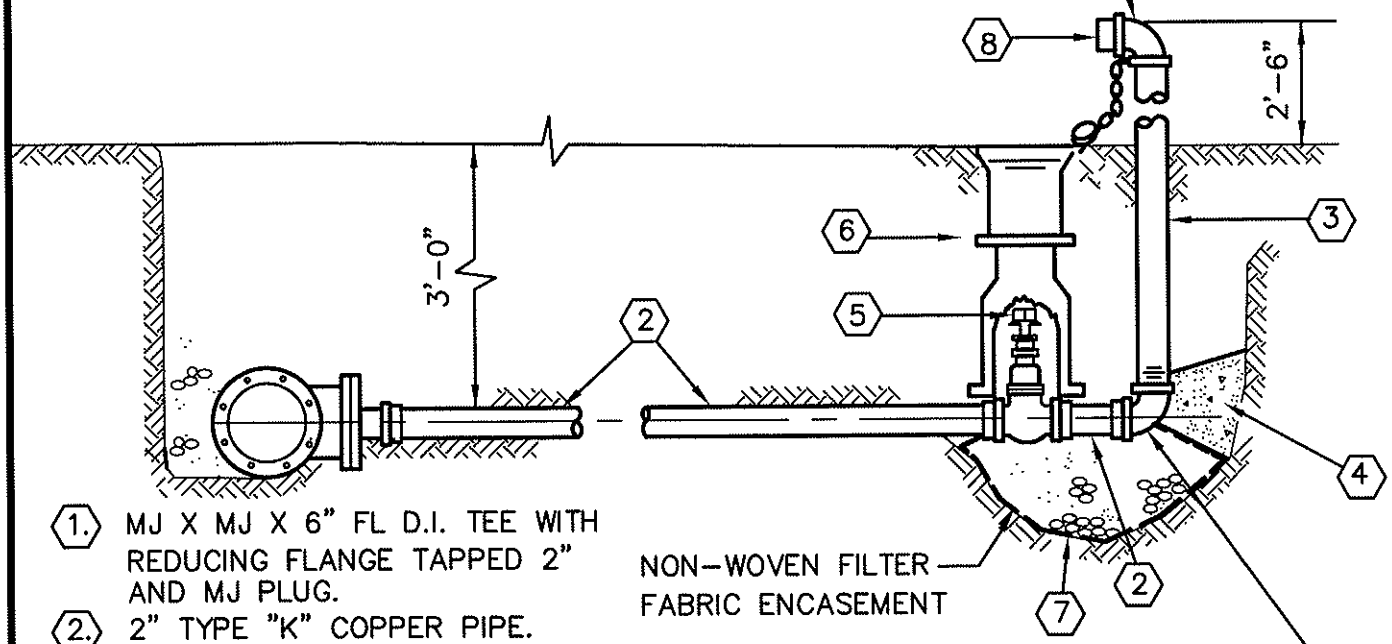

1. MJ X MJ X 6" FL D.I. TEE WITH REDUCING FLANGE TAPPED 2" AND MJ PLUG.
2. 2" TYPE "K" COPPER PIPE.
3. 2" GALVANIZED IRON PIPE.
4. CONCRETE THRUST BLOCK.
5. 2" AWWA RESILIENT SEAT GATE VALVE, THD X THD, WITH OPERATING NUT.
6. CAST IRON VALVE BOX
7. 1/4 CUBIC YARD WASHED GRAVEL POCKET.
8. 2" x 2-1/2" HOSE THREADS BRASS INSERT WITH CAP AND CHAIN
9. VALVE MARKER POST

NOTES

1. TURN NOZZEL TOWARDS ROADSIDE DITCH
2. INSTALL DIELECTRIC COUPLINGS AT DISSIMILAR METALS.
3. TEMPORARY BLOWOFFS INSTALLED FOR FLUSHING WATERMAIN SHALL BE SIZED TO PROVIDE 2.5fps VELOCITY IN MAIN LINE.

CITY OF GRANITE FALLS			
PERMANENT END-LINE BLOW OFF ASSEMBLY			
APPROVED: Warren W. Perkins 4/10/08 BY CITY DATE			DWG. NO. BLOW-OFF2
DATE: 3/2008	DRWN: M.S.	CHKD: W.P.	SCALE: NONE

L:\GRFALLS\0031I STD DETAILS\STANDARDS\BLOW-OFF2.DWG, LAYOUT1, 4/8/2008 3:42:27 PM, 1:1, BY: W PERKINS

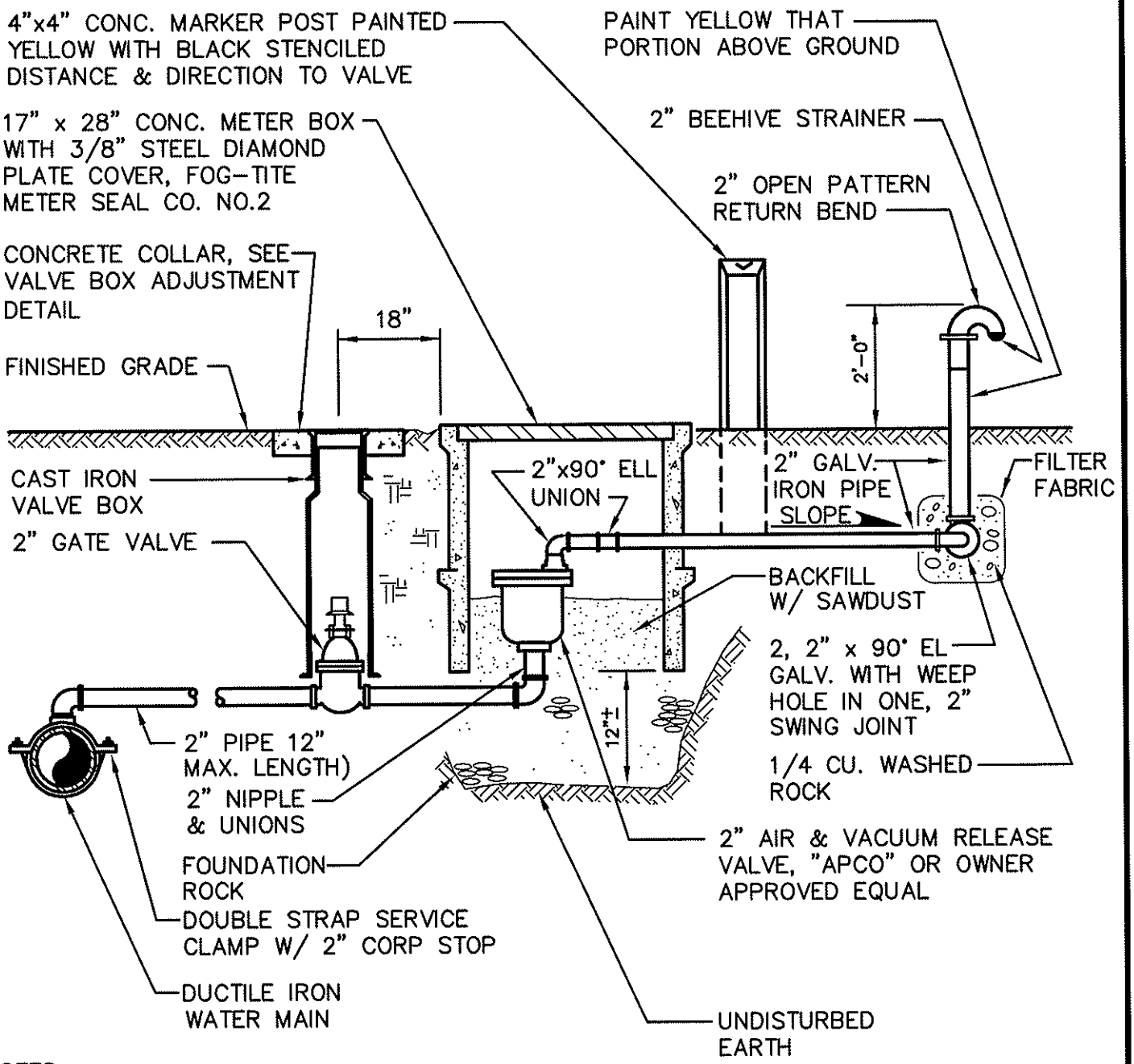

NOTES:

1. GATE VALVE: AWWA RESILIENT SEAL, THRD x THRD WITH OPERATING NUT
2. ALL PIPING BETWEEN DOUBLE STRAP SADDLE AND INLET SIDE OF COMBINATION AIR & VAC ASSEMBLY SHALL BE BRASS
3. TAP MAIN AT SYSTEM HIGH POINT. LOCATION TO BE APPROVED BY THE CITY
4. PAINT PORTION ABOVE GROUND WITH TWO COATS PRESERVATIVE BRAND No. 43-616 YELLOW

CITY OF GRANITE FALLS			
AIR & VACUUM RELEASE ASSEMBLY			
APPROVED: Warren W. Perkins 4/10/08 BY CITY DATE			DWG. NO. AIR-RLS
DATE: 3/2008	DRWN: M.S.	CHKD: W.P.	SCALE: NONE

L:\GRFALLS\00311 STD DETAILS\STANDARDS\AIR-RLS.DWG, LAYOUT1, 4/8/2008 3:46:41 PM, 1:1, BY: W PERKINS

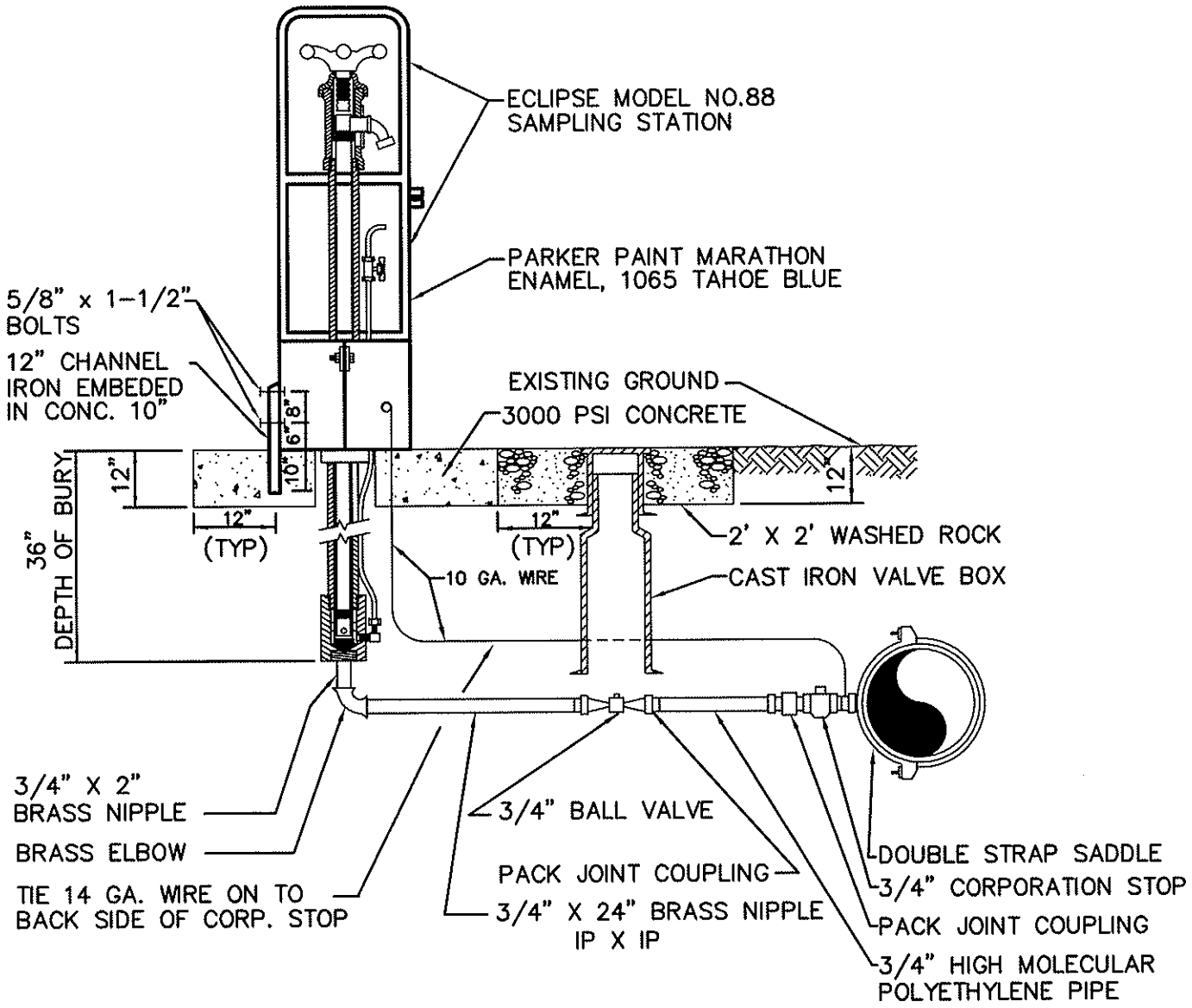

CITY OF GRANITE FALLS			
WATER SAMPLING STATION			
APPROVED: Warren D. Perkins 4/10/08 BY CITY DATE			DWG. NO. WAT-SAMP
DATE: 3/2008	DRWN: M.S.	CHKD: W.P.	SCALE: NONE

L:\GRFALLS\0031I STD DETAILS\STANDARDS\WAT-SAMP.DWG, LAYOUT1, 4/8/2008 3:47:33 PM, 1:1, BY: W PERKINS

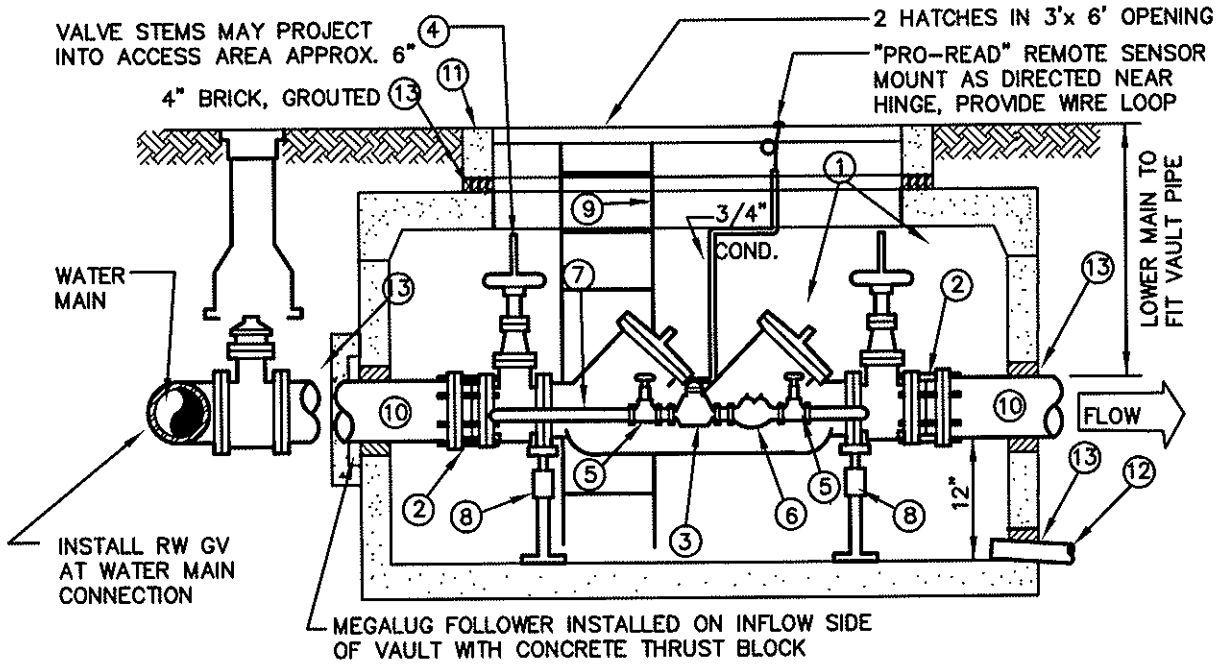

NO.	DESCRIPTION
1	STATE APPROVED DOUBLE CHECK DETECTOR ASSEMBLY (DCDA) BACKFLOW PREVENTION ASSEMBLY WITH O.S.&Y. R.W. GATE VALVE
2	ROMAC STYLE 'FCA 501' FLANGED COUPLING ADAPTER
3	5/8" x 3/4" SENSUS CUBIC FEET READING METER COMPLETE WITH SPUD NUT
4	LOCATE CENTER OF VALVE 15" FROM CENTER OF VAULT TO ALLOW STEMS TO EXTEND INTO ACCESS OPENING WHEN APPLICABLE
5	3/4" SHUTOFF VALVE; BRASS GATE VALVE
6	STATE APPROVED 3/4" DOUBLE CHECK VALVE ASSEMBLY (DCVA)
7	BRASS OR TYPE K COPPER, DETECTOR CHECK PIPING (BY PASS LINE)
8	2 EA. GALVANIZED ADJUSTABLE STANCHIONS (LOCATE AT ENDS OF DOUBLE CHECK ASSEMBLY)
9	GALVANIZED STEEL LADDER, LOCATE AS DIRECTED BY DISTRICT, SECURE TO VAULT.
10	PIPE SPOOL, CL. 52 D.I., PLAIN END
11	"UTILITY VAULT" OR APPROVED EQUAL WITH 4" BRICK AND ADJUSTABLE COVER; ACCESS HATCHES: TWO #332P, EXCEPT 3 HATCHES FOR 10" DCDA 4" DCDC, USE 575LA + 57AT (4'-2" x 6'-6" x 4'-0" INSIDE 6" DCDC, 4484 LA + 57AT (4'-4" x 8'-4" x 6'-2" INSIDE 6" DCDC, 5106 LA + 57AT (5'-0" x 10'-6" x 4'-4" INSIDE 8" DCDC, 5106 LA + 57 AT (5'-0" x 10'-6" x 6'-2" OR 4'-4" INSIDE 10" DCDC, 5106 LA + 5106 AT (3HATCH) (5'-0" x 10'-6" x 6'-2" OR 4'-4")
12	6" PVC DRAIN, DISCHARGE TO DAYLIGHT OR TO CATCH BASIN. MINIMUM SLOPE 1% UNLESS OTHERWISE APPROVED. ADD SCREENS AT BOTH ENDS.
13	WATERTIGHT GROUT, INLET AND OUTLET PIPE, DRAIN PIPE AND BRICK ACCESS OPENING

NOTE:

AFTER PRESSURE TEST AND PURITY SAMPLES ARE RECIEVED, A CERTIFED BACKFLOW TECHNICIAN SHALL SUPPLY DISTRICT WITH A WRITTEN TEST REPORT ON EACH BACKFLOW ASSEMBLY.

CITY OF GRANITE FALLS			
DOUBLE-CHECK DETECTOR BACKFLOW PREVENTION ASSEMBLY			
APPROVED: Warren W. Perkins 4/10/08 BY CITY DATE			DWG. NO. DCD-BPA
DATE: 3/2008	DRWN: M.S.	CHKD: W.P.	SCALE: NONE

L:\GRFALLS\003II STD DETAILS\STANDARDS\DCD-BPA.DWG, LAYOUT1, 4/8/2008 3:50:07 PM, 1:1, BY: W PERKINS

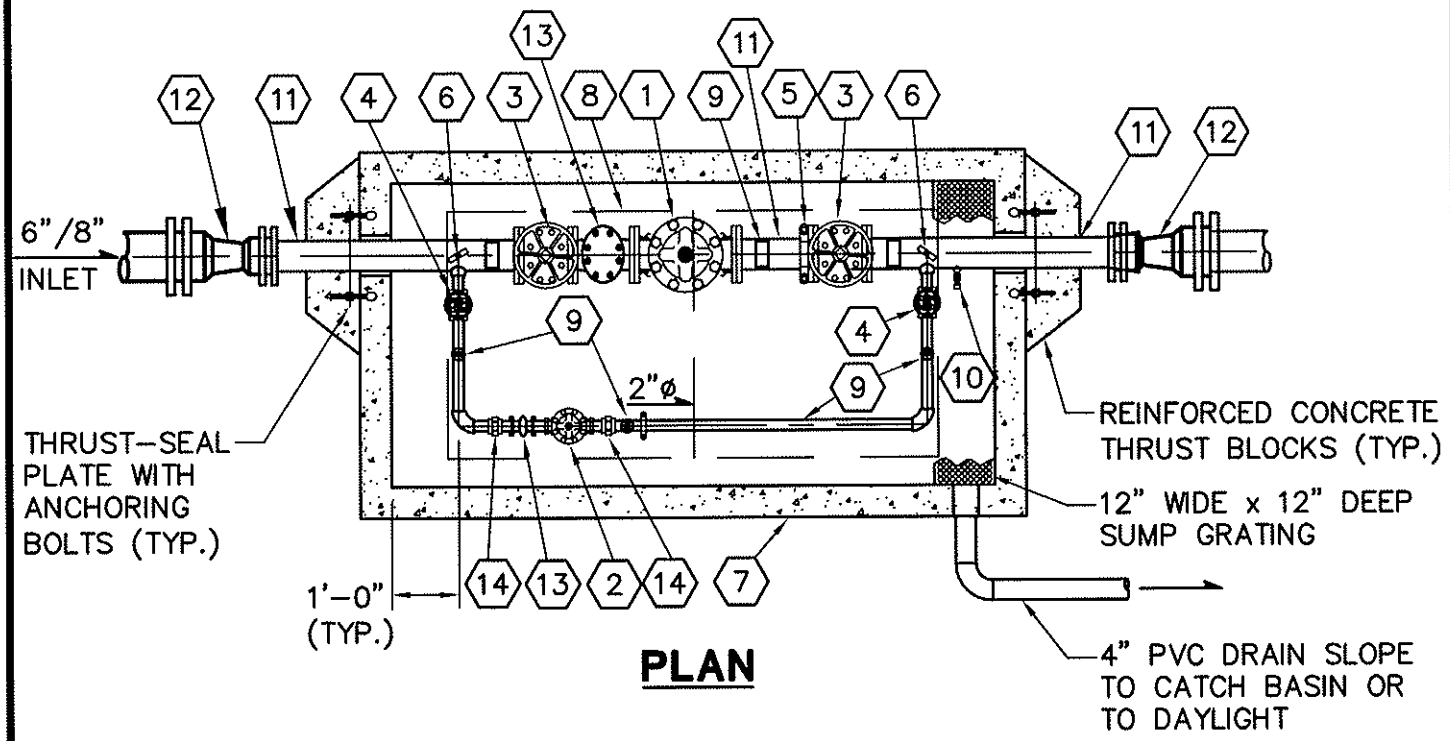

PLAN

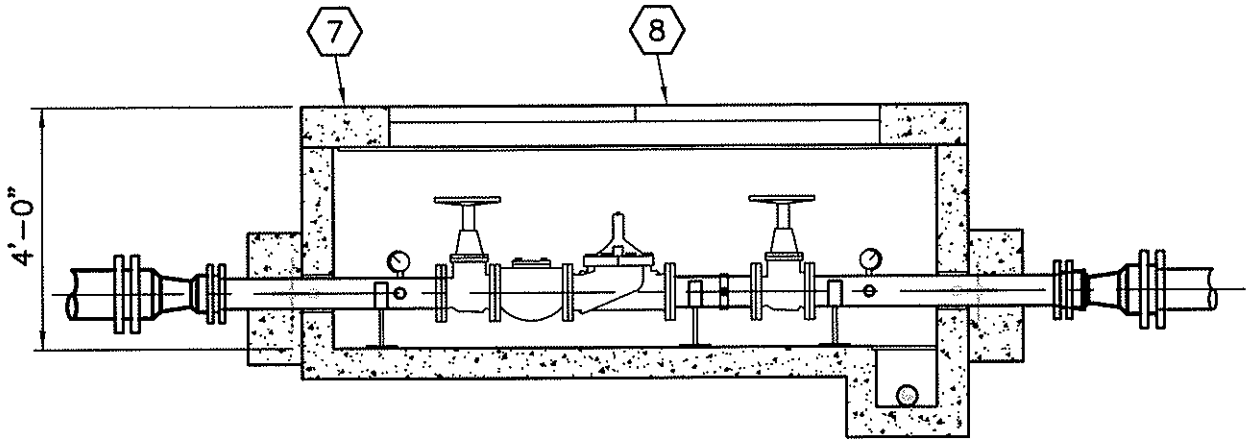

SECTION

NOTE:
ALTERNATE TO FIELD ASSEMBLED PRV AND VAULT IS SYSTEM AS MANUFACTURED BY GC SYSTEMS.

SEE PAGE 2 FOR CALLOUTS AND NOTES

CITY OF GRANITE FALLS			
PRESSURE REDUCING STATION (1 of 2)			
APPROVED: Warren W. Perkins 4/10/08 BY CITY DATE			DWG. NO. PRSD
DATE: 3/2008	DRWN: M.S.	CHKD: W.P.	SCALE: NONE

L:\GRFALLS\00311 STD DETAILS\STANDARDS\PRSD.DWG, LAYOUT1, 4/8/2008 4:41:46 PM, 1:1, BY: W PERKINS

PRESSURE REDUCING STATION

(TO BE SIZED BY CITY)

LEGEND - SEE PAGE 1 FOR PLAN AND SECTION

1. 6" CLA-VAL 92G-01BCSY PRESSURE REDUCING VALVE WITH X101 POSITION INDICATOR DI BODY, S.S. TRIM, #150 FL.
2. 2" CLA-VAL 90G-01BC PRESSURE REDUCING VALVE WITH X101 POSITION INDICATOR DI BODY, BRONZE TRIM - THREADED.
3. 6" D.I. RW NRS GATE VALVE WITH HANDWHEEL, #150 FL.
4. 2" MUELLER A2360-6W41 W55 RW NRS GATE VALVE WITH HANDWHEEL, THD.
5. UNIFLANGE
6. 4" 0-300 PSI PRESSURE GAUGE WITH SNUBBER AND GAUGE COCK; TOP OF PIPE.
7. PRECAST CONCRETE VAULT 10'L x 5'W x 3'-7"H INSIDE, SOLID WALL WITH WHITE INTERIOR & BLACK EXTERIOR SEALANT
8. 48" X 96" DOUBLE DOOR ALUMINUM HATCH, LW PRODUCTS OR EQUAL. H-20 RATED. DRAIN HATCH TO VAULT FLOOR.
9. ADJUSTABLE PIPE SUPPORTS
10. 3/4" HOSE BIB ASSEMBLY
11. PIPE SPOOL (FLxPE) LENGTH AS REQUIRED.
12. REDUCER (AS REQUIRED), MJ WITH MEGA-LUGS
13. WATER METER STRAINER, INVENSYS OR EQUAL, FL
14. UNIONS

NOTES:

1. 6" x 2" PRV ASSEMBLY SHOWN. SIZES TO BE DETERMINED BY THE CITY BASED ON DOWNSTREAM DEMANDS.
2. ALL 3" AND LARGER PIPE INSIDE WETTED SURFACES TO BE SANDBLASTED, EPOXY LINED AND COATED TO AWWA C210 AND NSF-61 SPECIFICATION. EXTERIOR COATING SHALL BE BLUE ENAMEL.
3. ALL PIPE 2" AND SMALLER TO BE BRASS.

CITY OF GRANITE FALLS			
PRESSURE REDUCING STATION (2 of 2)			
APPROVED: Warren R. Perkins 4/10/08 BY CITY DATE			DWG. NO. PRSD
DATE: 3/2008	DRWN: M.S.	CHKD: W.P.	SCALE: NONE

L:\GRFALLS\0031I STD DETAILS\STANDARDS\PRSD.DWG, LAYOUT1, 4/8/2008 4:42:07 PM, 1:1, BY: W PERKINS

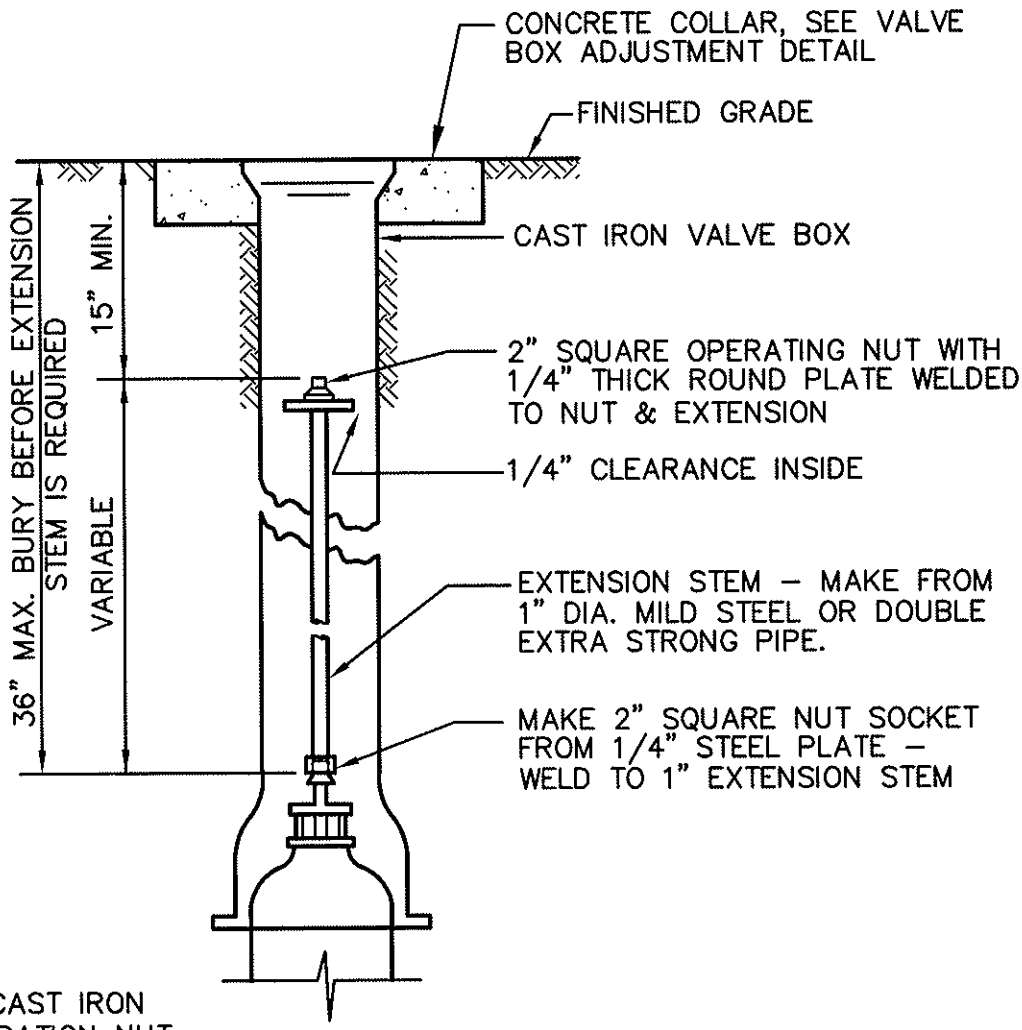

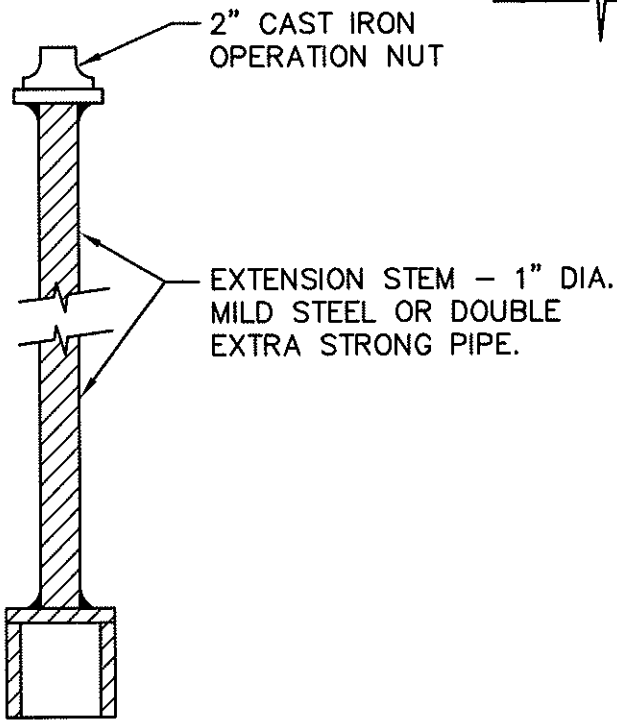

CITY OF GRANITE FALLS			
WATER VALVE STEM EXTENSION			
APPROVED: Warren W. Perkins 4/10/08 BY CITY DATE			DWG. NO. WAT-VALV
DATE: 3/2008	DRWN: M.S.	CHKD: W.P.	SCALE: NONE

L:\GRFALLS\00311 STD DETAILS\STANDARDS\WAT-VALV.DWG, LAYOUT1, 4/8/2008 3:52:26 PM, 1:1, BY: W PERKINS

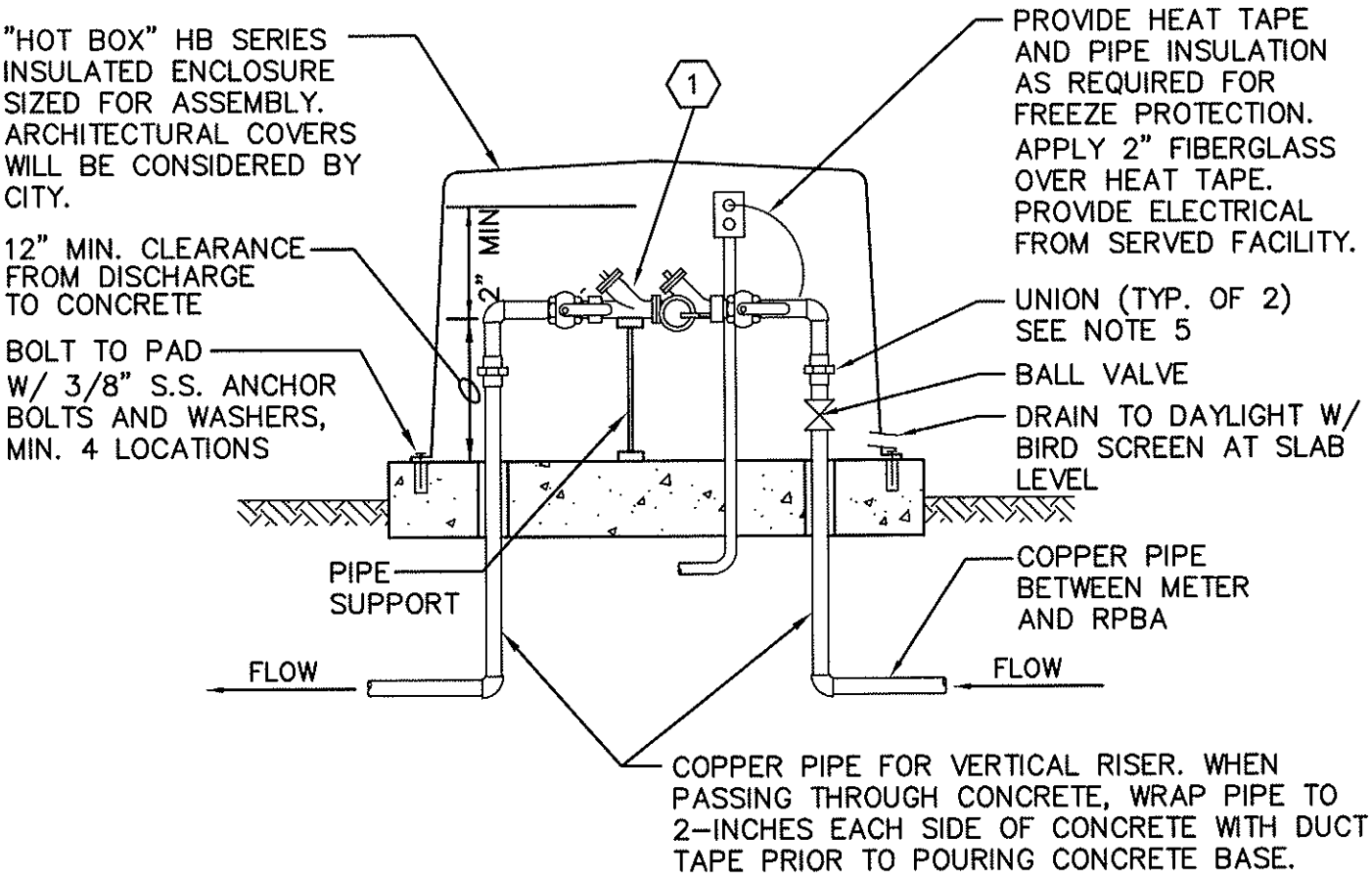

REDUCED PRESSURE BACKFLOW DEVICE

NOT TO SCALE

(1) WASHINGTON STATE APPROVED REDUCED PRESSURE BACKFLOW ASSEMBLY (RPBA) WITH TEST COCK PROTECTION AND BRONZE BODY BALL VALVE AT EACH END.

NOTES:

1. CONCRETE TO BE 2500 PSI (MINIMUM) MIX WITH AIR ENTRAINMENT.
2. COMPLETE ALL WORK IN ACCORDANCE WITH STATE, DISTRICT AND MANUFACTURER STANDARDS.
3. SYSTEM SHALL NOT BE PUT INTO SERVICE UNTIL RPBA IS APPROVED BY THE CITY AND TESTED/CERTIFIED BY A WASHINGTON STATE LICENSED TESTER.
4. RPBA IS CONSIDERED PART OF THE PRIVATE SYSTEM AND SHALL BE MAINTAINED BY THE PROPERTY OWNER WITH ANNUAL CERTIFICATION REQUIRED.
5. DIELECTRIC UNIONS SHALL BE USED TO SEPARATE DISSIMILAR MATERIALS.
6. NO BRANCH CONNECTIONS ALLOWED BETWEEN METER AND RPBA.

CITY OF GRANITE FALLS			
REDUCED PRESSURE BACKFLOW ASSEMBLY 3/4" TO 2"			
APPROVED: Warren N. Perkins 4/10/08 BY CITY DATE			DWG. NO. RPBA
DATE: 3/2008	DRWN: M.S.	CHKD: W.P.	SCALE: NONE

L:\GRFALLS\00311 STD DETAILS\STANDARDS\RPBA.DWG, LAYOUT1, 4/8/2008 3:55:43 PM, 1:1, BY: W PERKINS

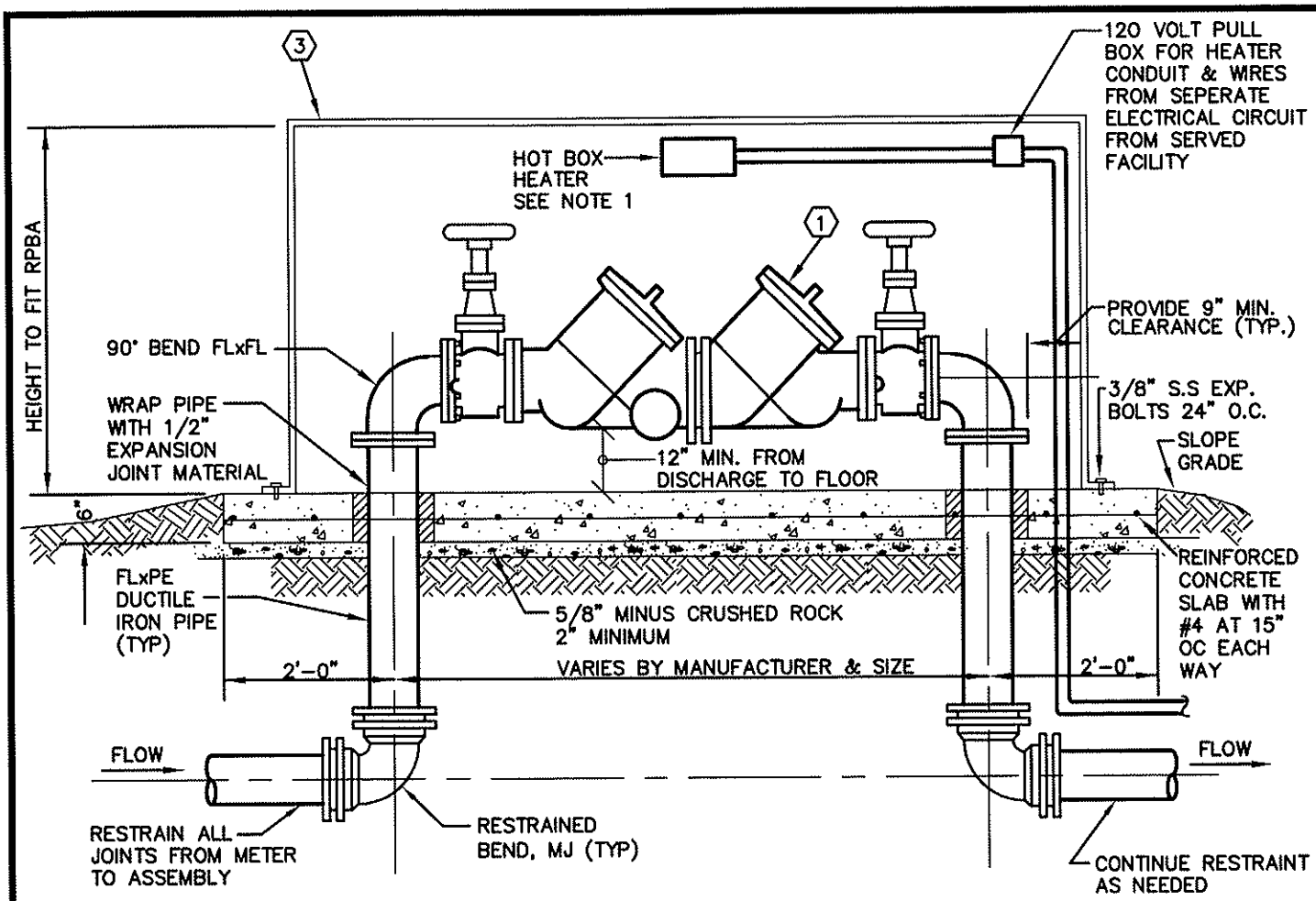

(1) WASHINGTON STATE APPROVED REDUCED PRESSURE BACKFLOW ASSEMBLY (RPBA) WITH RESILIENT SEAT GATE VALVE EACH END

(2) NOT USED

(3) ALUMINUM "HOT BOX" MODELS 4 THROUGH 10 FOR RESPECTIVE SIZE RPBA SHALL BE MODIFIED TO FIT ABOVE HEIGHT REQUIREMENTS. VALVE STEM SHALL NOT EXTEND OUTSIDE OF BOX.

NOTES:

1. "HOT BOX" TO BE LOCATED OUTDOORS AND ACCESSIBLE TO CITY. ALTERNATE LOCATION REQUIRES CITY APPROVAL.
2. HEATERS AND WIRING SHALL BE RATED AT 2,000 WATT FOR 8" AND UNDER: 3,000 WATT FOR 10".
3. CONCRETE TO BE 2500 PSI (MINIMUM) MIX WITH AIR ENTRAINMENT.
4. COMPLETE ALL WORK IN ACCORDANCE WITH STATE, DISTRICT AND MANUFACTURER STANDARDS.
5. SYSTEM SHALL NOT BE PUT INTO SERVICE UNTIL RPBA IS APPROVED BY THE CITY AND TESTED/CERTIFIED BY A WASHINGTON STATE LICENSED TESTER.
6. RPBA IS CONSIDERED PART OF THE PRIVATE SYSTEM AND SHALL BE MAINTAINED BY THE PROPERTY OWNER WITH ANNUAL CERTIFICATION REQUIRED.
7. DRAIN TO DAYLIGHT WITH BIRD SCREEN LOCATED AT SLAB LEVEL (SIZED PER MANUFACTUERS RECOMMENDATION).
8. NO BRANCH CONNECTIONS ALLOWED BETWEEN METER AND RPBA.

CITY OF GRANITE FALLS			
REDUCED PRESSURE BACKFLOW ASSEMBLY 3" AND LARGER			
APPROVED: Warren W. Perkins 4/10/08 BY CITY DATE			DWG. NO. RPBA-2
DATE: 3/2008	DRWN: M.S.	CHKD: W.P.	SCALE: NONE

L:\GRFALLS\0031I STD DETAILS\STANDARDS\RPBA-2.DWG, LAYOUT1, 4/8/2008 4:50:29 PM, 1:1, BY: W PERKINS

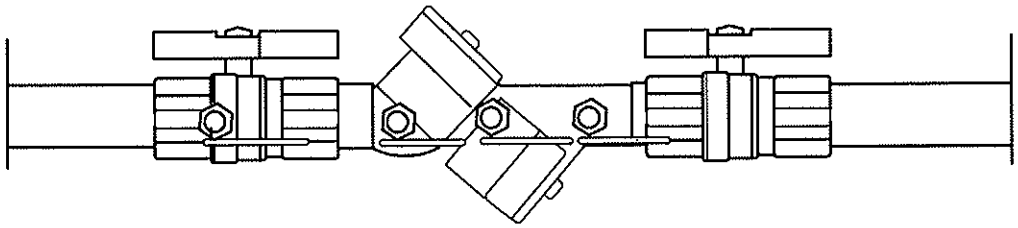

PLAN VIEW

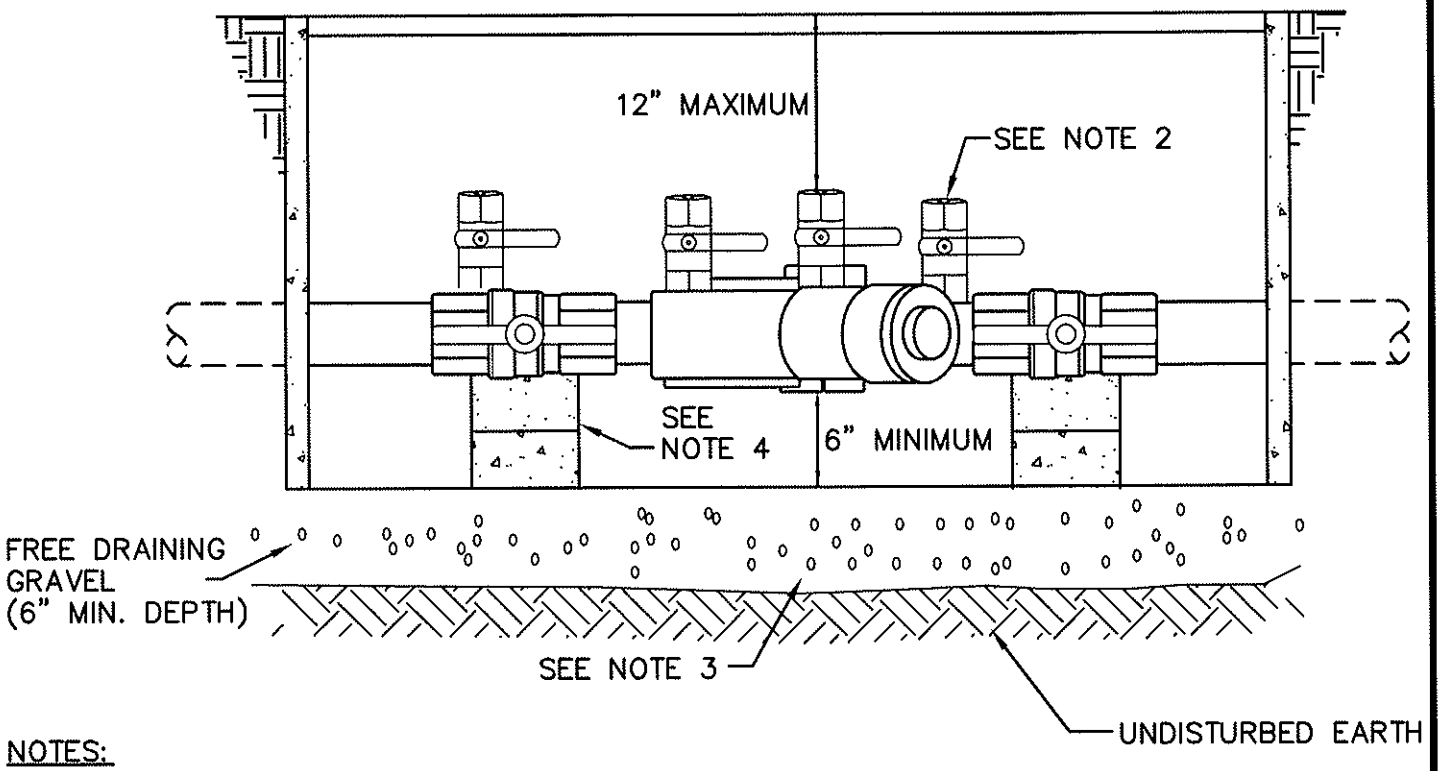

NOTES:

1. MINIMUM BOX SIZE 3/4"– 1" ASSEMBLIES, 10"x13"
   1 1/4"– 2" ASSEMBLIES, 14"x20"
2. ASSEMBLY MUST BE INSTALLED WITH TEST COCKS FACING UP OR TO ONE SIDE. INSTALL WATERTIGHT PLUGS IN ALL TEST COCKS.
3. SUFFICIENT DRAINAGE MUST BE PROVIDED TO PREVENT ASSEMBLY FROM BEING SUBMERGED.
4. PROVIDE SUPPPORT BLOCKS AS MAY BE REQUIRED.
5. PROVIDE A STRAINER WITH BLOW OUT TAPPING AHEAD OF DEVICE IF REQUIRED BY CITY.
6. THOROUGHLY FLUSH THE LINE, PRIOR TO THE INSTALLATION OF THE DCVA.
7. PROTECT DEVICE FROM FREEZING BY INSTALLING IN STRUCTURE OR PER "HOT BOX" SHOWN IN REDUCED PRESSUREBACKFLOW DEVICE DETAIL.

CITY OF GRANITE FALLS			
"INDIVIDUAL" DOUBLE CHECK DETECTOR ASSEMBLY			
APPROVED: Warren W. Perkins 4/10/08 BY CITY DATE			DWG. NO. DBL–CHCK
DATE: 3/2008	DRWN: M.S.	CHKD: W.P.	SCALE: NONE

L:\GRFALLS\00311 STD DETAILS\STANDARDS\DBL-CHCK.DWG, LAYOUT1, 4/8/2008 4:04:02 PM, 1:1, BY: W PERKINS

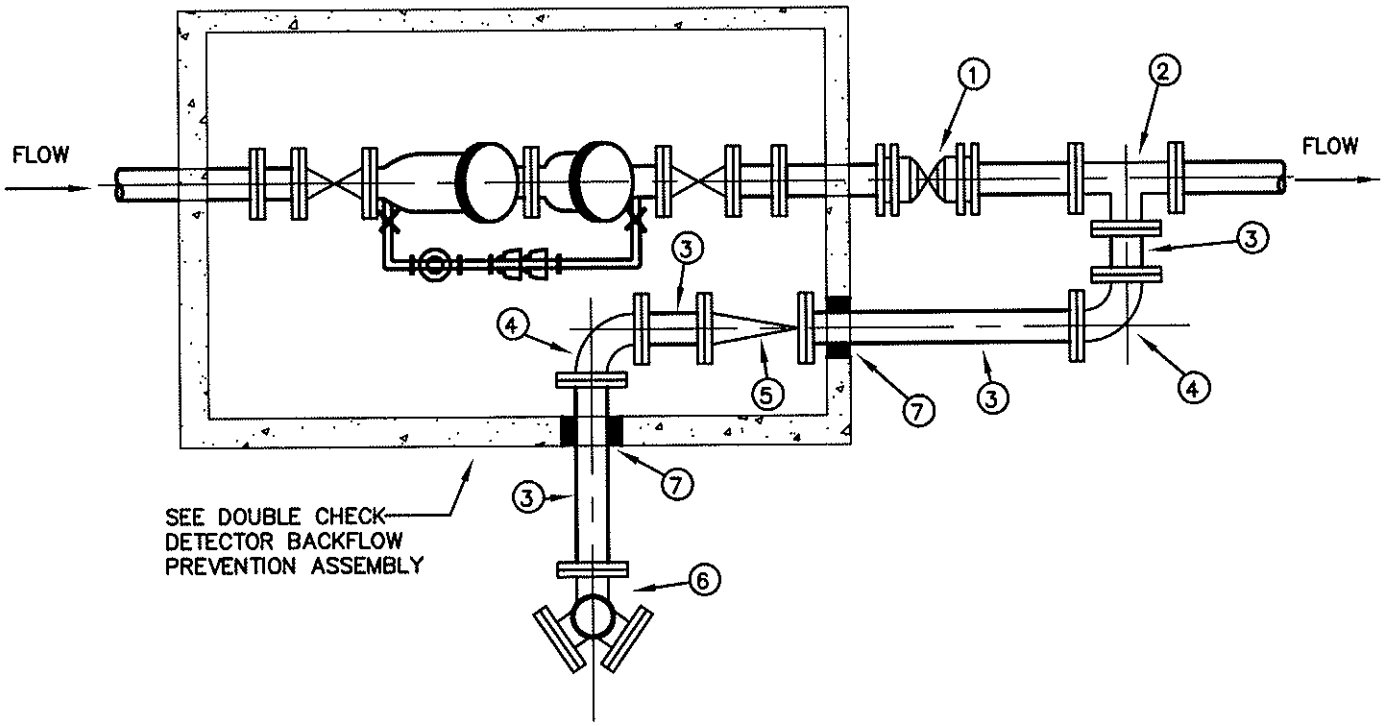

NO.	DESCRIPTION
1	POST INDICATOR VALVE, MJ WITH MEGALUGS
2	4" TEE, MJ WITH MEGALUGS
3	4" DUCTILE IRON PIPE, CLASS 52
4	4" x 90° BENDS, MJ WITH MEGALUGS
5	4" FLAPPER CHECK VALVE, MJ WITH MEGALUGS
6	FIRE DEPARTMENT CONNECTION, MJ WITH MEGALUGS. CONNECTION TO COMPLY WITH FIRE DEPARTMENT REQUIREMNETS.
7	WATERTIGHT GROUT

CITY OF GRANITE FALLS			
FIRE LINE CONNECTION			
APPROVED: Warren N. Perkins 4/10/08 BY CITY DATE			DWG. NO. FIRELINE
DATE: 3/2008	DRWN: M.S.	CHKD: W.P.	SCALE: NONE

L:\GRFALLS\00311 STD DETAILS\STANDARDS\FIRELINE.DWG, LAYOUT1, 4/8/2008 4:05:01 PM, 1:1, BY: W PERKINS

Miscellaneous Details

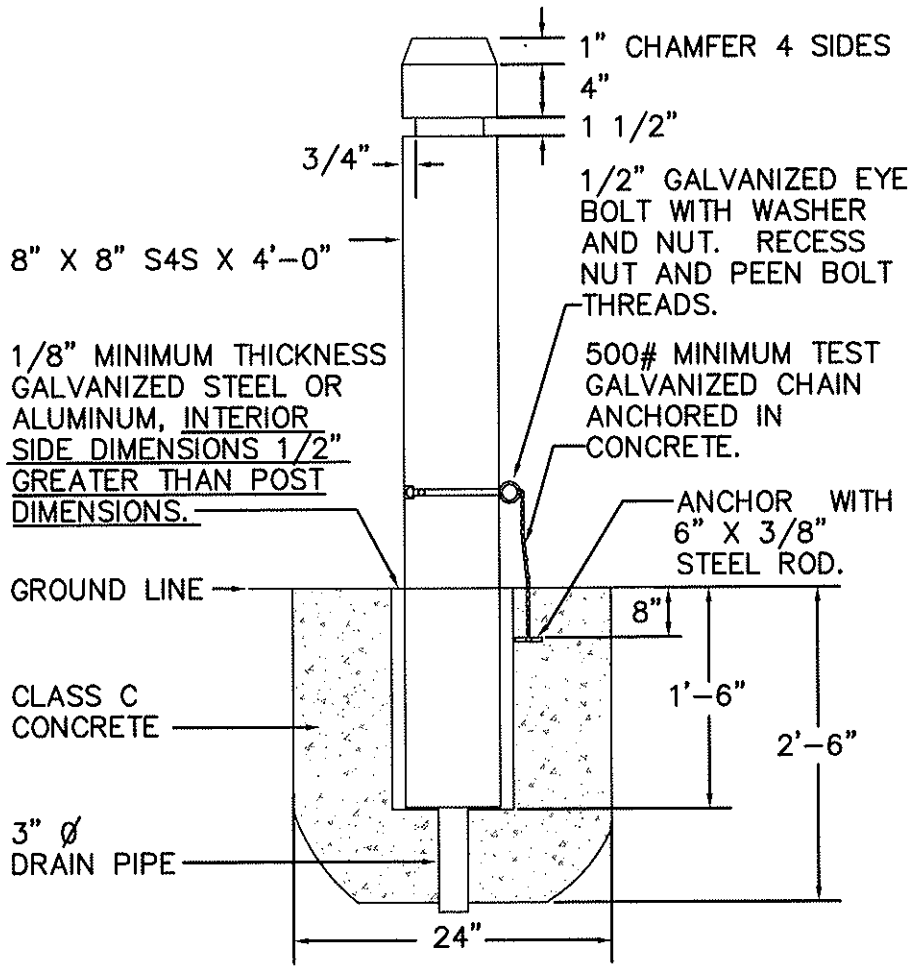

1. TIMBER SHALL BE DOUGLAS FIR, DENSE CONSTRUCTION GRADE, AND SHALL BE PENTACHLOROPHENOL PRESSURE TREATED BY EMPTY CELL PROCESS WITH MINIMUM NET RETENTION OF 0.05 LBS./CU. FOOT OF THE DRY SALT. (USE LIGHT PETROLEUM SOLVENT.)
2. STEEL TUBE SHALL CONFORM T ASTM A53 OR ASTM A53 GRADE A.
3. NUTS, BOLTS, AND WASHERS SHALL CONFORM TO W.S.D.O.T. STANDARD.
4. ALL STEEL PARTS SHALL BE GALVANIZED.
5. CONCRETE SHALL BE CLASS C.

CITY OF GRANITE FALLS			
REMOVABLE BOLLARD			
APPROVED: Warren W. Perkins 4/10/08 BY CITY DATE			DWG. NO. REM-BOL
DATE: 3/2008	DRWN: M.S.	CHKD: W.P.	SCALE: NONE

L:\GRFALLS\003II STD DETAILS\STANDARDS\REM-BOL.DWG, LAYOUT1, 4/9/2008 10:04:49 AM, 1:1, BY: W PERKINS

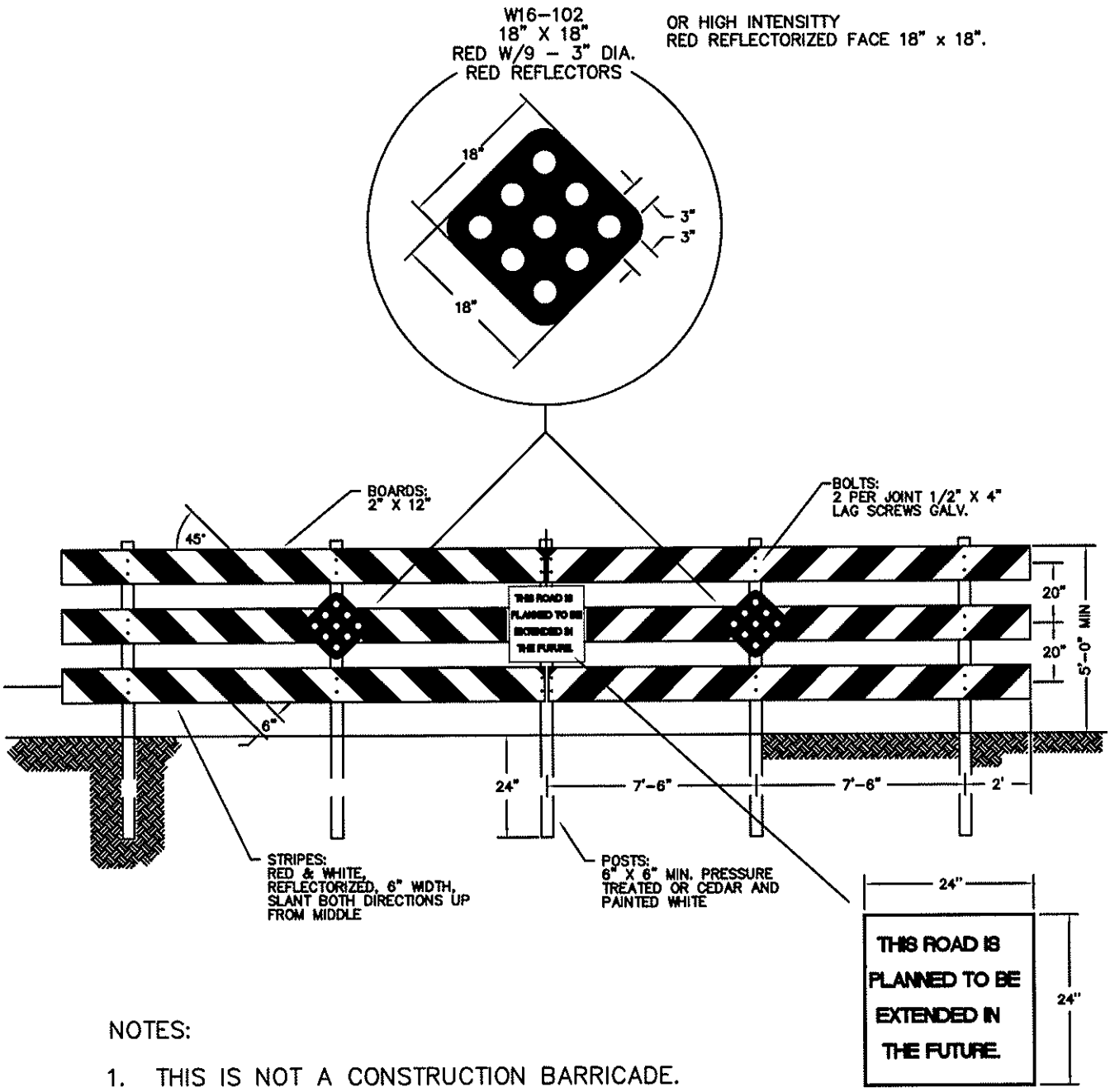

NOTES:

1. THIS IS NOT A CONSTRUCTION BARRICADE.
2. THE WORDS "THIS ROAD IS PLANNED TO BE EXTENDED IN THE FUTURE" SHALL BE STENCILED IN 6 INCH WHITE LETTERS ON PAVEMENT APPROXIMATELY 10 FEET FROM BARRICADE.

CITY OF GRANITE FALLS			
TYPE III BARRICADE FOR FUTURE EXTENDED ROADWAYS			
APPROVED: Warren W. Perkins 4/10/08 BY CITY DATE			DWG. NO. BARICADE
DATE: 3/2008	DRWN: M.S.	CHKD: W.P.	SCALE: NONE

L:\GRFALLS\00311 STD DETAILS\STANDARDS\BARICADE.DWG, LAYOUT1, 4/9/2008 10:05:42 AM, 1:1, BY: W PERKINS

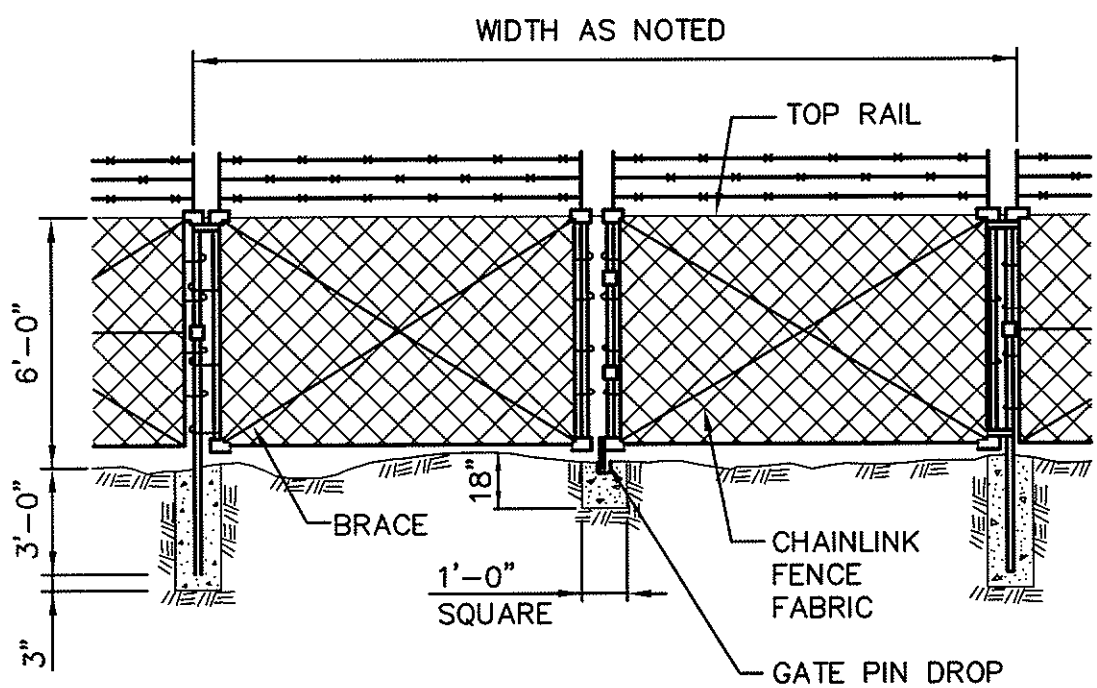

GATE ELEVATION

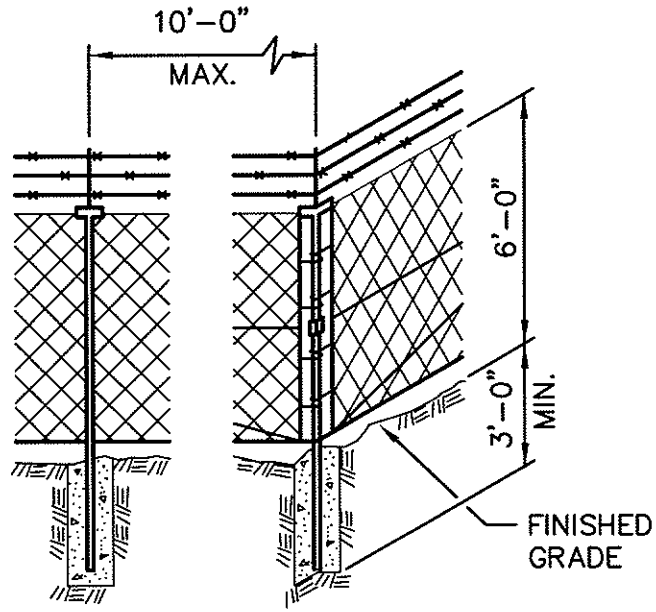

CORNER POST

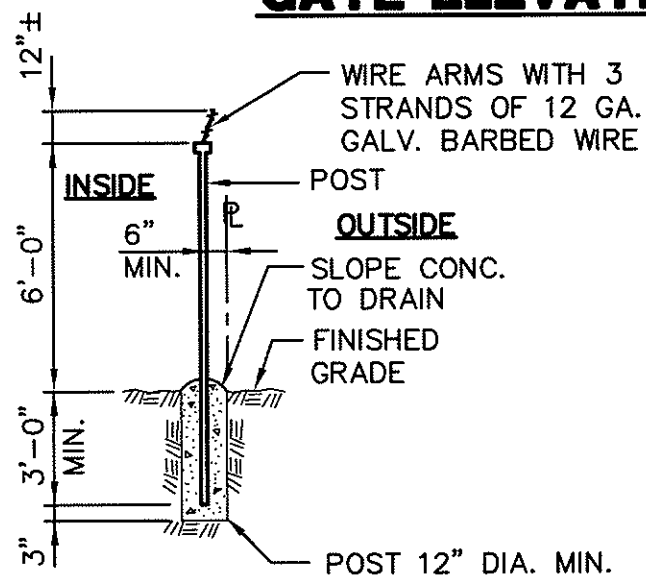

SECTION

NOTES:

1. CHAINLINK FENCE AND GATE SHALL BE FURNISHED AND INSTALLED ACCORDING TO THE WASHINGTON STATE DEPARTMENT OF TRANS-PORTATION STANDARD SPECIFICATIONS FOR CHAINLINK FENCE TYPE 3 AS DETAILED ON STANDARD PLANS L-20.10-00.
2. CORNER POSTS SHALL BE INSTALLED AT ALL POINTS WHERE THE ALIGNMENT CHANGES 30° OR MORE.

CITY OF GRANITE FALLS			
SWING GATE AND FENCE DETAILS			
APPROVED: Warren N. Nelson 4/10/08 BY CITY DATE			DWG. NO. SGF-1
DATE: 3/2008	DRWN: M.S.	CHKD: W.P.	SCALE: NONE

L:\GRFALLS\003H STD DETAILS\STANDARDS\SGF-1.DWG, LAYOUT1, 4/9/2008 10:08:40 AM, 1:1, BY: W PERKINS

NOTES:

1. WHERE POSSIBLE, MAINTAIN NATURAL VEGETATION FOR SILT CONTROL.
2. FILTER FABRIC FENCES OR STRAW BALES TO BE LOCATED AT THE BOTTOM OR TOE OF NEWLY EXCAVATED SLOPES AS INDICATED ON THE PLANS.
3. CONSTRUCT GRAVEL SACK CHECK DAMS IN OPEN DITCHES OR SWALES AS REQUIRED.
4. TO PROVIDE EROSION CONTROL ON STEEP AND NEWLY GRADED SLOPES, CONTRACTOR SHALL EMPLOY EROSION CONTROL BLANKET OR CLEAR PLASTIC IMEDIATELY AFTER GRADING SLOPES AND THE APPLICATION OF SEEDING. THIS SHALL BE DONE AND IN PLACE BEFORE THE FALL RAINFALL BEGINS.
5. ALL TEMPORARY EROSION CONTROL STRUCTURES SHALL BE MAINTAINED IN SATISFACTORY CONDITION UNTIL CLEARING AND/OR CONSTRUCTION IS COMPLETED AND SURFACE RESTORATION HAS BEEN COMPLETED.
6. SEDIMENT SHALL BE REMOVED WHEN LEVEL OF DEPOSITS REACHES ONE-HALF THE HEIGHT OF THE BARRIER.
7. RETURN SILTATION CONTROL AREAS TO ORIGINAL GROUND CONDITIONS.

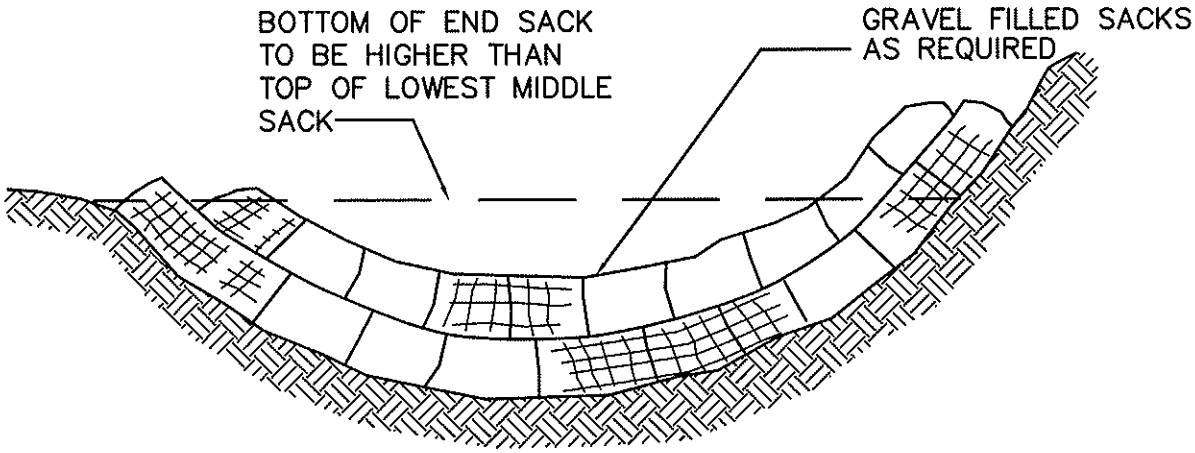

ELEVATION

GRAVEL SACK CHECK DAM

CITY OF GRANITE FALLS			
GRAVEL SACK CHECK DAM			
APPROVED: Warren W. Perkins 4/10/08 BY CITY DATE			DWG. NO. GRVCK-DAM
DATE: 3/2008	DRWN: M.S.	CHKD: W.P.	SCALE: NONE

L:\GRFALLS\00311 STD DETAILS\STANDARDS\GRVLCK-DAM.DWG, LAYOUT1, 4/9/2008 10:11:59 AM, 1:1, BY: W PERKINS

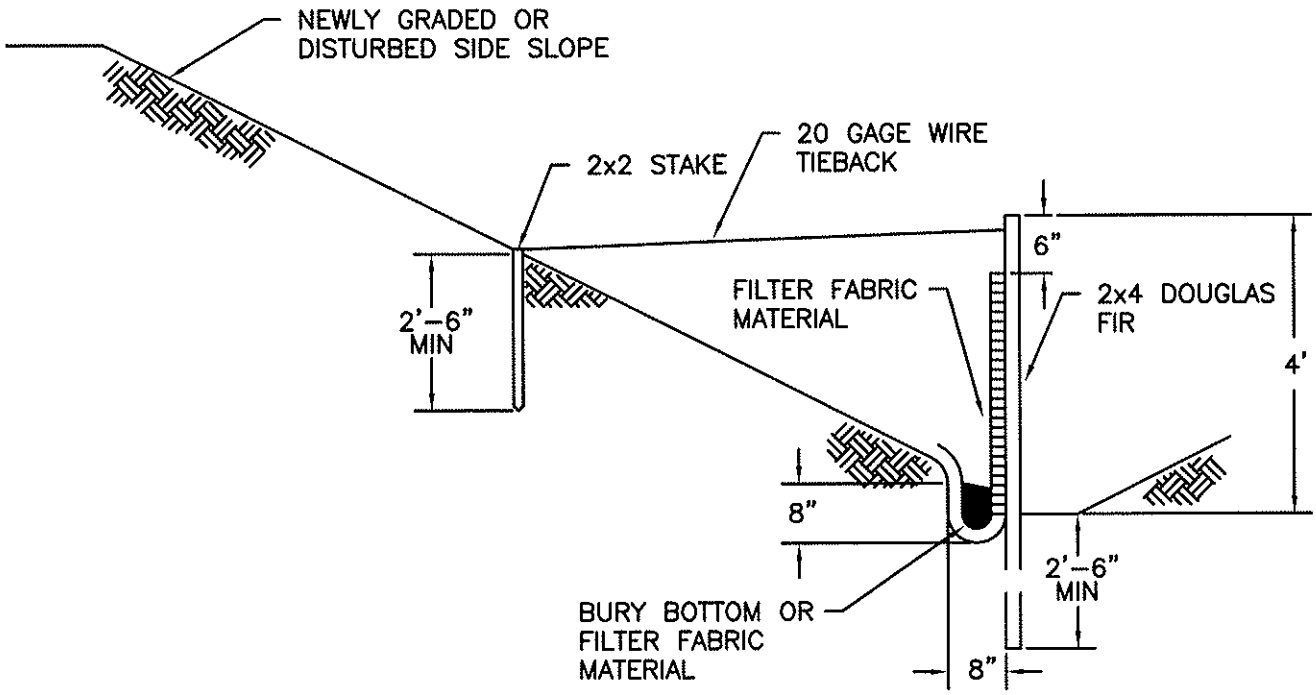

TYPICAL CROSS SECTION

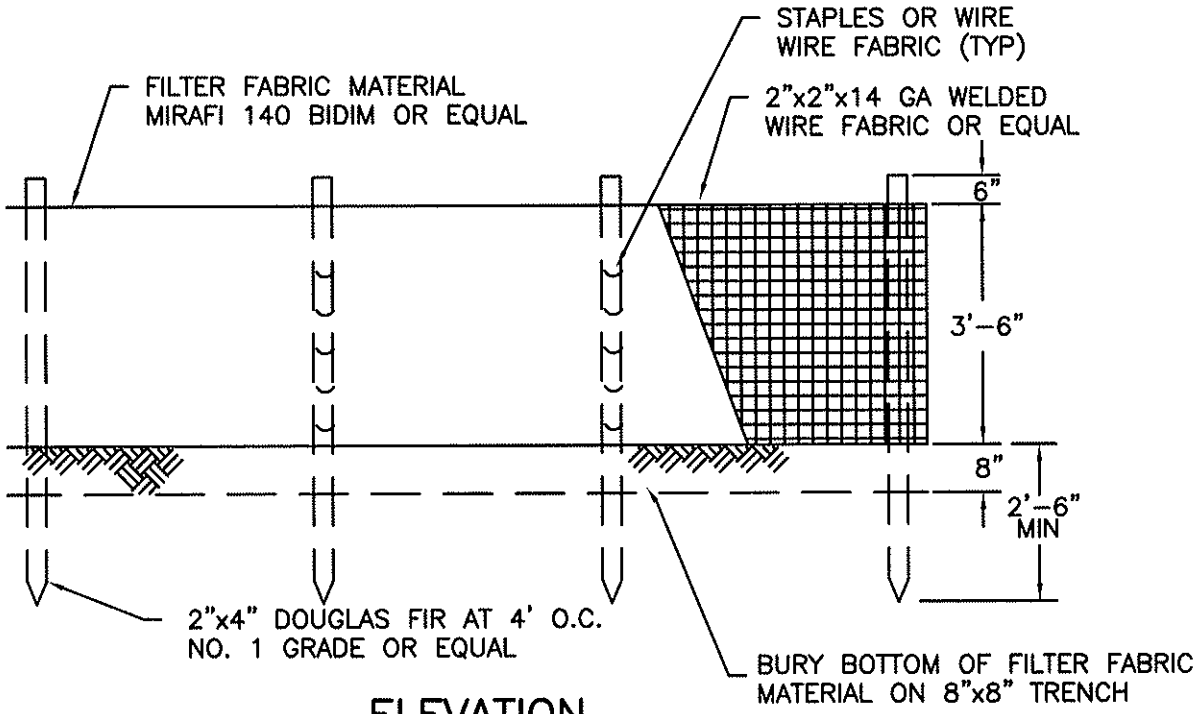

ELEVATION

CITY OF GRANITE FALLS			
SILTATION FENCE DETAIL			
APPROVED: Warren W. Perkins 4/10/08 BY CITY DATE			DWG. NO. SILT-FENC
DATE: 3/2008	DRWN: M.S.	CHKD: W.P.	SCALE: NONE

L:\GRFALLS\0031 STD DETAILS\STANDARDS\SILT-FENC.DWG, LAYOUT1, 4/9/2008 10:14:07 AM, 1:1, BY: W PERKINS

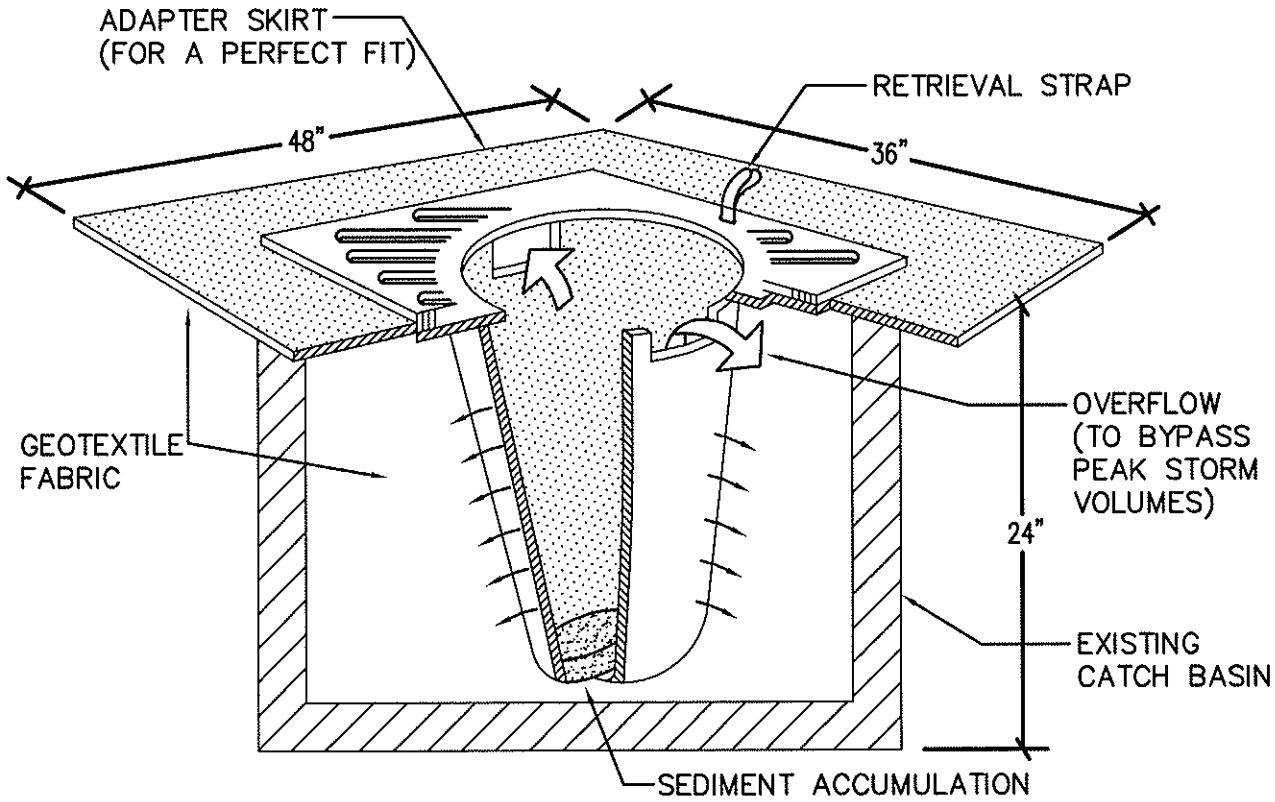

PROVIDE CATCH BASIN SEDIMENT PROTECTION WITH
STREAMGUARD BASIN INSERT #3003, FROM FOSS
ENVIRONMENTAL OR APPROVED EQUAL
7440 W. MARGINAL WAY S.
SEATTLE, WA 98108-4141
PHONE: 1-800-909-3677

CITY OF GRANITE FALLS			
STORM DRAIN INLET PROTECTION DETAIL			
APPROVED: Warren W. Perkins 4/10/08 BY CITY DATE			DWG. NO. SD-IPD
DATE: 3/2008	DRWN: M.S.	CHKD: W.P.	SCALE: NONE

L:\GRFALLS\003II STD DETAILS\STANDARDS\SD-IPD.DWG, LAYOUT1, 4/9/2008 10:15:07 AM, 1:1, BY: W PERKINS

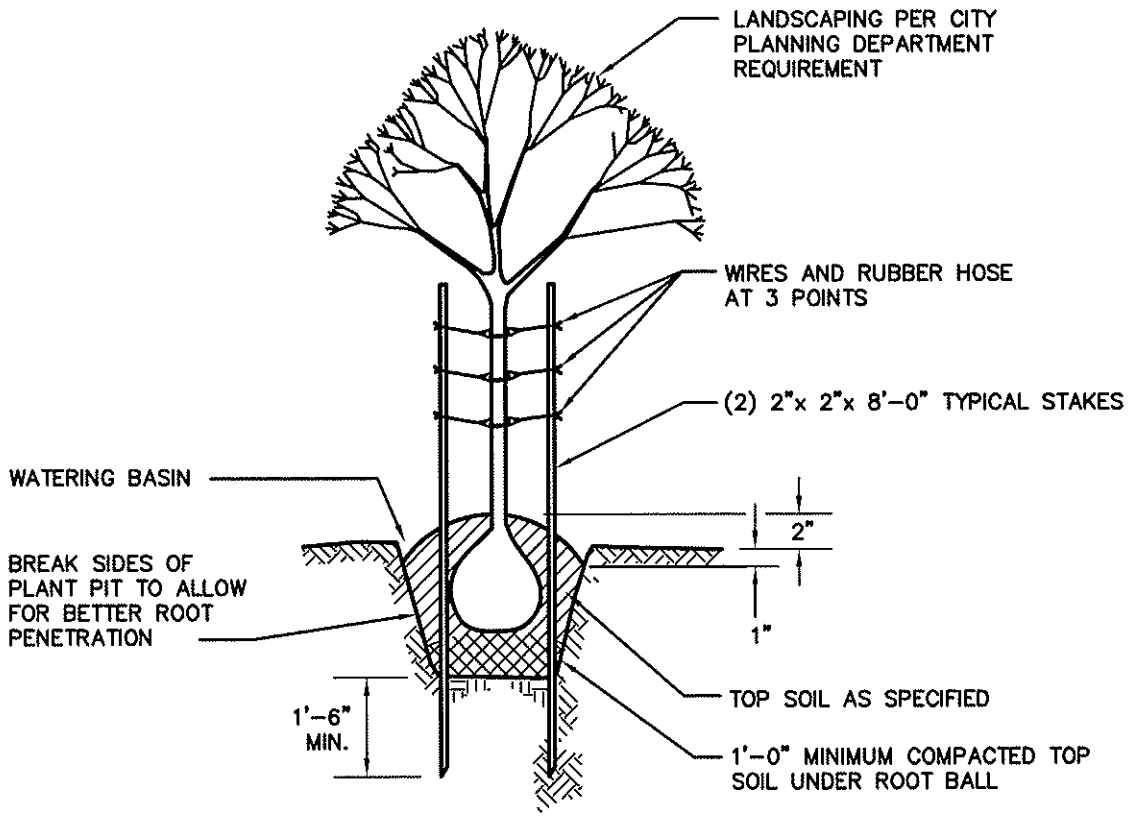

NOTES:

1. PLANT ALL TREES ONE INCH HIGHER THAN LEVEL AT WHICH GROWN IN NURSERY
2. TAKE CARE TO AVOID ROOTS WITH STAKES
3. PLANT PIT 3'-0" ø OR 1'-0" LARGER THAN ROOT SPREAD, WHICHEVER IS GREATER.

CITY OF GRANITE FALLS			
STREET TREE PLANTING AND STAKING DETAIL			
APPROVED: Warren W. Parkins 4/10/08 BY CITY DATE			DWG. NO. LSCP-1
DATE: 3/2008	DRWN: M.S.	CHKD: W.P.	SCALE: NONE

L:\GRFALLS\00311 STD DETAILS\STANDARDS\LSCP-1.DWG, LAYOUT1, 4/9/2008 10:16:03 AM, 1:1, BY: W PERKINS

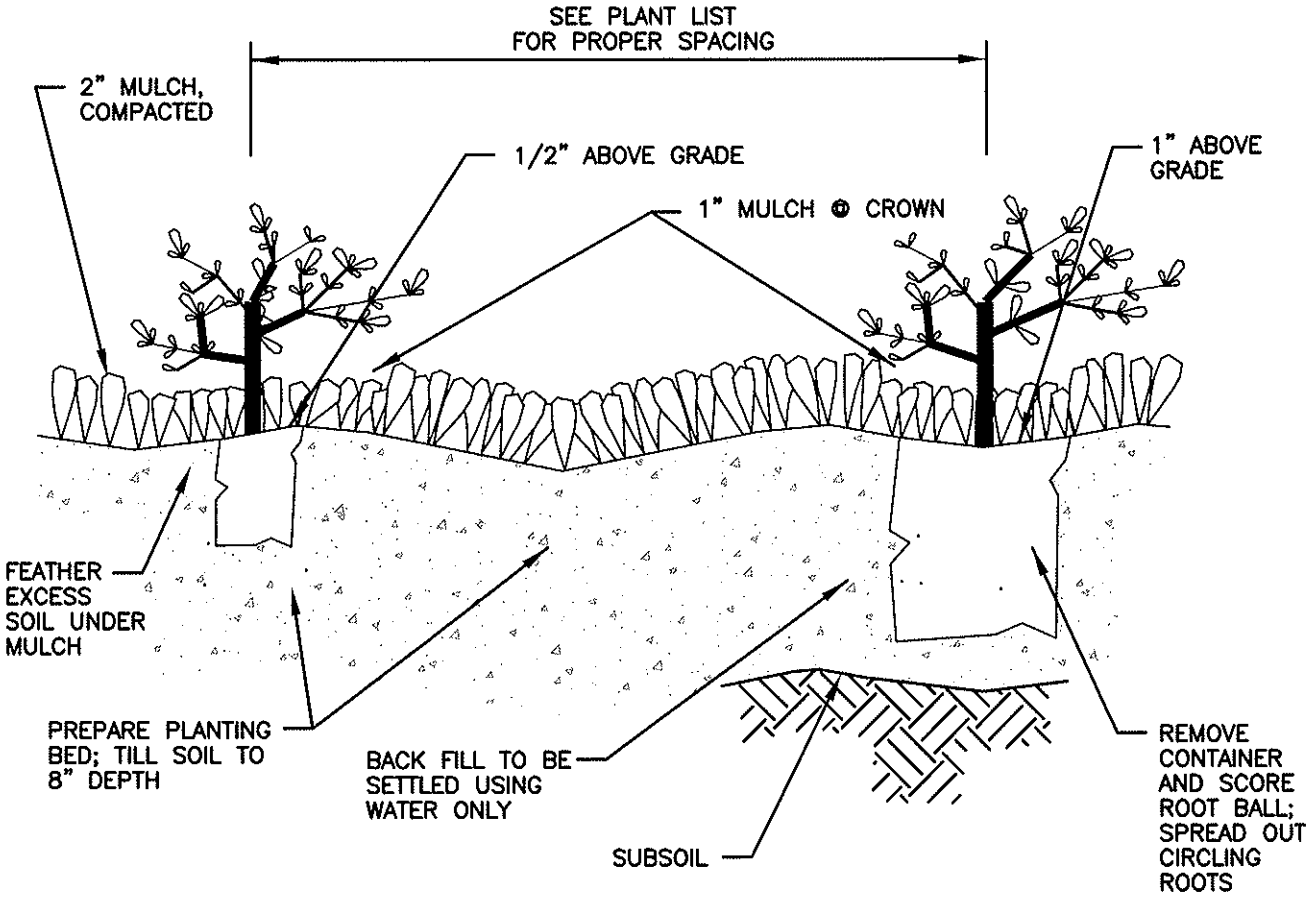

LESS THAN 1 GALLON CONTAINER
(PLANTED AFTER MULCH)

1 GALLON CONTAINER AND LARGER
(PLANTED BEFORE MULCH)

CITY OF GRANITE FALLS			
GROUND COVER PLANTING DETAIL			
APPROVED: Warren W. Perkins 4/10/08 BY CITY DATE			DWG. NO. PLNT-DET
DATE: 3/2008	DRWN: M.S.	CHKD: W.P.	SCALE: NONE

L:\GRFALLS\00311 STD DETAILS\STANDARDS\PLNT-DET.DWG, LAYOUT1, 4/9/2008 10:16:54 AM, 1:1, BY: W PERKINS

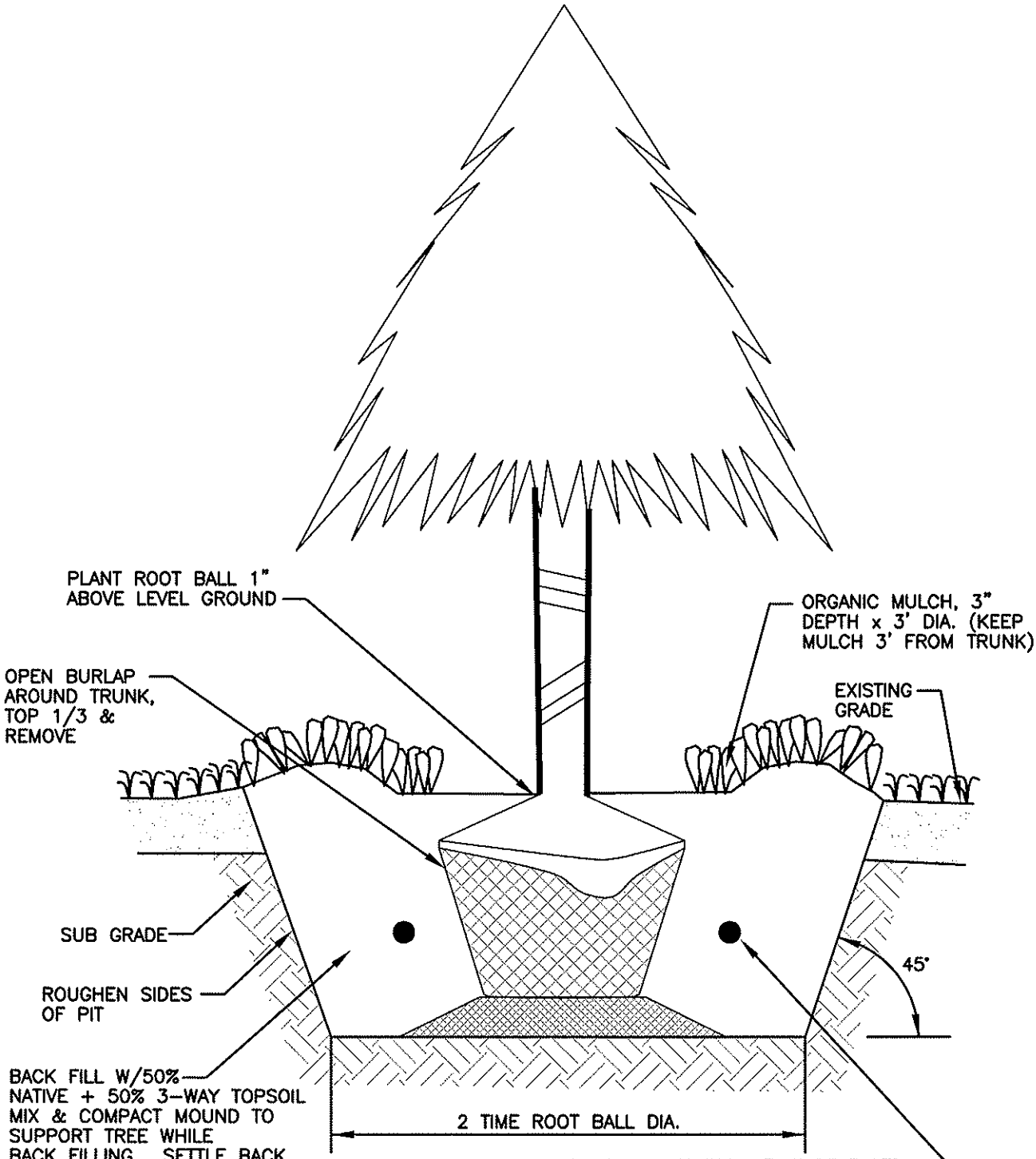

CITY OF GRANITE FALLS			
BALL & BURLAP PLANTING DETAIL			
APPROVED: Warren W. Perkins 4/10/08 BY CITY DATE			DWG. NO. PLNT-DET
DATE: 3/2008	DRWN: M.S.	CHKD: W.P.	SCALE: NONE

L:\GRFALLS\00311 STD DETAILS\STANDARDS\PLNT-DET.DWG, LAYOUT1, 4/9/2008 10:17:47 AM, 1:1, BY: W PERKINS

NOTE:
FOR CONTAINER STOCK, REMOVE ROOT BALL FROM CONTAINER & SCORE ON 4 SIDES PRIOR TO SETTING IN PLANTING PIT.

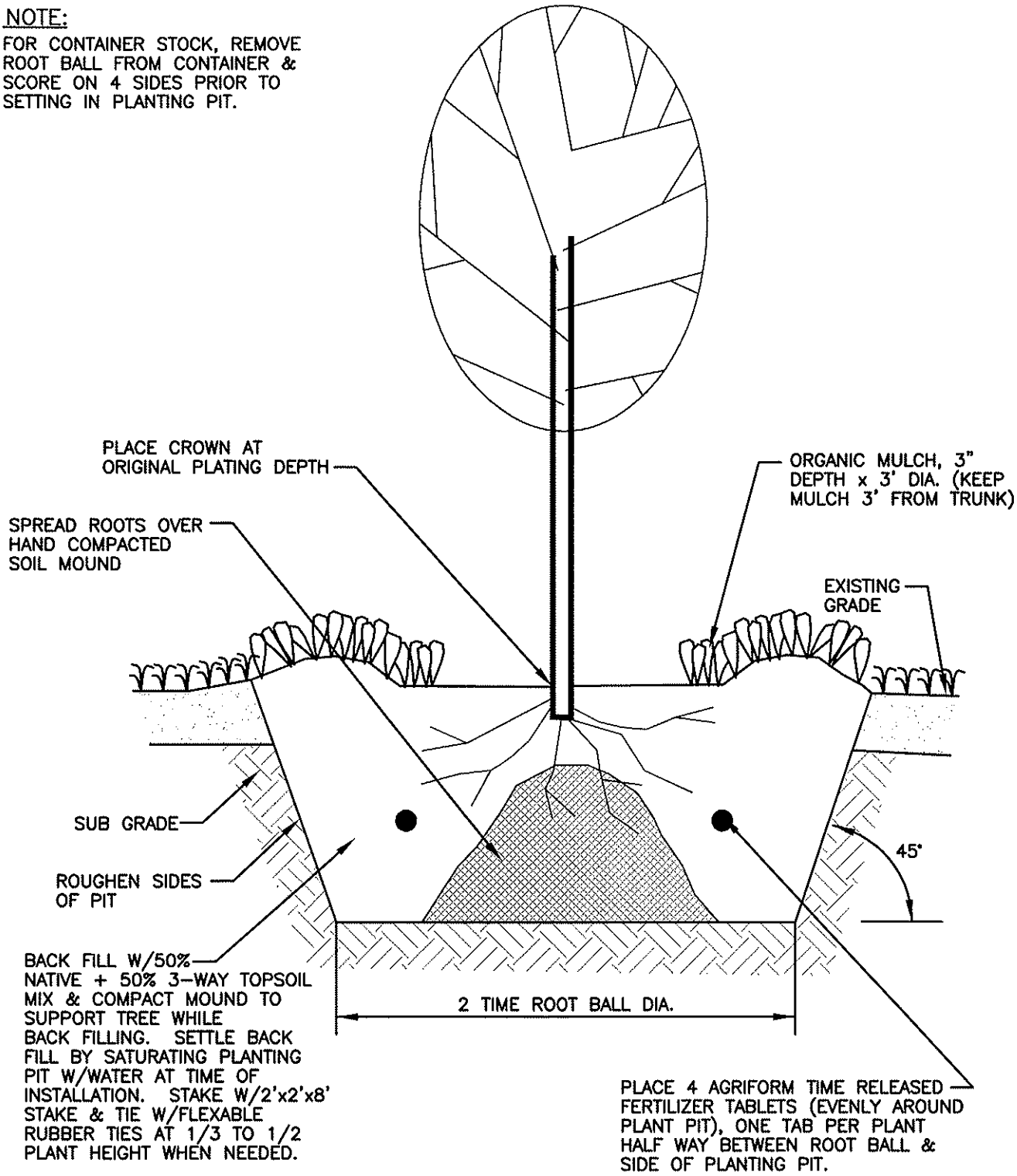

CITY OF GRANITE FALLS			
BARE ROOT/CAN STOCK PLANTING DETAIL			
APPROVED: Warren W. Perkins 4/10/08 BY CITY DATE			DWG. NO. PLNT-DET
DATE: 3/2008	DRWN: M.S.	CHKD: W.P.	SCALE: NONE

L:\GRFALLS\00311 STD DETAILS\STANDARDS\PLNT-DET.DWG, LAYOUT1, 4/9/2008 10:18:12 AM, 1:1, BY: W PERKINS

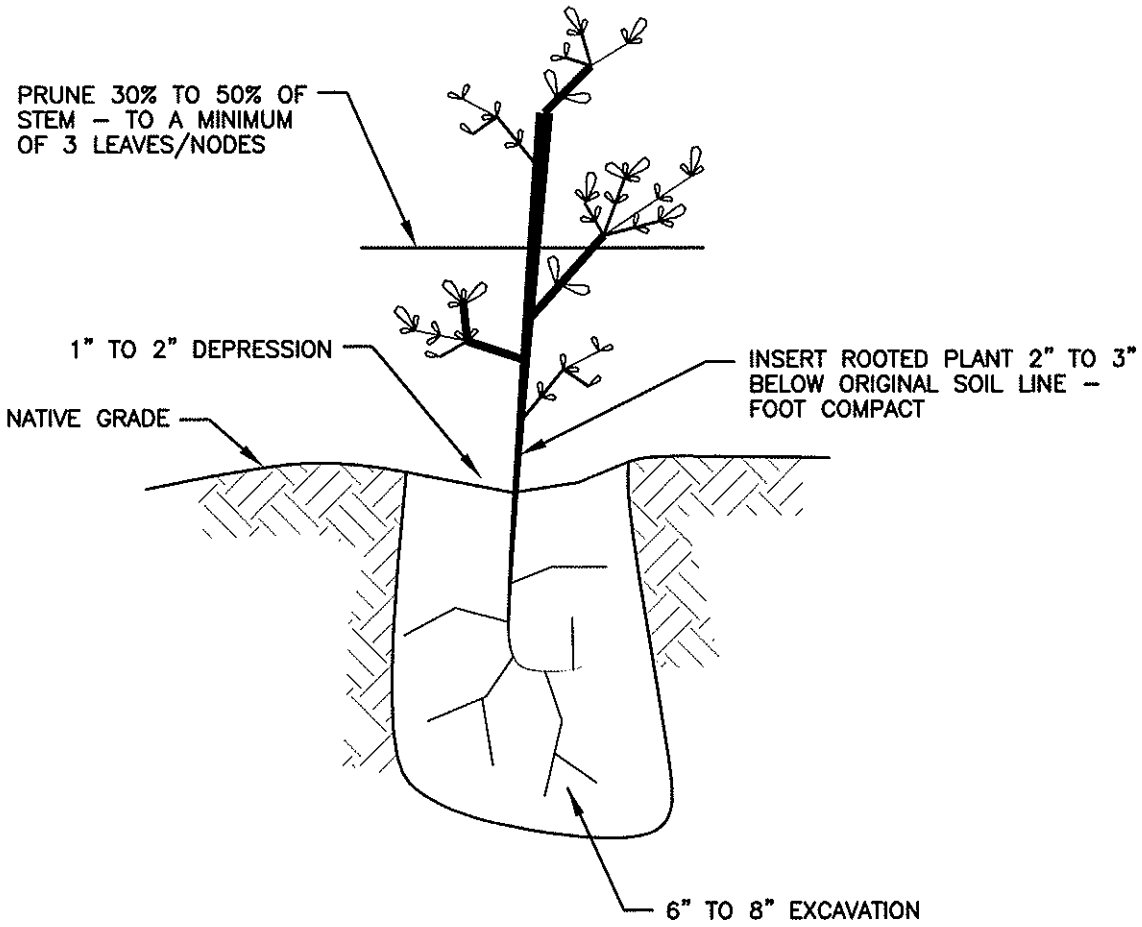

NOTES:

1. NO TOPSOIL
2. NO FERTILIZER

CITY OF GRANITE FALLS			
ROOTED CUTTING/OFFSET SEEDLING DETAIL			
APPROVED: Warren M. Perkins 4/10/08 BY CITY DATE			DWG. NO. PLNT-DET
DATE: 3/2008	DRWN: M.S.	CHKD: W.P.	SCALE: NONE

L:\GRFALLS\0031I STD DETAILS\STANDARDS\PLNT-DET.DWG, LAYOUT1, 4/9/2008 10:19:20 AM, 1:1, BY: W PERKINS

The Ford 70 Series Coppersetter

For 5/8", 5/8"x3/4", 3/4" or 1" Meter Size

Ford 70 series Coppersetters are designed to be a complete, ready-made meter setting. They require only two pipe joints to install and will connect to horizontal service lines. 70 Series Coppersetters are made in various heights to place the meter at the proper elevation for convenient reading and servicing. Correct hydraulic design assures minimum pressure loss; copper and brass construction provides a lifetime of satisfactory service.

To order: Select one catalog number component from each of the three charts on pages 8 and 9 to arrive at the complete Coppersetter catalog number. Selection order of components:

1. Meter size and valve type . . . . . page 8
2. Coppersetter height . . . . . page 8
3. Service line connections . . . . . page 9

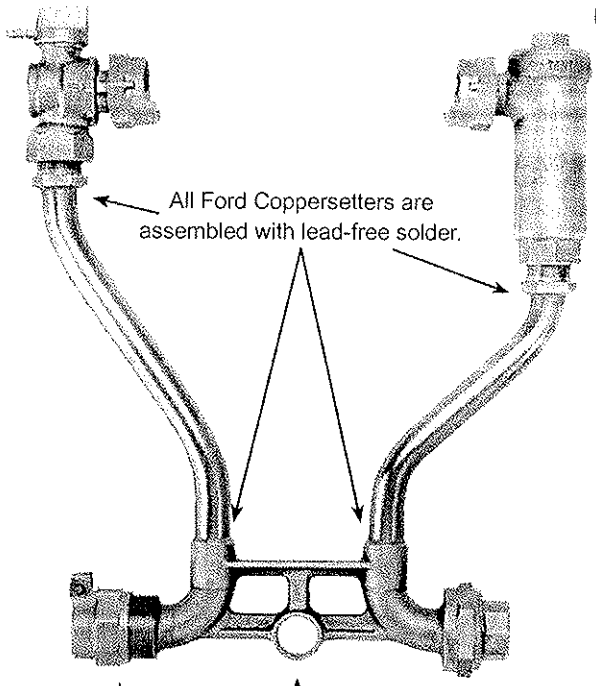

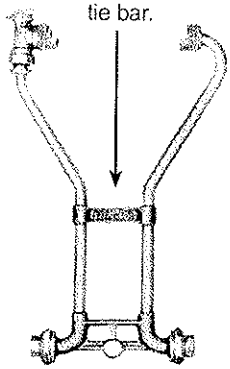

The largest variety of service line connections from the industry's broadest line. Compression, flared, threaded and double purpose couplings for copper, iron, polyethylene, and PVC.

70 AND 270 SERIES COPPERSETTER TIE BAR USAGE

Coppersetter Height	Meter Size			
	5/8", 5/8"x3/4", & 3/4"		1"	
	Without *HHCA	With *HHCA	Without *HHCA	With *HHCA
15" & Under	NO	NO	NO	NO
18"	YES	NO	NO	NO
21"	YES	YES	YES	NO
24" thru 39"	YES	YES	YES	YES
42" and higher	YES (2)**	YES (2)**	YES (2)**	YES (2)**

* HHCA represents a cartridge style dual check valve, which is designated with an "HC" in the coppersetter catalog number.
Example: VHC72-15W-44-33.
** The second tie bar is an extra cost.

The Ford 70 Series Coppersetter

For 5/8", 5/8"x3/4", 3/4" or 1" Meter Size

Example of Catalog Number for a 70 Series Coppersetter

FIRST PART OF NUMBER (METER SIZE AND VALVE TYPE)

SECOND PART OF NUMBER (COPPERSETTER HEIGHT)

THIRD PART OF NUMBER (SERVICE LINE CONNECTION TYPE & SIZE)

VBHC72-12W-41-33

- Angle Ball Meter Valve on inlet
- Cartridge Angle Dual Check on outlet
- 70 Series Coppersetter
- For 5/8 x 3/4" Meter Only
- Riser height is approximately 12" from center line of the service line to center line of the meter spud
- (Brace Eye is Standard on all 70 Series Coppersetters)
- 3/4" Outlet Service Line Connection
- 3/4" Inlet Service Line Connection
- Double Purpose Union Swivel Outlet Service Line Connection
- Pack Joint for CTS Inlet Service Line Connection
- Angle Meter Ball and Key Valves are ***with*** Padlock Wing – Compression valve ***without*** Padlock Wing

The description for the above catalog number reads: 70 Series Coppersetter for 5/8" x 3/4" meter with an Angle Ball Meter Valve on the inlet, Cartridge Angle Dual Check on the outlet, 12 inches high, with 3/4" Pack Joint for CTS inlet by 3/4" double purpose union swivel outlet.

Catalog Numbering

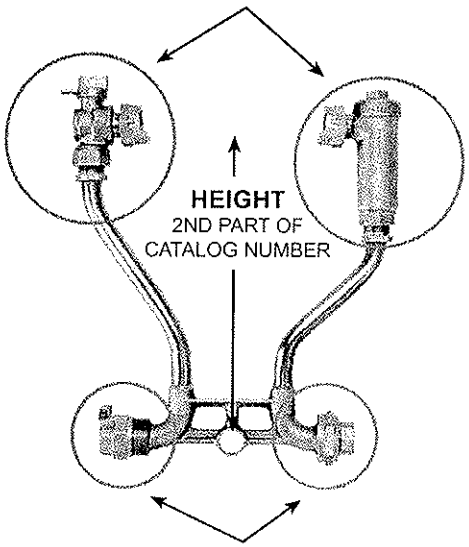

Dimensions

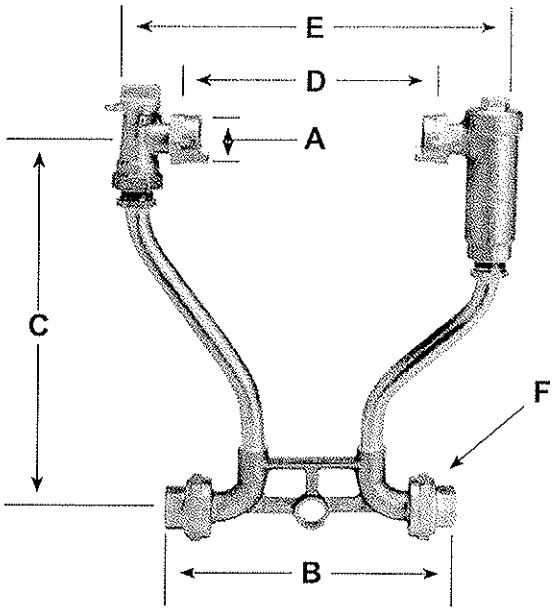

Dimensions	Meter Sizes			
	5/8"	5/8" x 3/4"	3/4"	1"
A	1-1/16"	1-5/16"	1-5/16"	1-5/8"
B	9-1/2"	9-1/2"	11"	12-3/4"
C	Heights as ordered in all sizes			
D	7-1/2"+3/8"	7-1/2"+3/8"	9"+3/8"	10-3/4"+3/8"
E	12"	12"	14-1/4"	17-1/4"
F	3/4"	3/4"	3/4"	1"

The Ford 70 Series Coppersetter

For 5/8", 5/8"x3/4", 3/4" or 1" Meter Size

METER SIZE & VALVE TYPE - (FIRST PART OF CATALOG NUMBER)

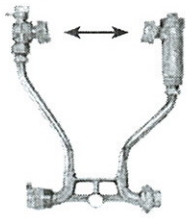

Catalog Number (Meter Size and Valve Type)				Description (Meter Connection)	
For 5/8"	For 5/8"x 3/4"	For 3/4"	For 1"	Inlet Valve	Outlet Valve
71	72	73	74	none	none
V71	V72	V73	V74	Key	none
VB71	VB72	VB73	VB74	Ball	none
VV71	VV72	VV73	VV74	Key	Key
VVG71*	VVG72*	VVG73*	VVG74*	Key	Compression
VH71	VH72	VH73	VH74	Key	Single check
VHH71	VHH72	VHH73	VHH74△	Key	Dual check
VHC71**	VHC72**	VHC73**	VHC74**	Key	Cartridge dual check
VBG71*	VBG72*	VBG73*	VBG74*	Ball	Compression
VBH71	VBH72	VBH73	VBH74	Ball	Single check
VBHH71	VBHH72	VBHH73	VBHH74△	Ball	Dual check
VBHC71**	VBHC72**	VBHC73**	VBHC74**	Ball	Cartridge dual check

* Compression valve does not have padlock wing.
△1" Angle Cascading Dual Check Valves contain 3/4" internal components.

Note: Setters with angle ball valve will be reduced port unless otherwise requested. Reduced port valves usually provide suitable water flow. (Add "-FP" to end of catalog number for full port.)

METER VALVE OPTIONS FOR 70 SERIES COPPERSETTERS

Seal Wire Hole in Inlet Valve
Seal Wire Hole in Check Valve

HEIGHT - (SECOND PART OF CATALOG NUMBER)

NOTE: Height dimensions are approximate.

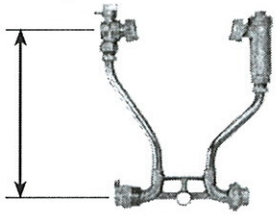

For 5/8" and 5/8"x3/4" Meter

Catalog Number	Height in Inches
7W	7
9W	9
12W	12
15W	15
18W	18
21W	21
24W	24

For 3/4" Meter

Catalog Number	Height in Inches
8W	8
12W	12
15W	15
18W	18
21W	21
24W	24

For 1" Meter

Catalog Number	Height in Inches
10W	10
12W	12
15W	15
18W	18
21W	21
24W	24

Note: **70 Series Coppersetters with cartridge dual check valve have a 9" minimum height for 5/8" and 5/8" x 3/4" meters, 12" minimum height for 3/4" meters and 15" minimum height for 1" meters.

Note: See table on page 6 for Tie Bar usage.

HEIGHT OPTION FOR 70 SERIES COPPERSETTERS

Coppersetters are available in heights over 24" in 3" increments; 27", 30", 33" etc. To order put desired height in catalog number.
EXAMPLE: V72-33W-11-33 is a 33" high setter.

The Ford 70 Series Coppersetter

For 5/8", 5/8"x3/4", 3/4" or 1" Meter Size

INLET & OUTLET SERVICE LINE CONNECTIONS - (THIRD PART OF CATALOG NUMBER)

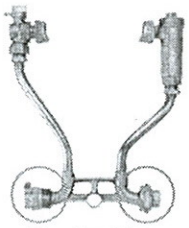

Service Line Connections

Catalog Number	Description	
	Inlet Connection	Outlet Connection
Pack Joint by Pack Joint		
♦ 44-33	3/4" P.J. for Copper or Plastic Tubing (CTS)*	3/4" P.J. for Copper or Plastic Tubing (CTS)*
** 44-43	1" P.J. for Copper or Plastic Tubing (CTS)*	3/4" P.J. for Copper or Plastic Tubing (CTS)*
♦** 44-44	1" P.J. for Copper or Plastic Tubing (CTS)*	1" P.J. for Copper or Plastic Tubing (CTS)*
** 46-33	3/4" P.J. for Copper or Plastic Tubing (CTS)*	3/4" P.J. for PE Pipe*
** 46-44	1" P.J. for Copper or Plastic Tubing (CTS)*	1" P.J. for PE Pipe*
** 47-33	3/4" P.J. for Copper or Plastic Tubing (CTS)*	3/4" P.J. for PVC Pipe
** 47-44	1" P.J. for Copper or Plastic Tubing (CTS)*	1" P.J. for PVC Pipe
♦** 66-33	3/4" P.J. for PE Pipe*	3/4" P.J. for PE Pipe*
** 66-44	1" P.J. or PE Pipe*	1" P.J. for PE Pipe*
** 67-44	1" P.J. for PE Pipe*	1" P.J. for PVC Pipe
** 76-44	1" P.J. for PVC Pipe	1" P.J. for PE Pipe*
** 77-33	3/4" P.J. for PVC Pipe	3/4" P.J. for PVC Pipe
** 77-44	1" P.J. for PVC Pipe	1" P.J. for PVC Pipe
Pack Joint by Iron Pipe and Double Purpose		
♦ 14-33	3/4" Double Purpose Union Swivel	3/4" P.J. for Copper or Plastic Tubing (CTS)*
** 16-33	3/4" Female Iron Pipe Union Swivel	3/4" P.J. for PE Pipe*
17-33	3/4" Female Iron Pipe Union Swivel	3/4" P.J. for PVC Pipe
♦ 41-33	3/4" P.J. for Copper or Plastic Tubing (CTS)*	3/4" Double Purpose
** 41-43	1" P.J. for Copper or Plastic Tubing (CTS)*	3/4" Double Purpose Union Swivel
♦*** 41-44	1" P.J. for Copper or Plastic Tubing (CTS)*	1" Double Purpose Union Swivel
♦ 48-33	3/4" P.J. for Copper or Plastic Tubing (CTS)*	3/4" Male Iron Pipe Union Swivel
♦** 48-34	3/4" P.J. for Copper or Plastic Tubing (CTS)*	1" Male Iron Pipe Union Swivel
** 48-44	1" P.J. for Copper or Plastic Tubing (CTS)*	1" Male Iron Pipe Union Swivel
** 4F-44	1" P.J. for Copper or Plastic Tubing (CTS)*	1" Female Iron Pipe Swivel
** 6F-44	1" P.J. for PE Pipe	1" Female Iron Pipe Swivel
** 7F-44	1" P.J. for PVC Pipe	1" Female Iron Pipe Swivel
4M-33	3/4" P.J. for Copper or Plastic Tubing (CTS)*	3/4" Integral Male Iron Pipe Thread
** 61-33	3/4" P.J. for PE Pipe*	3/4" Female Iron Pipe Union Swivel
*** 61-44	1" P.J. for PE Pipe *	1" Double Purpose Union Swivel
** 71-33	3/4" P.J. for PVC Pipe	3/4" Double Purpose Union Swivel
*** 71-44	1" P.J. for PVC Pipe	1" Double Purpose Union Swivel
** 78-33	3/4" P.J. for PVC Pipe	3/4" Male Iron Pipe Union Swivel
♦ 84-33	3/4" Male Iron Pipe Union Swivel	3/4" P.J. for Copper or Plastic Tubing (CTS)*
Double Purpose, Iron Pipe and Flare Copper		
11-33	3/4" Double Purpose Union Swivel	3/4" Double Purpose Union Swivel
11-44	1" Double Purpose Union Swivel	1" Double Purpose Union Swivel
*** FF-55	1-1/4" Female Iron Pipe Union Swivel	1-1/4" Female Iron Pipe Union Swivel
12-44	1" Double Purpose Union Swivel	1" Flare Copper
18-33	3/4"Double Purpose Union Swivel	3/4" Male Iron Pipe Union Swivel
18-44	1" Double Purpose Union Swivel	1" Male Iron Pipe Union Swivel
21-33	3/4" Flare Copper	3/4" Double Purpose Union Swivel
21-44	1" Flare Copper	1" Double Purpose Union Swivel
22-33	3/4" Flare Copper	3/4" Flare Copper
22-44	1" Flare Copper	1" Flare Copper
28-44	1" Flare Copper	1" Male Iron Pipe Union Swivel
81-33	3/4"Male Iron Pipe Union Swivel	3/4" Double Purpose Union Swivel
81-43	1" Male Iron Pipe Union Swivel	3/4" Double Purpose Union Swivel
81-44	1" Male Iron Pipe Union Swivel	1" Double Purpose Union Swivel
82-44	1" Male Iron Pipe Union Swivel	1" Flare Copper
88-33	3/4" Male Iron Pipe Union Swivel	3/4" Male Iron Pipe Union Swivel
88-44	1" Male Iron Pipe Union Swivel	1" Male Iron Pipe Union Swivel
*** 88-55	1-1/4" Male Iron Pipe Union Swivel	1-1/4" Male Iron Pipe Union Swivel
** FF-33	3/4" Integral Female Iron Pipe	3/4" Integral Female Iron Pipe
FF-44	1" Female Iron Pipe Union Swivel	1" Female Iron Pipe Union Swivel
MM-33	3/4" Integral Male Iron Pipe	3/4" Integral Male Iron Pipe
*** MM-44	1" Integral Male Iron Pipe	1" Integral Male Iron Pipe
*** MM-55	1-1/4" Integral Male Iron Pipe	1-1/4" Integral Male Iron Pipe
*** MM-66	1-1/2" Integral Male Iron Pipe	1-1/2" Integral Male Iron Pipe

NOTE: Ford Pack Joints for PVC are recommended for Schedule 40 and Schedule 80 pipe only.

* Grip Joint for CTS (all sizes) and P.E. pipe (3/4" & 1") is available. Add "-G" to the catalog number. Example: V72-12W-41-33-G

** These couplings are NOT available on 3/4", V73 Series Coppersetters (with 15/16" O.D. copper tubing). Use V72 Series with 3/4" meter spacing.

*** These connections are available on 1", V74 Series Coppersetters only.

♦ Quick Joint is available. Add "-Q" to the end of this catalog number. The 1" Quick Joint Connections are for 1" Meter Setters only.

8A.6 Mueller Co.

COPPER METER YOKES WITH HORIZONTAL INLET AND OUTLET

8A - COPPER YOKES

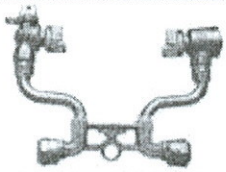

MUELLER® 110 Conductive Connection ends (P-2543-2A)

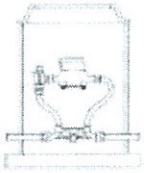

Typical installation of a horizontal inlet and outlet copper meter yoke

Copper meter yokes with horizontal inlet and outlet, and Mueller Pack Joint Connection ends for IPS PE

Catalog number	P-1540	P-1541	P-1542	P-1543	P-2542	P-2543
Description	Plain yoke	With test valve	With lock wing ground key angle meter stop	With lock wing ground key angle meter stop and test valve	With lock wing MUELLER 300™ Angle Meter Ball Valve®	With lock wing MUELLER 300 Angle Ball Valve® and test valve

M-98™ ASSE approved top entry vertical check valve

Check valve options

MUELLER Copper Meter Yokes can be ordered with one of the following: an ASSE approved top entry vertical check valve; an ASSE approved dual check valve; a dual check valve (ASSE non-approved). To order the ASSE approved top entry check feature, add a suffix of **-6A** to the yoke catalog number; add **-6D** for the same check with a test drain. For the dual check feature, add a suffix of **-2A** to the yoke catalog number for the ASSE approved model or **-2** suffix for the nonapproved model. Examples:

P-1540-6D for the ASSE approved top entry vertical check with a test drain;
P-1540-2A for the ASSE approved model angle dual check valve.

Angle dual check valve

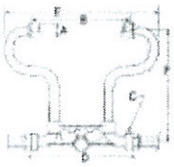

Dimensions

Meter size	5/8"	5/8" x 3/4" *	3/4" *	1" *
Nominal size of UP thread in meter nut	3/4"	1"	1"	1-1/4"
Dimension A	1-1/16"	1-5/16"	1-5/16"	1-5/8"
Dimension B	2-7/8"	2-7/8"	9-3/16"	11-1/16"
Dimension C - nominal pipe size of inlet and outlet	3/4"	3/4"	3/4"	1"
Dimension D	7-15/16"	7-15/16"	9-3/8"	11-1/8"
Dimension E	12-5/8"	12-5/8"	14-3/4"	17-3/4"
Dimension F - minimum riser height	7" (8" **)	7" (8" **)	8" (10" **)	10" (12" **)
Other riser heights available	9", 12", 15", 18", 21", 24", 27", 30", 33", and 36"	9", 12", 15", 18", 21", 24", 27", 30", 33", and 36"	12", 15", 18", 21", 24", 27", 30", 33", and 36"	12", 15", 18", 21", 24", 27", 30", 33", and 36"

* Add "R" to the end of the yoke catalog number to order a reduced port Angle Ball Valve; EXAMPLE: 98ch3ts7 F-24506.
** Minimum with 6A or 6D options.

Copper Meter Yokes are normally supplied less end connections. See pages 8A.41 and 8A.42 for end connections that can be used with these yokes.

Note: the 5/8", 5/8" x 3/4" and 3/4" sizes are threaded with a tie bar on heights greater than 15". The 1" size is threaded with a tie bar on heights greater than 18".

SPECIFY METER SIZE, RISER HEIGHT AND CATALOG NUMBER.

Granite Falls
Development Guidelines for 2008 Public Works Standards
Errata Sheet

1. May 1, 2008 – Clarify "**Agreement for Inspection and Maintenance of Privately Maintained Storm Drainage Facilities**". Following changes made to the agreement.
   - In No 1 Replace Exhibit A with "… the City approved construction plans or City approved changes thereto …" and replace Schedule, Exhibit B with "…Standards in Volume 4 of the 2005 WDOE Stormwater Management Manual for Western Washington."
   - In No. 2 replace in accordance with the, with "… maintain an…" and replace and log with "…showing...".
   - In No 4 (4th) line delete described above and replace seven with "30".
   - In No. 6 (2nd) line "poses a hazard to life and limb," delete to life and limb.
   - Page 3 – Changed date form 2000 to 20__.
     Minor revision as this is covered in WDOE 2005 Manual. Change for purposes of clarity.

2. May 20, 2008 - Revise Page 2 of 2 for Detail 1-WAT to clarify meter setter part number callout.
   Minor Revision.

3. July 29, 2008 – Minor revisions in wording to Performance and Maintenance Bonds.